D.I.D

ALL PRODUCTS GUIDE

POWER TRANSMISSION &
CONVEYOR CHAIN

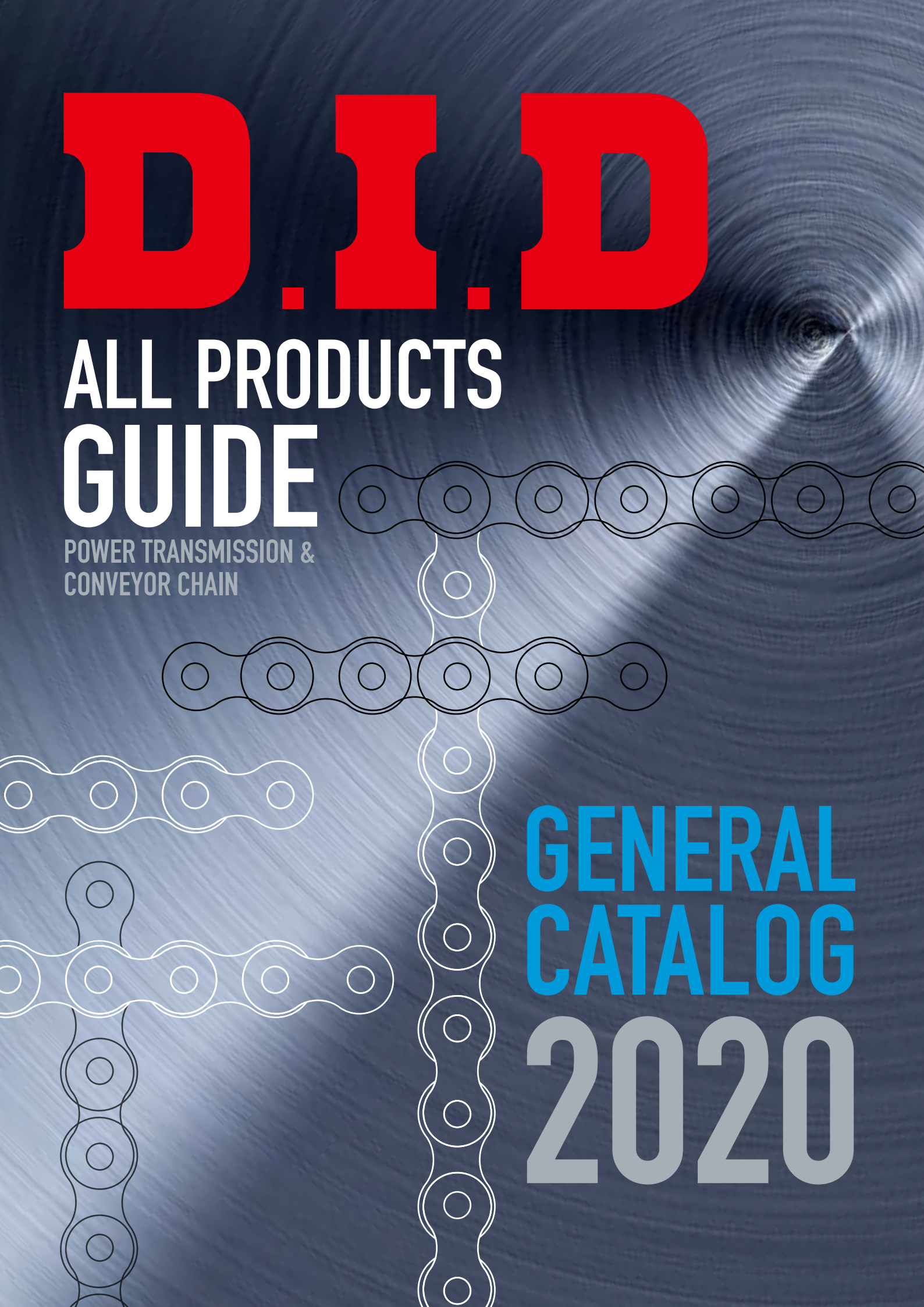

GENERAL CATALOG 2020



DRIVEN TO SOLUTIONS
The D.I.D Brand

Known for its Durability and Dependability in Design.

An established technical innovator in the world chain drive market,

serving a broad spectrum of industries with quality products

for over 80 years. That is D.I.D.

Our technology turns timely ideas into productive realities.

D.I.D a professional partnership you can count on

for your optimum drive system solutions.

DID is a brand you can depend on.

Certified Management System in Conformity with World Standards

Quality assurance and environmental management system authorized by domestic and overseas standards.

DID's Quality Assurance

- Customer satisfaction is our priority.
- All DAIDO members are committed to quality.
- Quality control based on facts is assured.

With activities based on these quality policies, our quality assurance system is internationally authorized to state that our products conform to the ISO9000 series.



All of our employees keep a copy of our "Quality Control Practice Manual" at hand as their bible of quality control and refer to it during routine activities.





ISO9001/2015 Certification

It is indispensable to obtain the certification of ISO9001 for supplying products to overseas markets - not only Europe and the US but also other countries. Our entire production system, including design, development, manufacturing, installation and technical assistance for all of our products including various chains, conveyor systems and welfare equipment, has been certified by the Japan Quality Assurance Organization (JQA).

ISO14001/2015 Certification

ISO14001 was established in 1996 by the International Organization for Standardization, to set requirements for environmental management systems. In order to preserve the global environment, reverse contamination and enhance the health of human beings and ecosystems, DAIDO declared our policies for environmental preservation. As a result, our management system for our activities, products and service for environmental protection was certified by the organization. We have been engaged in various activities for environmental preservation and improvement, such as reduction of waste and classification of waste for recycling, in accordance with our environmental policies.



Before use, be sure to read
the catalog and instruction manual carefully.
If you find something unclear,
please consult with us.

Cautions for handling of chains and sprockets

Before handling chains and sprockets, please understand the respective structures and specifications correctly, and read the following cautions for using them safely.

How to handle chain when unboxing

When unboxing and installing chain, please pay attention as shown in the pictures below to keep the chain comfortable.

【GOOD】



【WRONG】



1) Don't pull out chain end forcibly as shown in the 【WRONG】 picture when unboxing. It may bend or twist the chain by inappropriate force.
2) Don't throw, drop or swing the chain.

1 Handling of chains and sprockets

For safe work

- Always wear clothes suitable for work and proper protection (safety glasses, safety shoes, etc.).
- In addition to site workers, other people near the work site are also required to be careful.
- Strictly observe Section 1 "General Standards" (prevention of danger by prime movers, revolution shafts, etc.), Chapter 1, Part 2 of Occupational Safety and Health Regulations.
- For working, keep things in order in and around the work site.
- Before installation, be sure to switch off the power.
  Before installing, removing, lubricating or otherwise servicing a chain and sprockets, be sure the main electric power switch and all secondary power switches of the equipment are turned off. Also, take precaution to ensure that power will not be switched on accidentally.
  Furthermore, exercise care to prevent clothing or any part of the body from being caught by a chain, sprocket or other part during work.
- When any lifting apparatus is used, never stand beneath it.

Handling

For handling (See P129 ~ 139 and P323 ~ 336.)

- For handling, follow the instructions in this catalog and in the instruction manual. Select, layout, install, adjust and maintain chains and sprockets in the way that is recommended to ensure a high-performance installation.
- When connecting a chain, employ an installation method suitable for the type of connecting link.
- For the layout, installation, adjustment and maintenance, observe both recommended equipment instructions and cautions.

Warning

- Do not partially replace a part of a chain.
  Do not partially exchange a worn or damaged chain and sprockets. Replacing only the worn or damaged part does not restore overall strength and risks further breaking or destruction. Always replace the entire chain and sprockets.
- Do not modify chains or sprockets.
  Most of the components of a chain are heat-treated. If they are reprocessed, strength is diminished and breaking or destruction can result.
- Electroplating may cause hydrogen embrittlement.
- Welding may lower the strength of chains and components due to a flaw or heat, and result in destruction.
- Annealing can lower the performance of products and components and may result in destruction.

2 Chain Installation

Connection

(1) Before installation, please read the previous section (1).
(2) Use connecting links and offset links as described below.
When installing a connecting link or offset link, confirm its construction. (P15)

- For installing the clip on the connecting link, refer to the method illustrated below.

Chain clip installation method



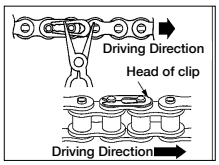

- For installing a cotter pin on the connecting link, refer to the method illustrated below.

Cotter pin installation method

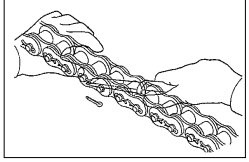

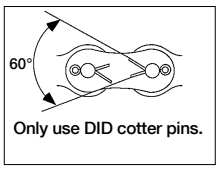

- For installing a spring pin, refer to the method illustrated below. Spring pins are used for interference-fitted connecting links used in DIDHI-PWR-S, HK and HI-PWR-SHK series (P50 ~ 59, P60 ~ 61, P62 ~ 63).

Spring pin installation method for HI-PWR-S series

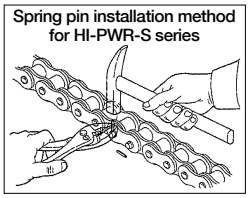

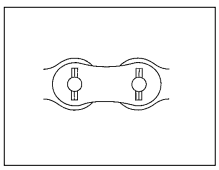

● For installing a T-pin or S-pin, refer to the method illustrated below.

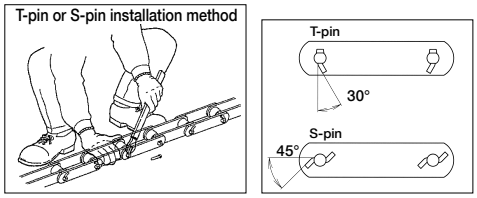

• For installing a one-pitch offset link, follow the installation method for the cotter pin type connecting link, and for installing a two-pitch offset link, follow the installation method of the connecting link used.

For other special types of connecting links, please consult us.

Warning

- Do not attempt to modify any components. When assembling, never drill a hole on a connecting plate to make it larger and never file a pin to make it thinner for smooth insertion of the pin into the connecting plate.
- Do not use used chains. Do not reuse clips and do not install a used cotter pin, connecting link or any other component for a new chain.

Adjustment (3) For proper operation of a chain, install and adjust it correctly. (See P129 ~ 139 and P335 ~ 337.)

Confirmation (4) After installing a chain and sprockets, confirm the following before switching on the power:

- Is the connecting link correctly and securely connected?
- Is the chain engaged with the teeth of the sprockets?
- Is the amount of lubrication proper?
- Is anything likely to cause interference or be scattered?
- Is the safety cover correctly installed?
- Is there anything interfering with the safety cover?
- Whether or not there is anything interfering with the chain.
- If there is anything abnormal about the connecting link portion, etc. and whether the respective components of the chain are flawed, rusty or abnormal in any other way.
- Do not stay in the rotation direction of the chain.

(5) If any abnormal noise is generated after switching on the power, switch off the power and re-confirm.

Avoidance of Danger

- Install a safety cover. For the apparatus with a chain and sprockets installed, be sure to install a safety cover. Any unexpected fracture may cause the chain to be thrown from the sprockets. In addition to a sufficient protector, install a stopping device such as an overload limit switch or brake so as not to cause overload.
- Check for chain interference. Any obstacle which interferes with a driven chain and sprockets is dangerous and shortens the life of the chain and sprockets. Always check for any interfering objects, and remove them.

3 Maintenance

To prevent any serious accident caused by a chain and sprockets, and to prolong the life of the chain and sprockets, take the following maintenance actions:

Lubrication (1) Lubrication (See P.134 ~ 136 and P.342.)
Except for some chains of special materials or elements, most chain life can be prolonged with lubrication. A chain which requires lubrication will be shortened in life without lubrication. For example, chain elongation, corrosion and stiff joint occur due to wear of some chain parts.

Washing (2) Washing
If a chain is used with a material such as sand or metallic powder, the promotion of wear, stiff joint, etc. will be caused, shortening life. Wash away such harmful materials.
For washing, dip the chain into kerosene, dry, and sufficiently lubricate. However, in the case of O-ring chain, since the O-ring may be deteriorated by kerosene, do not dip it for more than 10 minutes.
For washing, do not use an acid, alkali, gasoline or highly volatile solvent detrimental to the chain and sprockets. For an O-ring chain, do not use a wire brush.

Adjustment (3) Adjustment of tension and timing of exchange (See P132 ~ 133, P139 and P336 ~337.)
Chains and sprockets are consumable products.
The wear of a chain and sprockets causes sag on the chain. Periodically check the chain for sag, and adjust the tension to the optimum condition.
If a chain and sprockets show any rust or harmful flaw in appearance, or if the elongation of a chain or the wear of a sprocket becomes critical, immediately replace them.

- Do not use an offset link for lifting.
- Excessive oil on the chain will cause fouling by scattering. Wipe off extra oil to prevent it from scattering.
- For washing, do not use gasoline or highly volatile solvent. Furthermore, do not allow any material containing acid or alkali to come in contact with it.

4 Others

Even chains of the same kind and size have a different service life depending on the service environment, numbers of teeth of the sprockets, lubrication and other conditions. This also applies to the life of sprockets. Chains and sprockets are different in wear life. If a new chain is used on an old sprocket with worn teeth, failure or rupture of the chain may occur.
When a chain or sprocket must be replaced, replace both the chain and sprockets.

If anything remains unclear, please consult us.

INDEX

1 Roller Chains for Power Transmission

General — 12
Standard Roller Chain — 18
Ultimate Power Chain Series
- Strong chains suitable for use in various conditions — 48
- HI-PWR-S Type Roller Chains — 50
- HK Type Roller Chains — 60
- HI-PWR-SHK Type Roller Chains — 62

Ultimate Life Chain Series
- Dependable in severe conditions — 64
- Wide range of product line-up — 66
- O-Ring Chain (LD)/X-Ring Chain (LX) (LF) — 68
- BS X-ring Chain — 70
- Sintered Bushing Roller Chain (UR/ URN) — 74

Environment Resistant Chain Series
- Applicable for many different environments — 80
- Nickel Plated Chain (N) — 82
- Hi-Guard Chain (E) — 84
- Double Guard Chain (WG) — 86
- Stainless Steel Chain (SS/SSK) — 88
- SN Treatment Chain — 90
- Stainless Steel X-Ring Chain (SSLT) — 92
- Low-Temperature Resistant Chain (TK) — 94

Low Noise Chain Series
- Unparalleled noise reduction — 96
- Super Low Noise Chain (UN) — 98

Specialty Chain Series
- Responding to various kind of needs — 100
- Bicycle Chain — 103
- Agricultural Roller Chain — 104
- BS Roller Chain (British Standard Roller Chain) — 105
- Leaf Chain — 106
- Oil Field RiG-REDi Chain — 108

Related Products
- Roller Chain Coupling — 112
- DID C-Top (Chain Cover) — 115

Sprocket — 116
Designing of Chain Transmission
- How to Select the Proper Chain — 122
- Chain Selection by Temperature — 126
- Chain Length and Sprocket Center Distance — 127
- Layout — 128

Maintenance
- Installation — 129
- Maintenance — 132
- Lubrication — 134
- Troubleshooting Guide — 136
- Timing for Replacement — 139

2 Small Conveyor Chains

General — 142
Single Pitch Chain
- Standard Conveyor Chain with Attachments Series (Single Pitch) — 144
- Standard Attachments — 146
- Standard Roller Chain — 148
- X-Ring/O-Ring Chains (LX), (LD), (LXN), (LDN) — 150
- Sintered Bushing Roller Chain (UR/URN) — 152
- Nickel Plated Chain (N) — 154
- High Guard Chain (E) — 156
- Double Guard Chain (WG) — 158
- Stainless Steel Chain (SS/SSK) — 160
- Stainless Steel X-Ring Chain (SSLT) — 162
- Low Temperature Resistant Chain (TK) — 164

Double Pitch Chain
- Conveyor Chain with Standard Attachments Series (Double Pitch) — 166
- Double Pitch Chain and Sprockets — 168
- Sprockets for Double Pitch Chain — 170
- Standard Attachments — 172
- Standard Roller Chain — 174
- X-ring Chain — 176
- Sintered Bushing Roller Chain (UR/URN) — 178
- Nickel Plated Chain (N) — 180
- High Guard Chain (E) — 182
- Double Guard Chain (WG) — 184
- Stainless Steel Chain (SS/SSK) — 186
- Stainless Steel X-Ring Chain (SSLT) — 188

Free Flow Chains and Other Conveyor Chains
- DID Free Flow Chains and Other Conveyor Chains — 190
- Single Pitch Top Roller Chain — 192
- Double Pitch Top Roller Chain — 194
- Overturn Prevention Type Top Roller Chain — 196
- Top Roller Chain Overturn Prevention Series (Double Pitch) — 197
- Side Roller Chain — 198
- Side Roller Chain Series (Double Pitch) — 198
- Side Roller Chain Meandering Prevention Series (Double Pitch) — 199
- Free Flow Chain with Breaks — 200
- Hollow Pin Chain — 202
- Flexible Chain — 203
- Flat Type Roller Chain — 204

Technical Information
- Calculation of Chain Tension — 206
- Strength of Loaded Components — 209
- Inquiry Sheet — 210

3 Conveyor Chains

Outline of Conveyor Chains
- Classification — 212
- Construction and Components of DK Conveyor Chains — 213
- How to Order DK Conveyor Chains — 214

Standard Conveyor Chain
- Variation of DK Regular Conveyor Chain — 215
- Roller Type — 216
- Classified by Material and Heat Treatment — 217
- Classification by Surface Treatment — 218
- Chain Specifications — 219
- Dimensional Drawings (for Metric series) DK03 — 220
  DK07 — 221
  DK09 — 222
  DK11 — 223
  DK13 — 224
  DK19 — 225
  DK25 — 226
  DK32 — 227
  DK50 — 228
  DK65 — 229
- Dimensional Drawings (for Inch series) DK05 — 230
  DK08 — 231
  DK09 — 232
  DK11 — 233
  DK13 — 234
  DK19 — 235
  DK25 — 236

Anti-seizing Roller Conveyor Chain
- Anti-seizing Roller Conveyor Chain — 237
- Dimensional Drawings (for Metric series) DK03 — 238
  DK07 — 239
  DK09 — 240
  DK11 — 241
  DK13 — 242
  DK19 — 243
  DK25 — 244
  DK32 — 245
  DK50 — 246
  DK65 — 247
- Dimensional Drawings (for Inch series) DK05 — 248
  DK08 — 249
  DK09 — 250
  DK11 — 251
  DK13 — 252
  DK19 — 253
  DK25 — 254

Bearing Assembled Roller Conveyor Chain
- Bearing Assembled Roller Conveyor Chain — 255
- Dimensional Drawings (for Metric series) DK11 — 256
  DK13 — 257
  DK19 — 258
  DK25 — 259
  DK32 — 260
  DK50 — 261
- Dimensional Drawings (for Inch series) DK11 — 262
  DK19 — 263
  DK25 — 264

Seal Chain
- Seal Chains — 265
- Dimensional Drawings (Seal Chains) — 266

Strong H-type and Z-type Conveyor Chain
Strong H-type and Z-type Conveyor Chain — 267
Dimensional Drawings (Strong H-type Conveyor Chain) — 268
Dimensional Drawings (Strong Z-type Conveyor Chain) — 269
High Link-Plate Chain — 271
Conveyor Chain with Side Roller — 272
Conveyor Chain with Top Roller — 273

4 DK Specialty Conveyor Chains

Conveyor Chain Exclusive for Specific Conveyance
Conveyor Chain with Attachments for Conveying Bulk Materials — 274
Continuous Flow Conveyor Chain — 275
Shapes and Indications of Attachments — 276
Chains for Dust Conveyor — 277
Block Chains type dust conveyor — 278
Eco Slight — 279
Chain for Garbage Conveyor — 280
NE Bucket Elevator Chains — 281
NSE Bucket Elevator Chains — 282
Flat Top Type Chain for Coil Conveyor — 283
Long Pan Conveyor Chain — 284
Block Chain — 285
Special Rivetless Chain — 286
Water Treatment Conveyer Chain
Chains for Traveling Water Screen — 287
Rake Chain — 288
Sewage Treatment Chain (WS or WAS Type Chain) — 289
Attachment — 290
WAS Type Bush Chain — 291
BF Type Bushing Chain for Water Treatment Drive Unit — 292
3D Bending Conveyor Chain
X Type Chains for Trolleys, and Power & Free Conveyors — 293
Z-type Chain for Light Load Trolley Conveyors — 294
FH Type Chain for Freeyor — 295
Towline Low-Selec-Tow Chain — 296
Booster Chain for Rivetless Chain — 297
Others
Draw Bench Chain — 298
Access Window (Dr. WINDOW) — 300

5 Photo / Sprocket

Photos of Conveyor Systems and Chains in Use — 302
Photos of Specialty Chains — 307
DK Conveyor Chain Sprocket — 308

6 Technical Information

Chain Selection — 324
Allowable Loads of Rollers and Attachments — 331
Property of Loads and Recommended Chains — 332
Corrosion Resistance Against Various Substances — 333
Rust Prevention of DK Conveyor Chain — 334
Installation, Adjustment and Maintenance — 335
Installation of Sprockets, Conveyor Chain Connection Procedure — 335
Tension Adjustment of Conveyor Chain — 336
Lubrication, Service limit of conveyor chain — 337
Inquiry Sheet — 338
Glossary — 339

Keys and Symbols



Dirty or contaminated lubricants or deterioration of lubrication.



Corrosive atmosphere (by CAS test).



Sandy or dusty environment.



Atmosphere where exposure to rain, moisture, and sea water is present.



Where lubrication is infrequent or prohibited.



Atmosphere where alkaline liquid is present.



Great cost savings can be achieved through longer life and less down time.



Atmosphere where acid liquid is present.



Index of tensile strength (Standard chain is the base line).



Atmosphere where cleanliness is required.



Temperature range in use.



Coating tolerable temperature



Allowable tension index (Standard roller chains)

VENDING MACHINE — As conveyor chain in vending machine.

CONVEYOR — As conveyor and drive chain in conveyance machine.

PARKING — As drive chain in vertical automated parking.

BOOK BINDING — As conveyor and drive chain in book binding machine.

FOOD — As conveyor and drive chain in food processing machine.

WATER TREATMENT — As conveyor and drive chain in water treatment.

PACK — As conveyor and drive chain in packing machine.

CHEMICALS — As conveyor and drive chain in chemical processing equipment.

OUTDOOR — As conveyor and drive chain in outdoor equipment.

TEXTILE — As conveyor and drive chain in textile machine.

PRINT — As conveyor and drive chain in printing machine.

CONST-RUCTION — As drive chain in construction machine.

(etc.)

Index (In alphabetical order)

Product No.	Description	Page
DEC -	Eco Slight (Small Sized Apron Conveyor Chain)	279
DID 1/2×	Bicycle Chain	103
DID	Agricultural Machine Chain	104
DID B	BS Roller Chain (ANSI-B Type)	105
DID BF,DID BFH	BF Bushing Chain	292
DID E	Hi-Guard Chain	84・156・182
DID F	Flat Plate Type Roller Chain	204
DID FX	Flexible Chain	203
DID HK	HK Roller Chain	60～61
DID HP	Hollow Pin Chain	202
DID LD,DID LX,DID LF	O-Ring/X-Ring Chain	68・150・176
DID N	Nickel Plated Chain	82・154・180
DID RR	Oil Field RIG REDi Chain	108
DID -SR-	Side Roller Chain	198
DID -SRB-	Side Roller Chain with Brake	201
DID SS	Stainless Steel Chain	88・160・186
DID SSK	Stainless Steel Chain	88・160・186
DID SN	SN Treatment Chain	90
DID SSLT	Stainless Steel X-Ring Chain	92・162・188
DID TK	Low-Temperature Resistance Chain	94・162
DID -TR-	Top Roller Chain	192
DID -TRB-	Top Roller Chain with Brake	200
DID UN	Super Low Noise Chain	98
DID UR	Sintered bushing roller chain	74・152・178
DID URN	Sintered bushing roller chain (Plated)	74・152・178
DID WG	Double Guard chain	86・158・184
DID -A,B,BW,C	Double Pitch Chain Sprocket	170
DID -A,B,BW,C	DID Roller Chain Sprocket	19～47・116
DID AL	AL Leaf Chain	106
DID BL	BL Leaf Chain	106
DID C	Double Pitch Chain	166
DID C-	Roller Chain Coupling	112
DID CT-	DID C-TOP (Chain Cover)	115
DID HI-PWR-S	HI-PWR-S Roller Chain	50
DID HI-PWR-S HK	HI-PWR-S HK Roller Chain	62
DK	NE Bucket Elevator Chain	281
DK	NSE Bucket Elevator Chain	282
DK	Apron Conveyor Chain	279
DK	Continuous Flow Conveyor Chain	275
DK	Chain for Dust Conveyor	277
DK	Replacement Sprocket Tooth	322
DK	Rake Chain	288
DK -	Long Pan Conveyor Chain	282
DK BR,DK BF	Bearing Roller Conveyor Chain	255～264
DK UF	Chain for Garbage Conveyor	280
DK UR,DK UF	Anti-seizing Roller Conveyor Chain	237～254
DK H	DK strong H Conveyor chain	268
DK Z	DK strong Z Conveyor Chain	269～270

Product No.	Description	Page
DK -A,B,BW,C	DK Conveyor Chain Sprocket	308
DK B	Block Chain	285
DK -SR	Conveyor Chain with Side Roller	272
DK -TR	Conveyor Chain with Top Roller	273
DK V	Sealed Chain	266
DK -A-	DK Standard Conveyor Chain: Standard	217・220～236
DK -C-	DK Standard Conveyor Chain: Wear Resistant	217
DK -D-	DK Standard Conveyor Chain: Wear Resistant	217
DK -D1-	DK Standard Conveyor chain	217
DK -D2-	DK Standard Conveyor chain	217
DK -D3-	DK Standard Conveyor chain	217
DK -D4-	DK Standard Conveyor chain	217
DK -D5-	DK Standard Conveyor chain	217
DK -D6-	DK Standard Conveyor chain	217
DK -E-	DK Standard Conveyor chain	217
DK -K-	DK Standard Conveyor chain	217・220～236
DK -P-	DK Standard Conveyor chain	217
DK -S3-	DK Standard Conveyor chain	217
DK -S4-	DK Standard Conveyor chain	217
DK -S5-	DK Standard Conveyor chain	217
DK -SH-	DK Standard Conveyor chain	217
DK 100-152	Special Rivetless Chain	286
DK FH-	FH Chain for Versatile Uses	295
DK L..S.T 6	Towline Low-selec-tow Chain	296
DK WAS	WAS Busing Chain	291
DK WS	WS Roller Chain	289
DK X	X-type Chains for Power Trolley & Free Conveyors	293
DK Z-	Z-type Chain for Light Load Trolley Conveyor	294
DK-BU X	Booster Chain for Rivetless Chain	297
DK-HL	High Link Chain	271
IW ,IWH ,IWD	Access Window (Dr. WINDOW)	300
	Check Gauge	115

memo

1 Roller Chains for Power Transmission

- General
- Standard Roller Chain
- High-strength Roller Chain Series
- Ultimate Life Chain Series
- Environment Resistance Chain Series
- Low Noise Chain Series
- Specialty Chain Series

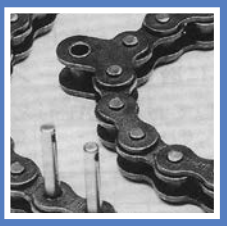







Classification by use		Product No.	Page	Functions									Allowable ambient temperature
				High tension	Wear resistance	Dusty circumstances	Resistant against corrosive gas	Resistant against alkali, acid liquid	Hygiene circumstances	Low noise	High temperature	Low temperature	
Standard Roller Chain		JIS · ANSI	P18~47										-10~80 °C
High-strength Roller Chain Series		HK	P48~63	■									
		HI-PWR-S		■									
		HI-PWR-S HK		■									
Ultimate Life Chain Series		UR	P64~79		■								-10~60 °C
		LX, LD			■	■					■		-10~120 °C
Environment Resistance Chain Series		N	P80~87				■						-10~80 °C
		E					■						
		WG					■						
		SS	P88~93				■	■	■		■		-10~400 °C
		SSK					■	■	■		■		
		SSLT			■	■	■	■	■		■		-10~200 °C
		TK	P94,95									■	-40~80 °C
Low Noise Chain Series		UN	P96~99							■			-10~80 °C
Specialty Chain Series	Bicycle Chain		P100~104										
	Agricultural Roller Chain												
	BS roller Chain	British Standard	P105										
	Leaf Chain	AL	P106										
		BL											

	Main uses																			
	Pack	Textile	Print	Home appliance	Construction	Agriculture	Outdoor	Petrolium	Forestry	Machine	Excavation	Mining	Conveyor	Food	Vending machine	Chemicals	Parking	Water treatment	Chemicals/Medical	Machining
	■	■	■	■																
					■	■		■	■	■										
					■	■	■													
					■						■	■								
	■	■	■	■									■	■						
	■	■	■	■	■	■							■	■	■					
		■	■										■	■		■	■			
		■			■		■						■				■	■		
		■			■		■						■	■		■	■	■	■	
													■	■		■		■	■	
													■	■		■		■	■	
													■	■		■		■	■	
	■				■								■	■						
	■		■										■			■				■
			■	■									■							
					■	■														
	■	■	■			■							■							
					■								■				■			

Dimensions and Performance of DID General Application Chains

DID general application chains can be classified into two types in reference to strength; standard series chains complying with ANSI roller chains and HK series chains complying with ANSI, which have outer and inner plates thicker than those of standard chains.

The standard series include two lines; standard roller chains, and HI-PWR-S chains improved in fatigue strength and shock resistance compared to the standard roller chains. You can use them as basic transmission chains for all applications ranging from low speed to high speed.

The HK series are improved in the strength of plates to allow heavy duty transmission mainly in a low speed range, and include two lines; HK roller chains and HI-PWR-SHK roller chains further enhanced in fatigue strength.

Sprockets

The simplex chains can be engaged with standard sprockets of the corresponding nominal numbers. For sprockets, see P115 ~.

Selection of chains

For selecting a standard roller chain or HI-PWR-S roller chain, refer to "Selection of Chains" (P122). However, only for a special case of low speed and less shock, "Low-speed selection method" (P123) can also be referred to.
For selecting an HK roller chain or HI-PWR-SHK roller chain, refer to "Slow-speed selection" (P123).
For selecting a connecting link or offset link, refer to "General selection". Since selection according to "Slow-speed selection" results in insufficient strength, please consult us.

Number of chain strands and method for connecting outer plates with pins

For the numbers of available strands, refer to the table of "Dimensions" for each size of chain.
The standard method for connecting pins and plates is rivet type (RP).
The cotter type (CP) can be used for standard chains and HK chains of DID80 or larger.
* As for HI-PWR-S chains and HI-PWR-SHK chains, only rivet type (RP) is available.

Connecting links and offset links

For connecting links and offset links, refer to the table of "Dimensions" for each size of chain.

This section describes general application chains only. However, since many kinds of engine mechanism chains and agricultural roller chains are also available, please see the sections describing the respective items.

How to Order Roller Chains for Power Transmission

- When you place an order for DID60LX with 160 links including one RJ type connecting link as a loop:

[Type indication]

DID 60 LX × 160 R E

- DID: DAIDO's product
- 60: Size of chain
- LX: Type of chain (LX indicates an O-ring chain)
- Chain No.: 160
- R: Indicates that the overall length of chain is 160 links.
- E: Type of connecting link
  - Clip type: Clearance fit: R / Interference fit: F
  - Cotter pin type: Clearance fit: C / Interference fit: H
  - Some are inapplicable, depending on the chain size. See the table on P17.

supply of connecting link

- B: Connecting link packed separately
- E: Looped chain with connecting link
- T: Connecting link attached to one end

- When you place an order for DID80CP with 121 links including three offset links and one CJ type connecting link as a straight chain.

DID 80 CP × 117LL + OJ × 3 + CJ +

- DID 80: Chain No.
- CP: Method for connecting pins and plates. Rivet: RP. Cotter pin: CP. No expression means RP.
- 117LL: Indicates that the number of inner links from one end to the other end of a chain is 117.
- OJ × 3: Indicates that 3 offset links (OJ) are required.
- CJ: Indicates a CJ type connecting link.
- +: If the components stated before and after this symbol position are to be connected when the chain is delivered, [+](plus) sign is used, and if not connected, [,](comma) sign is used.
- +: This symbol means that the last link is connected with the first link (to form a loop).

See the table on P17 for the kinds of connecting and offset links.

- When you place an order for a cotter type connecting link of DID80, in which the pins are clearance-fitted with the upper plate:

DID 80 · C J

- DID 80: Chain No.
- C: Type of connecting link
- J: Indicates a connecting link.

- When you place an order for an offset link of DID60:

DID 60 · OJ

- DID 60: Chain No.
- OJ: Indicates an offset link. One-pitch type: OJ. Two-pitch type: 2POJ

- When you place an order for a cotter type connecting link of DID80HK, in which the pins are interference-fitted with the upper plate:

DID80HK · H J

- DID80HK: Chain No.
- H: Type of connecting link
- J: Indicates a connecting link.

Construction and Components of Chain

A roller chain has a structure as illustrated below, and the names of the components are stated in the drawing. These components act as described below, and are designed to suit the respective actions.

Components	Pin	Pins support all the load acting on the chain, together with inner and outer plates, and when the chain is engaged with a sprocket, the pins slide as bearings. They are required to be high in shearing strength and bending strength, and especially wear resistance.
	Bushing	Bushings act to prevent the shock received through rollers when the chain is engaged with a sprocket from being directly transmitted to pins, and also act as bearings, along with the pins. So, they are required to be high in shock fatigue strength and wear resistance.
	Roller	Rollers act to smoothly bend the chain when the chain is engaged with a sprocket, to protect the chain from shock with the sprocket. They are required to be high in shock fatigue strength, collapse strength and wear resistance.
	Plate	Plates are subject to repeated tension of the chain, and sometimes a large shock. So, they are required to be high in tensile strength, and also in shock resistance and fatigue strength.

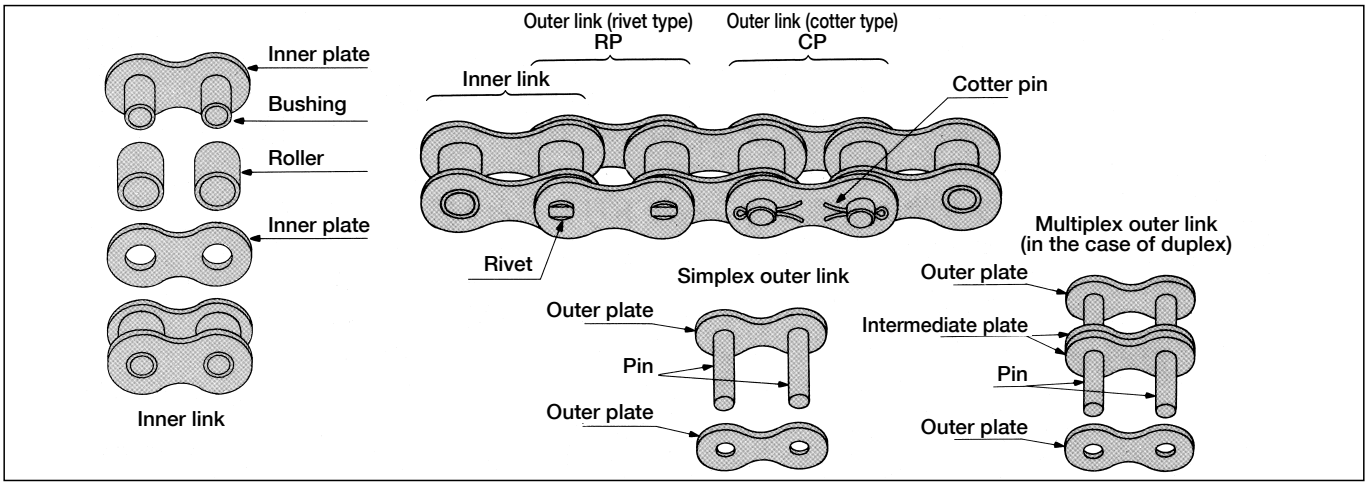

Connecting links

The following four types of connecting links are available (RJ, FJ, CJ and HJ).

Clip type connecting link



Clip type connecting link which the connecting pins are clearance-fitted with the connecting plate is called **RJ** type connecting link and interference-fitted type is called **FJ** type connecting link.

Cotter pin type connecting link

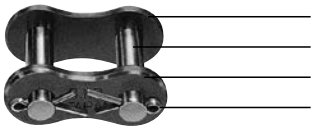

Cotter type connecting link which the connecting pins are clearance-fitted with the connecting plate is called **CJ** type connecting link and interference-fitted type is called **HJ** type connecting link.

Spring pin type connecting link

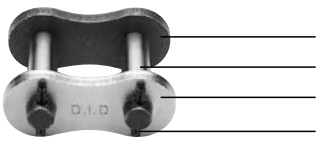

Spring pin type connecting link which the connecting pins are interference-fitted with connecting plate is called a **HJ** type connecting link and it used for **HI-PWR-S**, **HK**, **HI-PWR-SHK**, You have option to use clearance-fitted type called **MJ** type connecting link for only **HI-PWR-S**.

Offset link

An offset link is used for increasing or decreasing the length of a chain by one pitch, and the following two types are generally available.

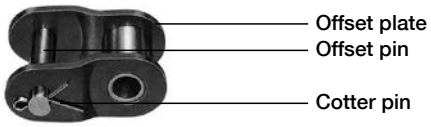

One-pitch offset link (**OJ**)



Two-pitch offset link (**2POJ**)

Since the "connecting link" and "offset link" are lower than the base chain in strength, consult us when using them for any service condition in excess of the Max. kilowatt ratings.

* Clearance fit

In this fit, a clearance is always formed between the pin and the hole when they are assembled. This method is used in standard connecting links.

* Interference fit

In this fit, an interference always occurs when the pin and the hole are assembled. This method is adopted in base chains and HJ type connecting links. However, in HJ type connecting links, the interference is smaller than that of the chain body.

XT Power Link

Reinforced Connecting Link
Standard on most DID roller chain sizes

●Connecting Link as strong as regular link.

Up to 65% greater fatigue strength than conventional loose fit type connecting link.

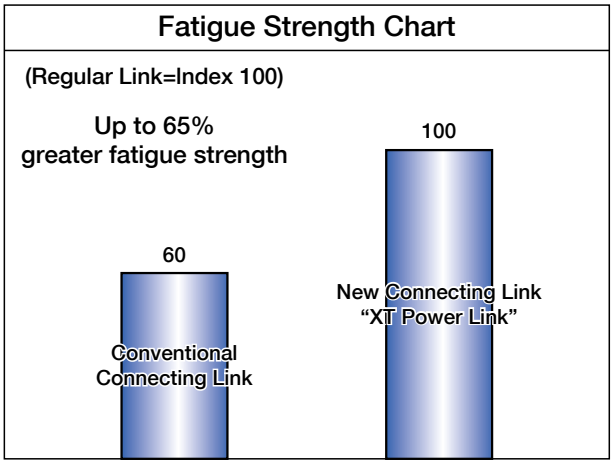

●Up to 27% higher Horsepower rating.

Example : DID 160 Max. Kilowatt Ratings (Unit : KW)

No. of Sprocket teeth	Rpm of smaller sprocket 10	25	50	100
11	2.68	6.12	11.4	21.3
12	2.95	6.72	12.5	23.4
13	3.21	7.33	13.7	25.5
14	3.48	7.94	14.8	27.6

DID160 Connecting Link without XT Power Link

No. of Sprocket teeth	Rpm of smaller sprocket 10	25	50	100
11	3.40	7.75	14.5	27.0
12	3.73	8.52	15.9	29.7
13	4.07	9.29	17.3	32.3
14	4.41	10.1	18.8	35.0

DID160 Connecting Link with XT Power Link

●No need to select a larger size chain because of the connecting link strength.

CBP Treatment
Compression
Beveling
process

The cause of failure, weakness at the breakthrough edge of the link plate hole, is eliminated by CBP.

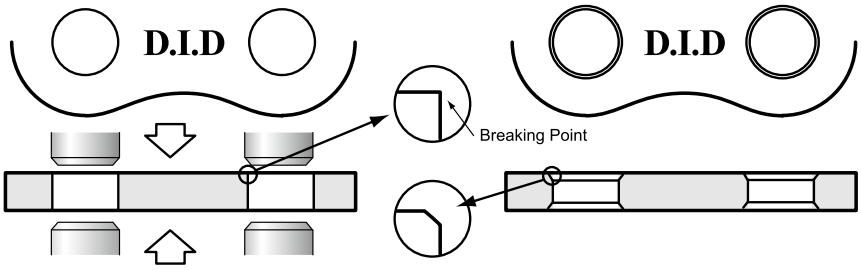

●Why it was necessary to develop the "XT Power Link" ?

Since the fatigue strength of a conventional connecting link is approximately 60%-80% the fatigue strength of a regular link, chain selection has always been based on the lower fatigue strength of the of connecting link.

XT Power Link is a connecting link with fatigue strength equal to a regular link. DID's unique CBP (Compression Beveling Process) and Ball-drifting strengthens the XT Power Link by eliminating the weakness caused during standard connecting link manufacture. As a result, a larger sized chain need on longer be selected.

●"XT Power Link" Line - Up / Chain Size & Connecting Link Type Standard on these D.I.D Roller Chain Sizes

JIS-ANSI No.	50	60	80	100	120	140	160	180	200	240
DID Chain size	DID 50	DID 60	DID 80	DID 100	DID 120	DID 140	DID 160	DID 180	DID 200	DID 240
Type	RJ,CJ		CJ							

RJ : Spring clip type connecting link CJ : Cotter type connecting link

●Flowchart of the "XT Power Link" process

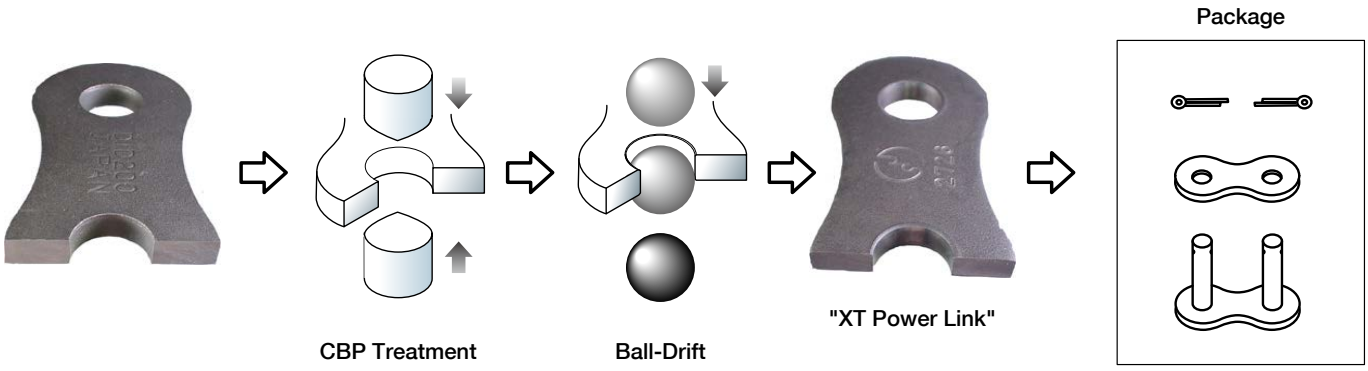



Worldwide standard chains complying with JIS and ANSI

The 14 sizes of DID standard roller chains are available ranging from DID25 to DID240 including those in conformity with ANSI (American National Standard Institute), and ISO (International Organization for Standardization).

The chains not only meet the requirements for the minimum tensile strength prescribed by ANSI and ISO, but they also provide the top class quality in the world including a high fatigue strength.



Suitable uses

- General use for driving and lifting equipment.

<Examples>

- Driving transfer units and other equipment. For multilevel parking.

Selection of chains

For selection of a chain, see the tables of "Max. Horsepower Ratings" for standard roller chains (P20 ~ P47) and "Designing of Chain Transmission" (P122 ~ P128).
However, only for a special case of low speed and less shock, "Low-speed selection" method (P123) can also be referred to.

Standard roller chains up to five strands are available.
The standard method for connecting pins and plates is rivet type (RP).
The cotter type (CP) is available for standard chains and HK chains of DID80 or larger.

Sprockets

The standard roller chains can be engaged with standard sprockets of the corresponding nominal numbers. For sprockets, refer to the table of "Dimensions" for each size of chain.

Connecting links and offset links

For connecting links and offset links, refer to the table of "Dimensions" for each size of chain.
The connecting links are generally RJ or CJ type connecting links in which the pins are clearance-fitted with the connecting plate. Since clearance-fitted links are inferior to the base chain in Max. allowable tension as in the case of one-pitch offset links (OJ), "Low-speed selection" (P123) cannot be referred to. Since the Max. kilowatt ratings are decided considering the strength of connecting links and OJ, the clearance-fitted connecting links and OJ can be used if the chains are selected according to the "General selection".
When a higher Max. allowable tension is required for the connecting link, use the interference-fitted connecting link (HJ type connecting link) of a HI-PWR-S chain, and in the case of offset links, use 2POJ. For details, refer to the table of "Dimensions" for each size of chain.

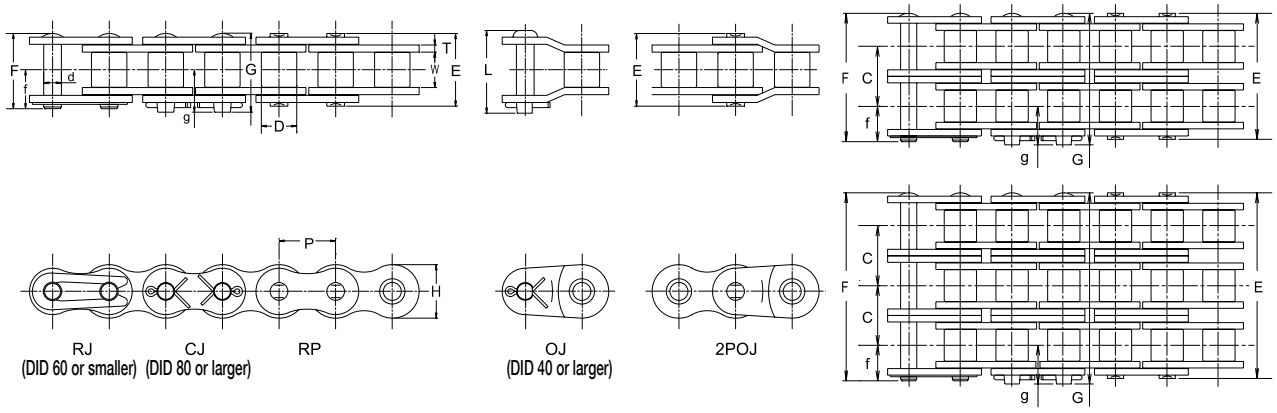

Dimensions

Unit (mm)

Chain No. DID	Chain No. JIS	Pitch P	Roller Link Width W	Bush Dia. D	Pin d	Pin E	Pin F	Pin G	Pin L	Pin f	Pin g	Transverse Pitch C	Plate T	Plate H	JIS Min. Tensile Strength kN	JIS Min. Tensile Strength kgf	DID Min. Tensile Strength kN	DID Min. Tensile Strength kgf	DID Avg. Tensile Strength kN	DID Avg. Tensile Strength kgf	DID Max. Allowable Load kN	DID Max. Allowable Load kgf	Approx. weight (kg/m)	No. of links per unit
*DID 25	25	6.35	3.18	(3.30)	2.31	7.8	8.5	—	—	4.7	—	6.4	0.72	5.9	3.5	360	3.63	370	4.41	450	0.69	70	0.13	160
*DID 35	35	9.525	4.78	(5.08)	3.59	12.0	13.1	—	—	7.3	—	10.1	1.25	9.0	7.9	800	8.83	900	11.2	1,140	2.15	220	0.32	320
DID 41	41	12.70	6.38	7.77	3.59	13.7	14.6	—	15.5	7.9	—	—	1.20	9.6	6.7	680	8.83	900	10.7	1,090	2.35	240	0.39	240
DID 40	40	12.70	7.95	7.92	3.97	16.5	17.6	18.1	19.1	9.5	10.1	14.4	1.50	12.0	13.9	1,410	15.7	1,590	19.1	1,940	3.72	380	0.63	240
DID 50	50	15.875	9.53	10.16	5.09	20.3	21.9	22.1	23.2	11.6	12.1	18.1	2.00	15.0	21.8	2,210	26.5	2,690	30.8	3,130	6.86	700	1.06	192
DID 60	60	19.05	12.70	11.91	5.96	25.4	26.9	27.9	29.8	14.3	15.1	22.8	2.40	18.1	31.3	3,180	35.3	3,580	44.1	4,480	9.31	950	1.53	160
DID 80	80	25.40	15.88	15.88	7.94	32.6	—	35.4	37.1	—	19.0	29.3	3.20	24.0	55.6	5,640	71.6	7,270	78.4	7,960	14.7	1,490	2.55	120
DID 100	100	31.75	19.05	19.05	9.54	39.5	—	42.5	45.2	—	22.7	35.8	4.00	29.9	87	8,830	108	10,960	118	11,980	22.5	2,280	3.79	96
DID 120	120	38.10	25.40	22.23	11.11	49.7	—	53.0	54.0	—	28.2	45.4	4.80	35.9	125	12,690	148	15,030	166	16,850	30.4	3,090	5.49	80
DID 140	140	44.45	25.40	25.40	12.71	53.6	—	58.4	59.6	—	31.6	48.9	5.60	41.9	170	17,260	193	19,590	215	21,830	40.2	4,080	7.11	68
DID 160	160	50.80	31.75	28.58	14.29	63.6	—	68.2	69.7	—	36.5	58.5	6.40	47.8	223	22,640	245	24,870	269	27,310	52.9	5,370	9.82	60
DID 180	180	57.15	35.72	35.71	17.46	71.5	—	77.3	79.3	—	41.6	65.8	7.10	53.8	281	28,530	333	33,810	362	36,750	61.7	6,260	12.7	54
DID 200	200	63.50	38.10	39.68	19.85	77.9	—	85.0	87.3	—	45.9	71.6	8.00	60.0	347	35,230	431	43,760	470	47,720	73.5	7,460	16.5	48
DID 240	240	76.20	47.63	47.63	23.81	95.2	—	102.9	105.4	—	55.3	87.8	9.50	71.5	500	50,760	623	63,250	686	69,640	99	10,050	23.3	40

Note: 1. Those marked with * indicate bushing chains.
2. The values of average tensile strength and Max. allowable load are for chains.

DID 25 standard roller chain

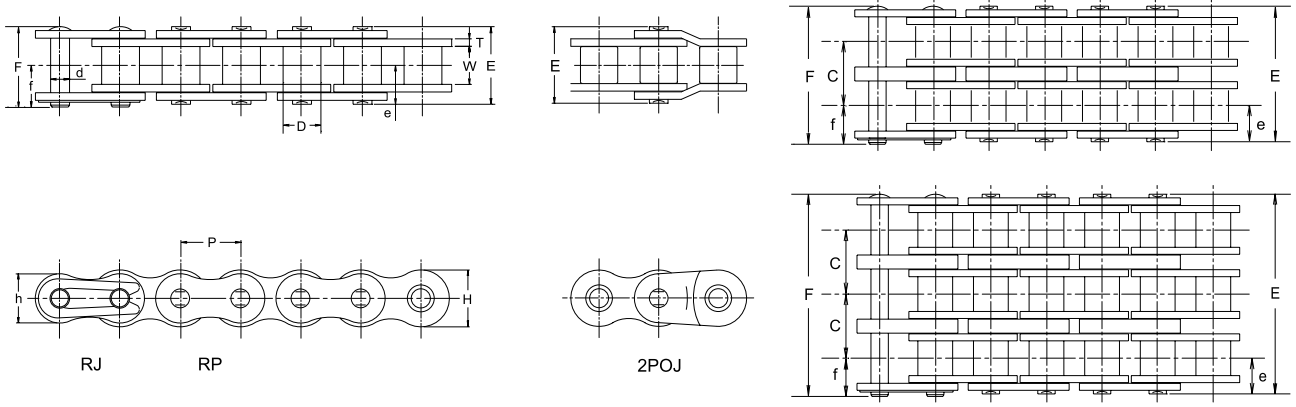

Dimensions

Unit (mm)

Chain No.		Pitch	Roller Link Width	Bush Dia.	Pin					Transverse Pitch	Plate			JIS Min. Tensile Strength		DID Min. Tensile Strength		DID Avg. Tensile Strength		DID Max. Allowable Load		Approx. Weight (kg/m)
DID	JIS	P	W	D	d	E	F	e	f	C	T	H	h	kN	kgf	kN	kgf	kN	kgf	kN	kgf	
DID25	25					7.8	8.5							3.5	360	3.63	370	4.41	450	0.69	70	0.13
DID25-2	25-2					14.4	15.0							7	710	7.26	740	8.82	900	1.17	120	0.26
DID25-3	25-3	6.35	3.18	3.30	2.31	20.8	21.4	3.9	4.7	6.4	0.72	5.9	5.2	10.5	1,070	10.9	1,110	13.2	1,340	1.73	180	0.39
DID25-4	25-4					27.2	27.8							–	–	14.5	1,470	17.6	1,790	2.28	230	0.52
DID25-5	25-5					33.7	34.3							–	–	18.2	1,850	20	2,030	2.69	270	0.65

Note: Values of average tensile strength and max. allowable load are for chain body.

Max. Kilowatt Ratings

Unit (kW)

No. of Teeth of Small Sprocket \ Type of Lubrication	Small Sprocket revolutions per minute (rpm) (See P132 for the details of type of lubrication A, B and C.)																			
	100	500	900	1200	1800	2500	3000	3500	4000	4500	5000	5500	6000	6500	7000	7500	8000	8500	9000	10000
	A					B														
11	0.04	0.18	0.31	0.40	0.58	0.77	0.91	1.05	1.03	0.86	0.74	0.64	0.56	0.50	0.44	0.40	0.36	0.33	0.30	0.26
12	0.05	0.20	0.34	0.44	0.63	0.85	1.00	1.15	1.17	0.98	0.84	0.73	0.64	0.57	0.51	0.46	0.41	0.38	0.35	0.30
13	0.05	0.22	0.37	0.48	0.69	0.93	1.09	1.25	1.32	1.11	0.95	0.82	0.72	0.64	0.57	0.51	0.47	0.43	0.39	0.33
14	0.06	0.24	0.40	0.52	0.75	1.00	1.18	1.36	1.48	1.24	1.06	0.92	0.80	0.71	0.64	0.58	0.52	0.48	0.44	0.37
15	0.06	0.25	0.43	0.56	0.80	1.08	1.27	1.46	1.64	1.37	1.17	1.02	0.89	0.79	0.71	0.64	0.58	0.53	0.49	0.41
16	0.06	0.27	0.46	0.60	0.86	1.16	1.37	1.57	1.77	1.51	1.29	1.12	0.98	0.87	0.78	0.70	0.64	0.58	0.53	0.46
17	0.07	0.29	0.49	0.64	0.92	1.24	1.46	1.67	1.89	1.66	1.41	1.23	1.08	0.95	0.85	0.77	0.70	0.64	0.59	0.50
18	0.07	0.31	0.52	0.68	0.98	1.32	1.55	1.78	2.01	1.81	1.54	1.34	1.17	1.04	0.93	0.84	0.76	0.70	0.64	0.54
19	0.08	0.33	0.56	0.72	1.04	1.40	1.64	1.89	2.13	1.96	1.67	1.45	1.27	1.13	1.01	0.91	0.83	0.75	0.69	0.59
20	0.08	0.35	0.59	0.76	1.10	1.47	1.74	2.00	2.25	2.11	1.81	1.56	1.37	1.22	1.09	0.98	0.89	0.81	0.75	0.64
21	0.09	0.37	0.62	0.80	1.16	1.55	1.83	2.10	2.37	2.27	1.94	1.68	1.48	1.31	1.17	1.06	0.96	0.88	0.80	0.69
22	0.09	0.38	0.65	0.84	1.22	1.63	1.93	2.21	2.50	2.44	2.08	1.81	1.58	1.40	1.26	1.13	1.03	0.94	0.86	0.74
23	0.09	0.40	0.68	0.89	1.28	1.71	2.02	2.32	2.62	2.61	2.23	1.93	1.69	1.50	1.34	1.21	1.10	1.00	0.92	0.79
24	0.10	0.42	0.72	0.93	1.34	1.80	2.12	2.43	2.74	2.78	2.37	2.06	1.81	1.60	1.43	1.29	1.17	1.07	0.98	0.84
25	0.10	0.44	0.75	0.97	1.40	1.88	2.21	2.54	2.86	2.95	2.52	2.19	1.92	1.70	1.52	1.37	1.25	1.14	1.04	0.89
28	0.12	0.50	0.85	1.10	1.58	2.12	2.50	2.87	3.24	3.50	2.99	2.59	2.27	2.02	1.81	1.63	1.48	1.35	1.24	1.06
30	0.13	0.54	0.91	1.18	1.70	2.28	2.69	3.09	3.49	3.88	3.32	2.87	2.52	2.24	2.00	1.81	1.64	1.50	1.37	1.17
32	0.14	0.58	0.98	1.27	1.82	2.45	2.89	3.32	3.74	4.16	3.65	3.17	2.78	2.46	2.21	1.99	1.81	1.65	1.51	1.29
35	0.15	0.63	1.08	1.39	2.01	2.70	3.18	3.65	4.12	4.58	4.18	3.62	3.18	2.82	2.52	2.27	2.06	1.89	1.73	1.48
40	0.17	0.73	1.24	1.61	2.32	3.12	3.67	4.22	4.76	5.29	5.11	4.43	3.88	3.44	3.08	2.78	2.52	2.30	2.11	1.81
45	0.20	0.83	1.41	1.83	2.63	3.54	4.17	4.79	5.40	6.01	6.09	5.28	4.63	4.11	3.68	3.32	3.01	2.75	2.52	2.15

C

Note: Values in the table above are for single strand chains only. For multiplex chains, please apply the coefficient of multi-strand. (See "Chain Selection" on P122).

DID 25 Standard Sprocket

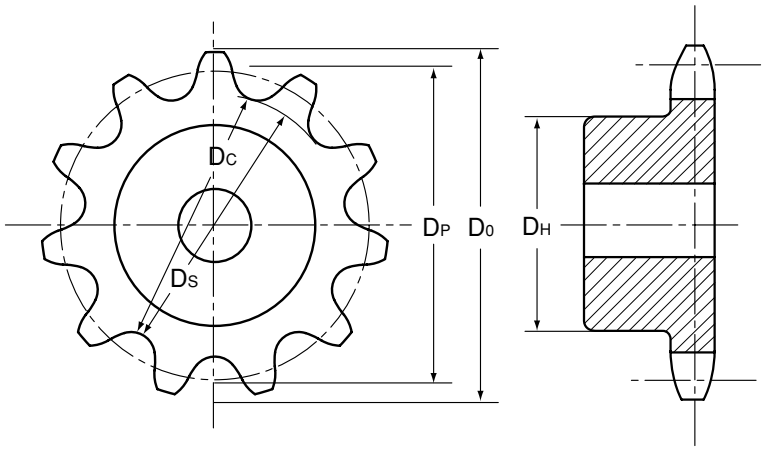

DID 25 sprocket is made to order.

Unit (mm)

Number of Teeth N	Pitch Dia Dp	Tip Dia Do	Root Dia Ds	Caliper Dia Dc	Max. Hub Dia Dh
11	22.54	26	19.24	19.01	15
12	24.53	28	21.23	21.23	17
13	26.53	30	23.23	23.04	19
14	28.54	32	25.24	25.24	21
15	30.54	34	27.24	27.07	23
16	32.55	36	29.25	29.25	25
17	34.56	38	31.26	31.11	27
18	36.57	40	33.27	33.27	29
19	38.58	42	35.28	35.15	31
20	40.59	44	37.29	37.29	33
21	42.61	46	39.31	39.19	35
22	44.62	48	41.32	41.32	37
23	46.63	50	43.33	43.23	39
24	48.65	52	45.35	45.35	41
25	50.66	54	47.36	47.26	43
26	52.68	56	49.38	49.38	45
27	54.70	58	51.40	51.31	47
28	56.71	60	53.41	53.41	49
29	58.73	62	55.43	55.35	51
30	60.75	64	57.45	57.45	53
31	62.77	66	59.47	59.39	55
32	64.78	68	61.48	61.48	57
33	66.80	70	63.50	63.43	59
34	68.82	72	65.52	65.52	61
35	70.84	74	67.54	67.47	63
36	72.86	76	69.56	69.56	65
37	74.88	78	71.58	71.51	67
38	76.90	80	73.60	73.60	70
39	78.91	82	75.61	75.55	72
40	80.93	84	77.63	77.63	74
41	82.95	86	79.65	79.59	76
42	84.97	89	81.67	81.67	78
43	86.99	91	83.69	83.63	80
44	89.01	93	85.71	85.71	82
45	91.03	95	87.73	87.68	84
48	97.09	101	93.79	93.79	90
50	101.13	105	97.83	97.83	94
54	109.21	113	105.91	105.91	102
55	111.23	115	107.93	107.88	104
60	121.33	125	118.03	118.03	114
65	131.43	135	128.13	128.10	124
70	141.54	145	138.24	138.24	134
75	151.64	155	148.34	148.31	144

DID 35 standard roller chain

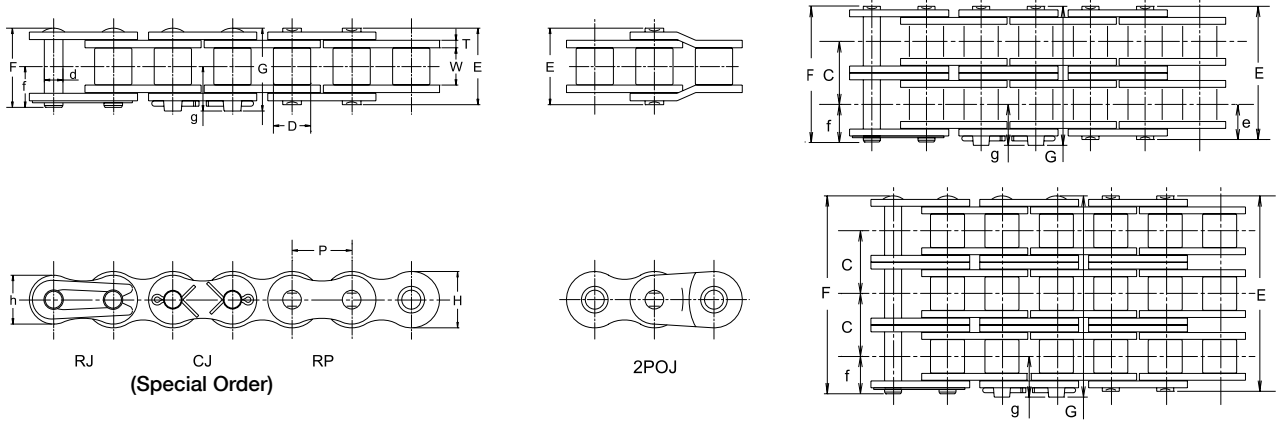

Dimensions

Unit (mm)

Chain No.		Pitch	Roller Link Width	Bush Dia.	Pin							Transverse Pitch	Plate			JIS Min. Tensile Strength		DID Min. Tensile Strength		DID Avg. Tensile Strength		DID Max. Allowable Load		Approx. Weight
DID	JIS	P	W	D	d	E	F	G	e	f	g	C	T	H	h	kN	kgf	kN	kgf	kN	kgf	kN	kgf	(kg/m)
DID35	35					12.0	13.1	14.1								7.9	800	8.83	900	11.2	1,140	2.15	220	0.32
DID35-2	35-2					22.1	23.2	23.5								15.8	1,600	17.7	1,800	22.4	2,270	3.66	370	0.69
DID35-3	35-3	9.525	4.78	5.08	3.59	32.2	33.4	33.7	6.0	7.3	7.4	10.1	1.25	9.0	7.75	23.7	2,410	26.5	2,690	33.6	3,410	5.38	550	1.05
DID35-4	35-4					42.3	43.5	43.8								—	—	35.3	3,580	44.8	4,550	7.1	720	1.41
DID35-5	35-5					52.5	53.7	54.0								—	—	44.2	4,490	56	5,690	8.39	850	1.77

Note: The values of average tensile strength and Max. allowable tension are for chains.

Max. Kilowatt Ratings DID 35

Unit (kW)

No. of Teeth of Small Sprocket \ Type of Lubrication	Small Sprocket revolutions per minute (rpm) (See P132 for the details of type of lubrication A, B and C.)																				
	100	500	900	1200	1500	1800	2500	3000	3500	4000	4500	5000	5500	6000	6500	7000	7500	8000	8500	9000	10000
	A			B														C			
11	0.21	0.92	1.56	2.02	2.47	2.91	2.88	2.19	1.73	1.42	1.19	1.01	0.88	0.77	0.68	0.61	0.55	0.50	0.45	0.42	0.36
12	0.23	1.01	1.71	2.22	2.71	3.20	3.28	2.49	1.98	1.62	1.35	1.16	1.00	0.88	0.78	0.70	0.63	0.57	0.52	0.48	0.41
13	0.25	1.10	1.87	2.42	2.96	3.49	3.70	2.81	2.23	1.82	1.53	1.30	1.13	0.99	0.88	0.78	0.71	0.64	0.59	0.54	0.46
14	0.28	1.19	2.02	2.62	3.21	3.78	4.13	3.14	2.49	2.04	1.71	1.46	1.26	1.11	0.98	0.88	0.79	0.72	0.65	0.60	0.51
15	0.30	1.28	2.18	2.83	3.46	4.07	4.58	3.48	2.76	2.26	1.89	1.62	1.40	1.23	1.09	0.97	0.88	0.80	0.73	0.67	0.57
16	0.32	1.38	2.34	3.03	3.71	4.37	5.05	3.84	3.05	2.49	2.09	1.78	1.54	1.35	1.20	1.07	0.97	0.88	0.80	0.73	0.63
17	0.34	1.47	2.50	3.24	3.96	4.66	5.53	4.20	3.34	2.73	2.29	1.95	1.69	1.48	1.32	1.18	1.06	0.96	0.88	0.81	0.69
18	0.36	1.56	2.66	3.44	4.21	4.96	6.02	4.58	3.63	2.97	2.49	2.13	1.84	1.62	1.43	1.28	1.16	1.05	0.96	0.88	0.75
19	0.39	1.66	2.82	3.65	4.46	5.26	6.53	4.97	3.94	3.23	2.70	2.31	2.00	1.75	1.55	1.39	1.25	1.14	1.04	0.95	0.81
20	0.41	1.75	2.98	3.86	4.72	5.56	7.06	5.37	4.26	3.48	2.92	2.49	2.16	1.89	1.68	1.50	1.35	1.23	1.12	1.03	0.88
21	0.43	1.85	3.14	4.07	4.97	5.86	7.59	5.78	4.58	3.75	3.14	2.68	2.32	2.04	1.81	1.62	1.46	1.32	1.21	1.11	0.94
22	0.45	1.94	3.30	4.28	5.23	6.16	8.14	6.19	4.91	4.02	3.37	2.88	2.49	2.19	1.94	1.73	1.56	1.42	1.29	1.19	1.01
23	0.47	2.04	3.46	4.49	5.49	6.47	8.69	6.62	5.25	4.30	3.60	3.07	2.66	2.34	2.07	1.85	1.67	1.52	1.38	1.27	1.08
24	0.50	2.13	3.63	4.70	5.74	6.77	9.10	7.06	5.60	4.58	3.84	3.28	2.84	2.49	2.21	1.98	1.78	1.62	1.48	1.35	1.16
25	0.52	2.23	3.79	4.91	6.00	7.07	9.51	7.50	5.95	4.87	4.08	3.48	3.02	2.65	2.35	2.10	1.89	1.72	1.57	1.44	1.23
28	0.59	2.52	4.28	5.55	6.79	8.00	10.8	8.89	7.06	5.78	4.84	4.13	3.58	3.14	2.79	2.49	2.25	2.04	1.86	1.71	1.46
30	0.63	2.72	4.61	5.98	7.31	8.62	11.6	9.86	7.83	6.41	5.37	4.58	3.97	3.48	3.09	2.76	2.49	2.26	2.06	1.89	1.62
32	0.68	2.91	4.95	6.41	7.84	9.24	12.4	10.9	8.62	7.06	5.91	5.05	4.37	3.84	3.40	3.05	2.75	2.49	2.27	2.09	—
35	0.75	3.21	5.45	7.06	8.64	10.2	13.7	12.4	9.86	8.07	6.76	5.78	5.01	4.39	3.89	3.48	3.14	2.85	2.60	2.39	—
40	0.87	3.71	6.30	8.16	9.98	11.8	15.8	15.2	12.1	9.86	8.27	7.06	6.12	5.37	4.76	4.26	3.84	3.48	—	—	—
45	0.99	4.21	7.15	9.27	11.3	13.4	18.0	18.1	14.4	11.8	9.86	8.42	7.30	6.41	5.68	5.08	4.58	—	—	—	—

Note: Values in the above table are for simplex chain only. For multiplex chains, please multiply the coefficient of multi-strand. (See "Chain Selection" on P.122).

DID 35 Standard Sprocket

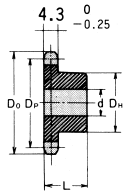

Single sprocket with hub on one side (Single B type)

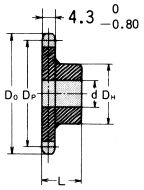

Single sprocket with hub on one side (Single BW type welded)

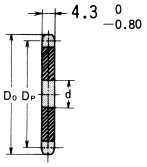

Flat Plain (A type)

Unit (mm)

Number of teeth	Pitch dia. Dp	Tip dia. Do	Single sprocket with hub on one side (B type/ BW type)						Flat plain (A type)			Number of teeth
			Bore d		Hub		Approx. weight (Kg)	Material	Stock d	Approx. weight (Kg)	Material	
			Stock	Max.	(Dia.) DH	(Length) L						
9	27.85	32	8	11	22 ※	20	0.06		8			9
10	30.82	34	8	12	25 ※	20	0.08		8	0.02		10
11	33.81	38	8	14	27 ※	20	0.09		9.5	0.03		11
12	36.80	40	8	17	31 ※	20	0.12		9.5	0.03		12
13	39.80	44	9	17	32 ※	20	0.12		9.5	0.04		13
14	42.80	47	9	17	30	20	0.12		9.5	0.04		14
15	45.81	50	9	20	35	20	0.16		9.5	0.05		15
16	48.82	53	9	22	37	20	0.19		9.5	0.05		16
17	51.84	56	11	25	41	20	0.22		12	0.07		17
18	54.85	59	11	25	44	20	0.25		12	0.07		18
19	57.87	62	11	28.5	47	20	0.28		12	0.09		19
20	60.89	65	11	30	50	20	0.32		12	0.09		20
21	63.91	68	11	32	53	20	0.36		12	0.11		21
22	66.93	71	11	32	53	20	0.37		12	0.11		22
23	69.95	75	11	32	53	20	0.38		12	0.11		23
24	72.97	78	11	32	53	22	0.43	Carbon Steel	12	0.14		24
25	76.00	81	11	32	53	22	0.44		12	0.16		25
26	79.02	84	11	32	53	22	0.45		12	0.16		26
27	82.05	87	11	32	53	22	0.46		12	0.17		27
28	85.07	90	11	32	53	22	0.48		12	0.18		28
29	88.10	93	11	32	53	22	0.49		12	0.20		29
30	91.12	96	11	32	53	22	0.51		12	0.23		30
31	94.15	99	11	32	53	22	0.52		12	0.24	Rolled Steel	31
32	97.18	102	11	32	53	22	0.54		12	0.27		32
33	100.20	105	11	32	53	22	0.55		12	0.28		33
34	103.23	108	11	32	53	22	0.57		12	0.29		34
35	106.26	111	11	32	53	22	0.59		12	0.30		35
36	109.29	114	11	32	53	22	0.61		13	0.32		36
37	112.32	117	11	42	63	22	0.82		13	0.37		37
38	115.34	120	11	42	63	25	0.82		13	0.41		38
39	118.37	123	11	42	63	25	0.83		13	0.42		39
40	121.40	126	11	42	63	25	0.85		13	0.43		40
41	124.43	129	12	42	63	25	0.85					41
42	127.46	132	12	42	63	25	0.86		13	0.47		42
43	130.49	135	12	42	63	25	0.87					43
44	133.52	138	12	42	63	25	0.90					44
45	136.55	142	12	42	63	25	0.95		13	0.50		45
48	145.64	151	12	42	63	25	1.00	Rolled Steel Welded	13	0.55		48
50	151.69	157	12	42	63	25	1.05		13	0.59		50
54	163.82	169	12	42	63	25	1.20		13	0.68		54
55	166.85	172	12	42	63	25	1.22					55
60	182.00	187	12	42	63	25	1.30		13	0.87		60
65	197.15	202	12	45	68	25	1.50					65
70	212.30	218	12	45	68	25	1.70					70
75	227.46	233	12	45	68	25	1.80					75

Note: 1. Determine the required bore size less than the Max. value shown above taking strength reduction into consideration.
2. The shaded area of the above table indicates heat treated teeth.
3. Those marked * have slot on hub.

DID 41 standard roller chain

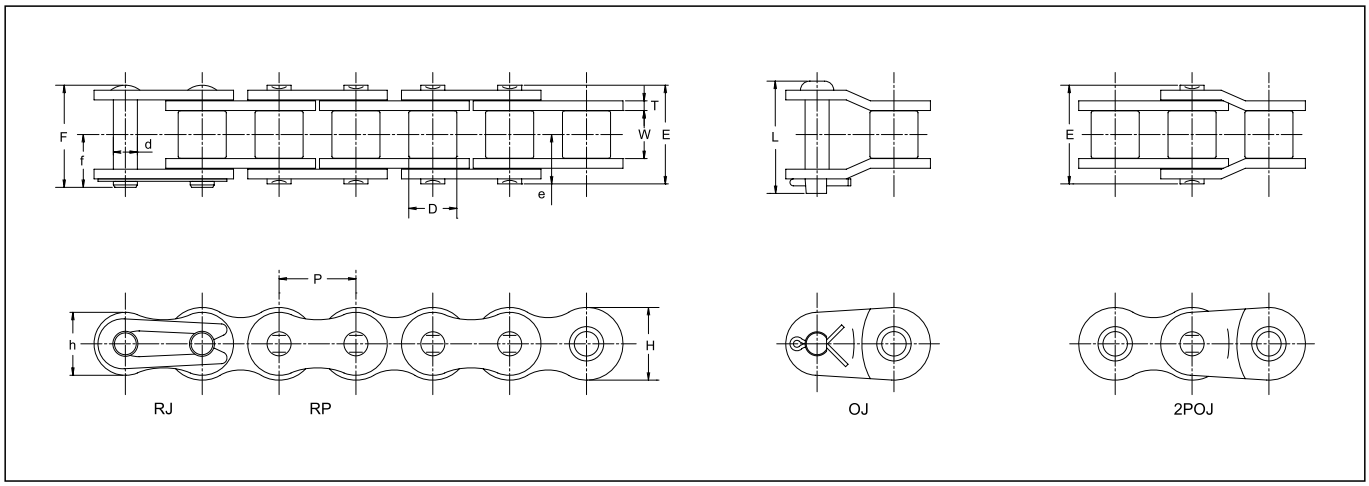

Dimensions

Unit (mm)

Chain No.		Pitch	Roller Link Width	Roller dia.	Pin						Plate			JIS Min. Tensile Strength		DID Min. Tensile Strength		DID Avg. Tensile Strength		DID Max. Allowable Load		Approx. Weight (kg/m)
DID	JIS	P	W	D	d	E	F	L	e	f	T	H	h	kN	kgf	kN	kgf	kN	kgf	kN	kgf	
DID 41	41	12.70	6.38	7.77	3.59	13.7	14.6	15.5	6.9	7.9	1.20	9.6	8.0	6.7	680	8.83	900	10.7	1,090	2.35	240	0.39

Note: The values of average tensile strength and Max. allowable tension are for chains.

Max. Kilowatt Ratings DID 41

Unit (kW)

No. of Teeth of Small Sprocket \ Type of Lubrication	Small sprocket rpm (Refer to P132 for the details of lubrication A, B and C.)																		
	50	200	400	600	900	1200	1800	2400	3000	3500	4000	4500	5000	5500	6000	6500	7000	7500	8000
	A			B									C						
11	0.11	0.40	0.74	1.06	1.53	1.28	0.69	0.45	0.32	0.26	0.21	0.18	0.15	0.13	0.11	0.10	0.09	0.08	0.07
12	0.12	0.43	0.81	1.17	1.68	1.45	0.79	0.51	0.37	0.29	0.24	0.20	0.17	0.15	0.13	0.12	0.10	0.09	0.08
13	0.14	0.47	0.88	1.27	1.84	1.64	0.89	0.58	0.41	0.33	0.27	0.23	0.19	0.17	0.15	0.13	0.12	0.10	0.10
14	0.15	0.51	0.96	1.38	1.99	1.83	1.00	0.65	0.46	0.37	0.30	0.25	0.22	0.19	0.16	0.15	0.13	0.12	0.11
15	0.16	0.55	1.03	1.49	2.14	2.03	1.11	0.72	0.51	0.41	0.33	0.28	0.24	0.21	0.18	0.16	0.14	0.13	—
16	0.17	0.59	1.11	1.59	2.30	2.24	1.22	0.79	0.57	0.45	0.37	0.31	0.26	0.23	0.20	0.18	0.16	0.14	—
17	0.18	0.63	1.18	1.70	2.45	2.45	1.33	0.87	0.62	0.49	0.40	0.34	0.29	0.25	0.22	0.19	0.17	0.16	—
18	0.19	0.67	1.26	1.81	2.61	2.67	1.45	0.94	0.68	0.54	0.44	0.37	0.31	0.27	0.24	0.21	0.19	0.17	—
19	0.21	0.71	1.33	1.92	2.77	2.90	1.58	1.02	0.73	0.58	0.48	0.40	0.34	0.30	0.26	0.23	0.21	0.19	—
20	0.22	0.76	1.41	2.03	2.92	3.13	1.70	1.11	0.79	0.63	0.51	0.43	0.37	0.32	0.28	0.25	0.22	0.20	—
21	0.23	0.80	1.49	2.14	3.08	3.36	1.83	1.19	0.85	0.68	0.55	0.46	0.40	0.34	0.30	0.27	0.24	0.22	—
22	0.24	0.84	1.56	2.25	3.24	3.61	1.96	1.28	0.91	0.72	0.59	0.50	0.42	0.37	0.32	0.29	0.26	—	—
23	0.25	0.88	1.64	2.36	3.40	3.86	2.10	1.36	0.98	0.77	0.63	0.53	0.45	0.39	0.34	0.31	0.27	—	—
24	0.26	0.92	1.72	2.47	3.56	4.11	2.24	1.45	1.04	0.83	0.68	0.57	0.48	0.42	0.37	0.33	0.29	—	—
25	0.28	0.96	1.79	2.58	3.72	4.37	2.38	1.54	1.11	0.88	0.72	0.60	0.51	0.45	0.39	0.35	—	—	—
28	0.31	1.09	2.03	2.92	4.20	5.18	2.82	1.83	1.31	1.04	0.85	0.71	0.61	0.53	0.46	0.41	—	—	—
30	0.34	1.17	2.18	3.14	4.53	5.74	3.13	2.03	1.45	1.15	0.94	0.79	0.68	0.59	0.51	—	—	—	—
32	0.36	1.25	2.34	3.37	4.86	6.29	3.44	2.24	1.60	1.27	1.04	0.87	0.74	0.64	0.57	—	—	—	—
35	0.40	1.38	2.58	3.71	5.35	6.93	3.94	2.56	1.83	1.45	1.19	1.00	0.85	0.74	—	—	—	—	—
40	0.46	1.60	2.98	4.29	6.18	8.01	4.81	3.13	2.24	1.78	1.45	1.22	1.04	—	—	—	—	—	—
45	0.52	1.81	3.38	4.87	7.02	9.09	5.74	3.73	2.67	2.12	1.73	1.45	—	—	—	—	—	—	—

DID 41 Standard Sprocket

DID 41 is for single only.

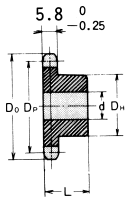

Single sprocket with hub on one side (Single B type)

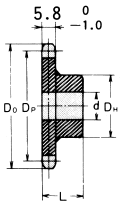

Single sprocket with hub on one side (Single BW type Welded)

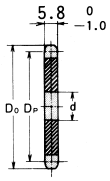

Flat plain (A type)

Unit (mm)

Number of teeth	Pitch dia. DP	Tip dia. DO	Single sprocket with hub on one side (B type/ BW type)						Flat plain (A type)			Number of teeth
			Bore d		Hub		Approx. weight (Kg)	Material	Stock d	Approx. weight (Kg)	Material	
			Stock	Max.	(Dia.) DH	(Length) L						
9	37.13	42	9	15	28 ※	22	0.11	Carbon Steel	9		Rolled Steel	9
10	41.10	46	9	16	32 ※	22	0.14		9	0.05		10
11	45.08	51	10	20	37 ※	22	0.19		10	0.06		11
12	49.07	53	10	22	40 ※	22	0.22		10	0.10		12
13	53.07	58	13	20	37	22	0.23		13	0.10		13
14	57.07	63	13	24	42	22	0.28		13	0.11		14
15	61.08	67	13	28	46	22	0.34		13	0.15		15
16	65.10	71	13	30	50	22	0.40		13	0.17		16
17	69.12	75	13	32	54	22	0.46		13	0.20		17
18	73.14	78	13	35	57	22	0.51		13	0.20		18
19	77.16	83	13	39	62	22	0.59		13	0.26		19
20	81.18	88	14	45	67	25	0.76		14	0.26		20
21	85.21	92	14	45	71	25	0.85		14	0.30		21
22	89.24	96	14	50	75	25	0.95		14	0.30		22
23	93.27	98	14	50	77	25	1.00		14	0.35		23
24	97.30	104	14	42	63	25	0.81		14	0.37		24
25	101.33	108	14	42	63	25	0.88		14	0.40		25
26	105.36	112	14	42	63	25	0.92		14	0.35		26
27	109.40	116	14	42	63	25	0.96		14	0.50		27
28	113.43	120	14	42	63	25	1.00		14	0.51		28
29	117.46	124	14	42	63	25	1.10		14	0.51		29
30	121.50	128	14	42	63	25	1.10		14	0.60		30
31	125.53	132	14	45	63	25	1.20		14	0.61		31
32	129.57	137	14	45	68	28	1.30		14	0.68		32
33	133.61	140	14	45	68	28	1.30		14	0.70		33
34	137.64	145	14	45	68	28	1.30		14	0.75		34
35	141.68	149	14	45	68	28	1.40		14	0.83		35
36	145.72	153	17	45	67	28	1.40	Rolled Steel Welded	17	0.90		36
37	149.75	157	17	45	67	28	1.50		17	0.93		37
38	153.79	161	17	45	67	28	1.50		17	0.95		38
39	157.83	165	17	45	67	28	1.60		17	1.05		39
40	161.87	169	17	45	67	28	1.60		17	1.06		40
41	165.91	173	17	45	72	32	1.70		17	1.15		41
42	169.95	177	17	48	72	32	2.00		17	1.20		42
43	173.98	181	17	48	72	32	2.10		17	1.23		43
44	178.02	185	17	48	72	32	2.20		17	1.30		44
45	182.06	189	17	48	72	32	2.20		17	1.36		45
48	194.18	201	17	48	72	32	2.30		17	1.53		48
50	202.26	209	17	48	72	32	2.40		17	1.70		50
54	218.42	226	17	48	72	32	2.80		17	2.00		54
60	242.66	250	17	48	72	32	3.20		17	2.50		60
65	262.87	270	17	55	82	32	3.90		17	2.87		65
70	283.07	290	19	55	82	32	4.30		19	3.30		70
72	291.16	299	19	55	82	32	4.80		19	3.40		72
75	303.28	311	19	55	82	32	5.00		19	4.50		75

Note: 1. Determine the required bore size less than the Max. value shown above taking strength reduction into consideration.
2. Shaded area of the above dimension table indicates heat treated teeth.
3. Those marked * have slot on hub.

DID 40 standard roller chain

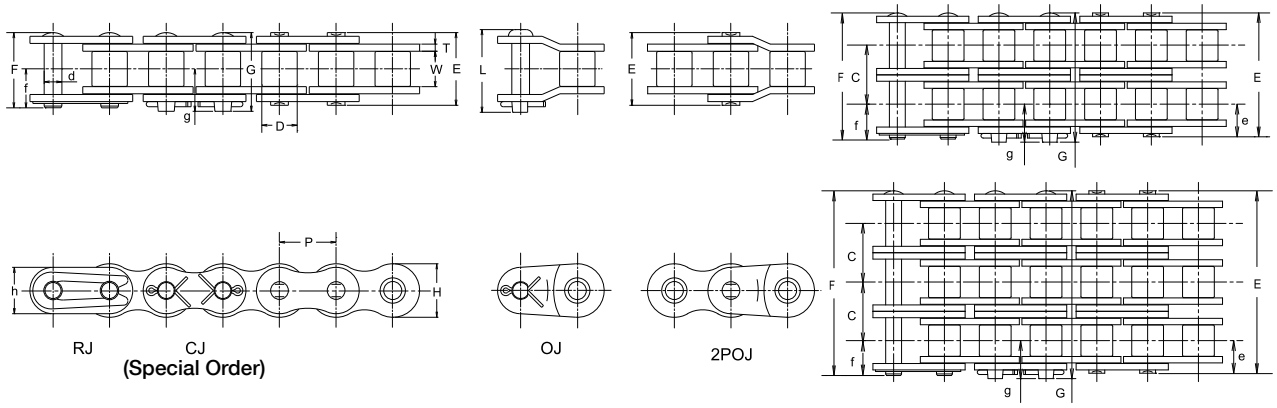

Dimensions

Unit (mm)

Chain No.		Pitch	Roller Link Width	Roller dia.	Pin								Transverse Pitch	Plate			JIS Min. Tensile Strength		DID Min. Tensile Strength		DID Avg. Tensile Strength		DID Max. Allowable Load		Approx. Weight (kg/m)
DID	JIS	P	W	D	d	E	F	G	L	e	f	g	C	T	H	h	kN	kgf	kN	kgf	kN	kgf	kN	kgf	
DID40	40					16.5	17.6	18.1	19.1								13.9	1,410	15.7	1,590	19.1	1,940	3.72	380	0.63
DID40-2	40-2					31.0	32.1	32.6	33.6								27.8	2,820	31.4	3,190	38.2	3,880	6.32	640	1.19
DID40-3	40-3	12.70	7.95	7.92	3.97	45.4	46.4	47.0	47.9	8.3	9.5	10.1	14.4	1.50	12.0	10.4	41.7	4,230	47.1	4,780	57.3	5,820	9.3	940	1.78
DID40-4	40-4					59.9	61.0	61.4	61.4								—	—	62.8	6,380	76.4	7,760	12.3	1,250	2.37
DID40-5	40-5					74.3	75.4	75.8	75.8								—	—	78.5	7,970	95.5	9,700	14.5	1,470	2.96

Note: The values of average tensile strength and Max. allowable tension are for chains.

Max. Kilowatt Ratings DID 40

Unit (kW)

No. of Teeth of Small Sprocket \ Type of Lubrication	Small sprocket rpm (Refer to P132 for the details of lubrication A, B and C.)																			
	50	200	400	600	900	1200	1500	1800	2400	3000	3500	4000	4500	5000	5500	6000	6500	7000	7500	8000
	A			B										C						
11	0.34	1.21	2.25	3.25	4.68	5.07	4.57	3.47	2.25	1.61	1.28	1.05	0.88	0.75	0.65	0.57	0.50	0.45	0.40	0.37
12	0.38	1.33	2.48	3.57	5.15	5.67	5.21	3.96	2.57	1.84	1.46	1.19	1.00	0.85	0.74	0.65	0.57	0.51	0.46	0.42
13	0.41	1.45	2.70	3.89	5.61	6.18	5.87	4.46	2.90	2.07	1.64	1.34	1.13	0.96	0.83	0.73	0.65	0.58	0.52	0.47
14	0.45	1.57	2.93	4.22	6.08	6.70	6.56	4.99	3.24	2.32	1.84	1.50	1.26	1.07	0.93	0.82	0.72	0.65	0.58	0.53
15	0.48	1.69	3.15	4.55	6.55	7.21	7.21	5.54	3.59	2.57	2.04	1.67	1.40	1.19	1.03	0.91	0.80	0.72	0.65	—
16	0.52	1.81	3.38	4.87	7.02	7.74	7.74	6.10	3.96	2.83	2.25	1.84	1.54	1.31	1.14	1.00	0.88	0.79	0.71	—
17	0.55	1.93	3.61	5.20	7.50	8.26	8.26	6.68	4.34	3.10	2.46	2.01	1.69	1.44	1.25	1.09	0.97	0.87	0.78	—
18	0.59	2.06	3.84	5.54	7.98	8.79	8.79	7.28	4.73	3.38	2.68	2.19	1.84	1.57	1.36	1.19	1.06	0.94	0.85	—
19	0.62	2.18	4.07	5.87	8.46	9.43	9.43	7.89	5.12	3.67	2.91	2.38	1.99	1.70	1.47	1.29	1.15	1.02	0.92	—
20	0.66	2.30	4.31	6.20	8.94	10.2	10.2	8.52	5.54	3.96	3.14	2.57	2.15	1.84	1.59	1.40	1.24	1.11	1.00	—
21	0.69	2.43	4.54	6.54	9.42	11.0	11.0	9.17	5.96	4.26	3.38	2.77	2.32	1.98	1.71	1.50	1.33	1.19	—	—
22	0.73	2.56	4.77	6.88	9.91	11.7	11.7	9.84	6.39	4.57	3.62	2.97	2.48	2.12	1.84	1.61	1.43	1.28	—	—
23	0.77	2.68	5.01	7.22	10.4	12.6	12.6	10.5	6.83	4.88	3.87	3.17	2.66	2.27	1.96	1.72	1.53	1.37	—	—
24	0.80	2.81	5.24	7.55	10.9	13.4	13.4	11.2	7.28	5.21	4.13	3.38	2.83	2.42	2.09	1.84	1.63	1.46	—	—
25	0.84	2.93	5.48	7.90	11.4	14.1	14.1	11.9	7.74	5.54	4.39	3.59	3.01	2.57	2.23	1.95	1.73	—	—	—
28	0.95	3.32	6.19	8.92	12.9	16.0	16.0	14.1	9.17	6.56	5.21	4.26	3.57	3.05	2.64	2.32	2.05	—	—	—
30	1.02	3.57	6.67	9.61	13.9	17.2	17.2	15.7	10.2	7.28	5.77	4.73	3.96	3.38	2.93	2.57	—	—	—	—
32	1.10	3.83	7.16	10.3	14.9	18.4	18.4	17.3	11.2	8.02	6.36	5.21	4.36	3.72	3.23	2.83	—	—	—	—
35	1.21	4.22	7.88	11.4	16.4	20.7	20.7	19.7	12.8	9.17	7.28	5.96	4.99	4.26	3.69	—	—	—	—	—
40	1.40	4.88	9.11	13.1	18.9	24.1	24.1	24.1	15.7	11.2	8.89	7.28	6.10	5.21	—	—	—	—	—	—
45	1.59	5.54	10.3	14.9	21.5	27.4	27.4	27.4	18.7	13.4	10.6	8.69	7.28	—	—	—	—	—	—	—

Note: Values in the above table are for simplex chain only. For multiplex chains, please multiply the coefficient of multi-strand. (See "Chain Selection" on P122).

DID 40 Standard Sprocket

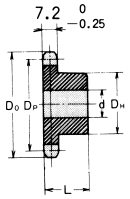

Single sprocket with hub on one side (Single B type)

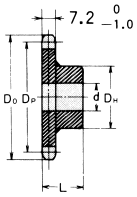

Single sprocket with hub on one side (Single BW type Welded)

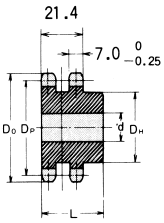

Double sprocket with hub on one side (Double B type)

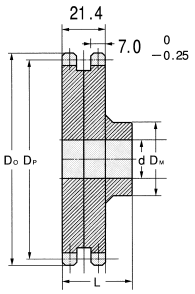

Double sprocket with hub on one Side (Double BW type Welded)

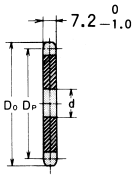

Flat plain (A type)

Unit (mm)

Number of teeth	Pitch dia.	Tip dia.	Single sprocket with hub on one side (B type/ BW type)						Double sprocket with hub on one side (B type/ BW type)						Flat plain (A type)			Number of teeth
			Bore d		Hub		Approx. weight (Kg)	Material	Bore d		Hub		Approx. weight (Kg)	Material	Stock	Approx. weight (Kg)	Material	
	DP	DO	Stock	Max.	(Dia.) DH	(Length) L			Stock	Max.	(Dia.) DH	(Length) L			d			
9	37.13	42	9	15	28 ※	22	0.11	Carbon Steel							9		Rolled Steel	9
10	41.10	46	9	18	32 ※	22	0.14								9	0.05		10
11	45.08	50	10	20	36 ※	22	0.19								10	0.06		11
12	49.07	55	10	22	40 ※	22	0.22		14	18	35	35	0.34		10	0.10		12
13	53.07	59	13	22	37	22	0.23		14	20	37	35	0.39		13	0.10		13
14	57.07	63	13	25	42	22	0.28		14	24	42	35	0.47		13	0.11		14
15	61.08	67	13	30	46	22	0.34		14	28	46	35	0.56		13	0.15		15
16	65.10	71	13	32	50	22	0.40		14	30	50	35	0.65		13	0.17		16
17	69.12	75	13	35	54	22	0.46		14	32	54	35	0.75		13	0.20		17
18	73.14	79	13	35	57	22	0.51		14	35	57	35	0.85		13	0.20		18
19	77.16	83	13	40	62	22	0.59		14	39	62	35	0.98		13	0.20		19
20	81.18	87	14	45	67	25	0.76		14	45	67	40	1.30		14	0.26		20
21	85.21	91	14	45	71	25	0.85		14	47	71	40	1.40		14	0.30		21
22	89.24	95	14	50	75	25	0.95		14	50	75	40	1.60		14	0.30		22
23	93.27	99	14	50	77	25	1.00		14	50	77	40	1.70		14	0.35		23
24	97.30	103	14	42	63	25	0.81		14	55	83	40	1.90	Carbon Steel	14	0.37		24
25	101.33	108	14	42	63	25	0.88		18	59	87	40	2.10		14	0.40		25
26	105.36	112	14	42	63	25	0.92		18	62	91	40	2.30		14	0.45		26
27	109.40	116	14	42	63	25	0.96								14	0.50		27
28	113.43	120	14	42	63	25	1.00								14	0.51		28
29	117.46	124	14	42	63	25	1.10								14	0.51		29
30	121.50	128	14	42	63	25	1.10		18	73	106	40	3.00		14	0.60		30
31	125.53	132	14	45	63	25	1.20								14	0.61		31
32	129.57	136	14	45	68	28	1.30								14	0.68		32
33	133.61	140	14	45	68	28	1.30								14	0.70		33
34	137.64	145	14	45	68	28	1.30								14	0.75		34
35	141.68	149	14	45	68	28	1.40		17	55	100	50	3.80		14	0.83		35
36	145.72	153	17	45	68	28	1.40								17	0.90		36
37	149.75	157	17	45	68	28	1.50								17	0.93		37
38	153.79	161	17	45	68	28	1.50								17	0.95		38
39	157.83	165	17	45	68	28	1.60								17	1.05		39
40	161.87	169	17	45	68	28	1.60		17	55	100	50	4.80		17	1.06		40
41	165.91	173	17	45	73	32	1.70								17	1.15		41
42	169.94	177	17	48	73	32	2.00								17	1.20		42
43	173.98	181	17	48	73	32	2.10								17	1.23		43
44	178.02	185	17	48	73	32	2.20								17	1.30		44
45	182.06	189	17	48	73	32	2.20	Rolled Steel Welded	17	63	97	50	5.50		17	1.36		45
48	194.18	201	17	48	73	32	2.30							Rolled Steel Welded	17	1.53		48
50	202.26	209	17	48	73	32	2.40								17	1.70		50
54	218.42	226	17	48	73	32	2.80		17	63	97	50	7.20		17	2.00		54
60	242.66	250	17	48	73	32	3.20		17	63	107	50	9.20		17	2.50		60
65	262.87	270	17	55	83	32	3.90								17	2.87		65
70	283.07	290	19	55	83	32	4.30								19	3.30		70
72	291.15	299	19	55	83	32	4.80								19	3.40		72
75	303.28	311	19	55	83	32	4.80								19	4.50		75

Note: 1. Determine the required bore size less than the Max. value shown above taking strength reduction into consideration.
2. The shaded area of the above table indicates heat treated teeth.
3. Due to material availability and production reasons, carbon steel may be used for teeth portion and rolled steel for hub and welded for double sprockets with 31 ~ 40 teeth without notice.
4. Those marked * have slot on hub.

DID 50 standard roller chain

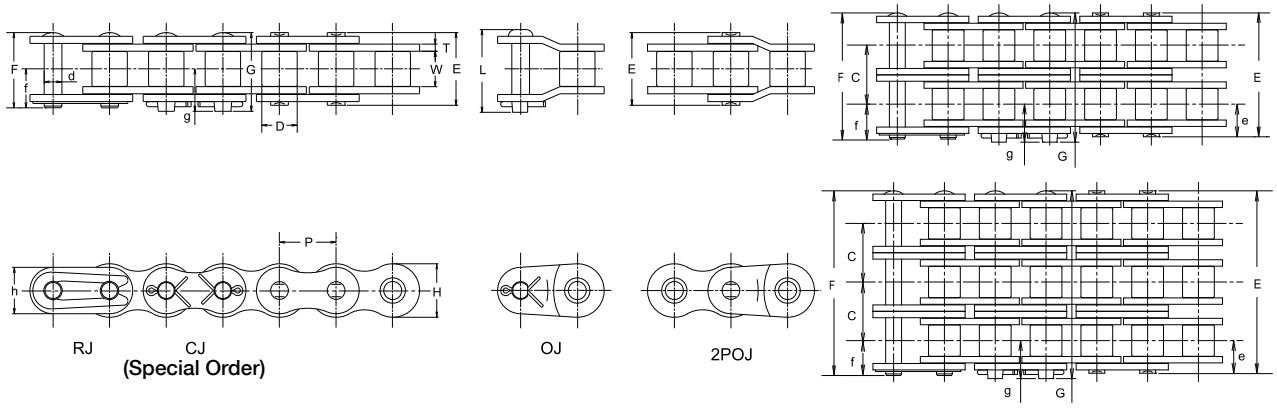

Dimensions

Unit (mm)

Chain No.		Pitch	Roller Link Width	Roller dia.	Pin								Transverse Pitch	Plate			JIS Min. Tensile Strength		DID Min. Tensile Strength		DID Avg. Tensile Strength		DID Max. Allowable Load		Approx. Weight (kg/m)
DID	JIS	P	W	D	d	E	F	G	L	e	f	g	C	T	H	h	kN	kgf	kN	kgf	kN	kgf	kN	kgf	
DID50	50					20.3	21.9	22.1	23.2								21.8	2,210	26.5	2,690	30.8	3,130	6.86	700	1.06
DID50-2	50-2					38.5	40.1	40.3	41.3								43.6	4,430	53	5,380	61.6	6,250	11.7	1,190	2.04
DID50-3	50-3	15.875	9.53	10.16	5.09	56.7	58.3	58.5	59.5	10.2	11.6	12.1	18.1	2.00	15.0	13.0	65.4	6,640	79.5	8,070	92.4	9,380	17.2	1,750	3.06
DID50-4	50-4					74.8	76.4	76.6	76.6								—	—	106	10,760	123	12,490	22.6	2,290	4.06
DID50-5	50-5					93.0	94.5	94.7	94.7								—	—	132	13,400	154	15,630	26.8	2,720	5.08

Note: The values of average tensile strength and Max. allowable tension are for chains.

Max. Kilowatt Ratings DID 50

Unit (kW)

No. of Teeth of Small Sprocket \ Type of Lubrication	Small Sprocket revolutions per minute (rpm) (See P132 for the details of type of lubrication A, B and C.)																		
	50	100	300	500	900	1200	1500	1800	2100	2400	2700	3000	3300	3500	4000	4500	5000	5400	5800
	A			B										C					
11	0.76	1.42	3.82	6.05	7.88	7.64	5.46	4.15	3.30	2.70	2.26	1.93	1.67	1.53	1.25	1.05	0.89	0.80	0.71
12	0.83	1.56	4.19	6.64	8.71	8.70	6.22	4.73	3.76	3.07	2.57	2.20	1.90	1.74	1.43	1.19	1.02	0.91	0.81
13	0.91	1.70	4.57	7.24	9.82	9.81	7.02	5.34	4.24	3.47	2.90	2.48	2.15	1.97	1.61	1.35	1.15	1.02	0.92
14	0.98	1.84	4.95	7.85	11.0	11.0	7.85	5.97	4.73	3.87	3.25	2.77	2.40	2.20	1.80	1.51	1.28	1.14	—
15	1.06	1.98	5.34	8.45	12.2	12.2	8.70	6.62	5.25	4.30	3.60	3.07	2.66	2.44	1.99	1.67	1.43	1.27	—
16	1.14	2.13	5.72	9.06	13.4	13.4	9.59	7.29	5.78	4.73	3.97	3.39	2.93	2.69	2.20	1.84	1.57	1.40	—
17	1.21	2.27	6.11	9.68	14.7	14.7	10.5	7.99	6.34	5.19	4.34	3.71	3.21	2.94	2.41	2.02	1.72	1.53	—
18	1.29	2.41	6.50	10.3	15.8	15.8	11.4	8.70	6.90	5.65	4.73	4.04	3.50	3.21	2.62	2.20	1.88	—	—
19	1.37	2.56	6.89	10.9	16.8	16.8	12.4	9.44	7.49	6.13	5.13	4.38	3.80	3.48	2.85	2.38	2.03	—	—
20	1.45	2.71	7.28	11.5	17.7	17.7	13.4	10.2	8.09	6.62	5.55	4.73	4.10	3.76	3.07	2.57	2.20	—	—
21	1.53	2.85	7.68	12.2	18.7	18.7	14.4	11.0	8.70	7.12	5.97	5.09	4.41	4.04	3.31	2.77	2.36	—	—
22	1.61	3.00	8.07	12.8	19.6	19.6	15.5	11.8	9.33	7.64	6.40	5.46	4.73	4.33	3.55	2.97	2.54	—	—
23	1.68	3.15	8.47	13.4	20.6	20.6	16.5	12.6	9.97	8.16	6.84	5.84	5.06	4.63	3.79	3.18	—	—	—
24	1.76	3.30	8.87	14.1	21.6	21.6	17.6	13.4	10.6	8.70	7.29	6.22	5.39	4.94	4.04	3.39	—	—	—
25	1.84	3.44	9.27	14.7	22.5	22.5	18.7	14.3	11.3	9.25	7.75	6.62	5.74	5.25	4.30	3.60	—	—	—
28	2.08	3.89	10.5	16.6	26.8	26.8	22.2	16.9	13.4	11.0	9.19	7.85	6.80	6.22	5.09	—	—	—	—
30	2.25	4.20	11.3	17.9	29.1	29.1	24.6	18.7	14.9	12.2	10.2	8.70	7.54	6.90	5.65	—	—	—	—
32	2.41	4.50	12.1	19.2	31.4	31.4	27.1	20.6	16.4	13.4	11.2	9.59	8.31	7.61	6.22	—	—	—	—
35	2.65	4.96	13.3	21.1	34.4	34.4	31.0	23.6	18.7	15.3	12.8	11.0	9.50	8.70	7.12	—	—	—	—
40	3.07	5.73	15.4	24.4	40.4	40.4	37.9	28.8	22.9	18.7	15.7	13.4	11.6	10.6	—	—	—	—	—
45	3.48	6.50	17.5	27.7	46.0	46.0	45.2	34.4	27.3	22.4	18.7	16.0	13.9	—	—	—	—	—	—

Note: Values in the table above are for simplex chain only. For multiplex chains, please multiply the coefficient of multi-strand. (See "Chain Selection" on P122).

DID 50 Standard Sprocket

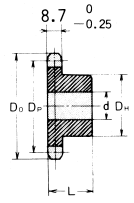

Single sprocket with hub on one side (Single B type)

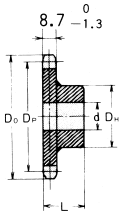

Single sprocket with hub on one side (Single BW type Welded)

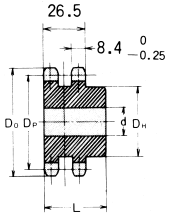

Double sprocket with hub on one side (Double B type)

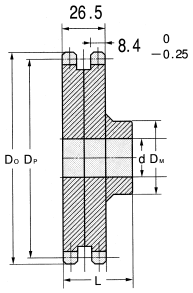

Double sprocket with hub on one side (Double BW type Welded)

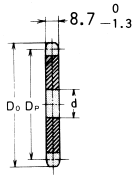

Flat plain (A type)

Unit (mm)

Number of teeth	Pitch dia. Dp	Tip dia. Do	Single sprocket with hub on one side (B type/ BW type)						Double sprocket with hub on one side (B type/ BW type)						Flat plain (A type)			Number of teeth
			Bore d		Hub		Approx. weight (Kg)	Material	Bore d		Hub		Approx. weight (Kg)	Material	Stock d	Approx. weight (Kg)	Material	
			Stock	Max.	(Dia.) DH	(Length) L			Stock	Max.	(Dia.) DH	(Length) L						
9	46.42	53	10	19	34 ※	25	0.20	Carbon Steel							10		Rolled Steel	9
10	51.37	58	10	25	40 ※	25	0.27								10	0.11		10
11	56.35	63	13	25	45 ※	25	0.33								13	0.15		11
12	61.34	68	13	32	50 ※	25	0.41		14	24	42	40	0.60		13	0.18		12
13	66.33	73	13	32	51 ※	25	0.46		14	28	47	40	0.73		13	0.18		13
14	71.34	79	13	35	52	25	0.52		14	32	52	40	0.87		13	0.20		14
15	76.35	84	13	38	57	25	0.62		14	35	57	40	1.00		13	0.26		15
16	81.37	89	13	40	62	25	0.72		14	39	62	45	1.30		13	0.30		16
17	86.39	94	13	45	67	25	0.83		14	45	67	45	1.50		13	0.35		17
18	91.42	99	13	47	72	28	1.00		14	47	72	45	1.70		13	0.40		18
19	96.45	104	13	47	73	28	1.10		14	52	79	45	2.00		13	0.44		19
20	101.48	109	14	47	73	28	1.20		18	55	82	45	2.20		14	0.50		20
21	106.51	114	14	47	73	28	1.20		18	60	89	45	2.50		14	0.54		21
22	111.55	119	16	47	73	28	1.30		18	63	92	50	2.90		16	0.59		22
23	116.59	124	16	47	73	28	1.30		18	67	99	50	3.30		16	0.65		23
24	121.62	129	16	47	73	28	1.40		18	70	102	50	3.60	Carbon Steel	16	0.70		24
25	126.66	134	16	47	73	28	1.50		18	75	109	50	4.00		16	0.80		25
26	131.70	139	16	48	73	28	1.50		18	75	114	50	4.00		16	0.85		26
27	136.74	144	16	48	73	28	1.50								16	0.90		27
28	141.79	149	16	48	73	28	1.60								16	1.00		28
29	146.83	154	16	48	73	28	1.60								16	1.10		29
30	151.87	160	16	48	73	28	1.70		23	63	120	50	5.20		16	1.15		30
31	156.92	165	16	48	73	28	1.80								16	1.20		31
32	161.96	170	16	48	73	28	1.80								16	1.26		32
33	167.01	175	16	48	73	28	1.90								16	1.35		33
34	172.05	180	16	48	73	28	2.10								16	1.45		34
35	177.10	185	16	48	73	28	2.20		23	63	120	50	6.40		16	1.55		35
36	182.15	191	19	55	83	35	2.70								19	1.67		36
37	187.19	196	19	55	83	35	2.80								19	1.80		37
38	192.24	201	19	55	83	35	2.90								19	1.85		38
39	197.29	206	19	55	83	35	2.90								19	2.00		39
40	202.33	211	19	55	83	35	3.10		23	66	120	56	8.30		19	2.05		40
41	207.38	216	19	55	83	35	3.20								19	2.12		41
42	212.43	221	19	55	83	35	3.30								19	2.30		42
43	217.48	226	19	55	83	35	3.40								19	2.43		43
44	222.53	231	19	55	83	35	3.50								19	2.60		44
45	227.58	237	19	55	83	35	3.60	Rolled Steel Welded	23	66	107	56	9.70		19	2.60		45
48	242.73	252	19	55	83	35	4.00							Rolled Steel Welded	19	3.00		48
50	252.82	262	19	55	83	35	4.30								19	3.30		50
54	273.03	282	19	55	83	35	4.80		23	66	107	63	14.20		19	3.90		54
60	303.33	312	19	55	83	35	5.60		23	66	107	63	16.60		19	4.80		60
65	328.58	338	19	63	93	40	6.90								19	5.80		65
70	353.84	363	20	63	93	40	7.70								20	6.35		70
72	363.94	373	20	63	93	40										6.60		72
75	379.10	388	20	63	93	40	8.60								20	7.00		75

Note: 1. Determine the required bore size less than the Max. value shown above taking strength reduction into consideration.
2. The shaded area of the above table indicates heat treated teeth.
3. Due to material availability and production reasons, carbon steel may be used for teeth portion and rolled steel for hub and welded for double sprockets with 26 ~ 31 teeth without notice.
4. Those marked * have slot on hub.

DID 60 standard roller chain

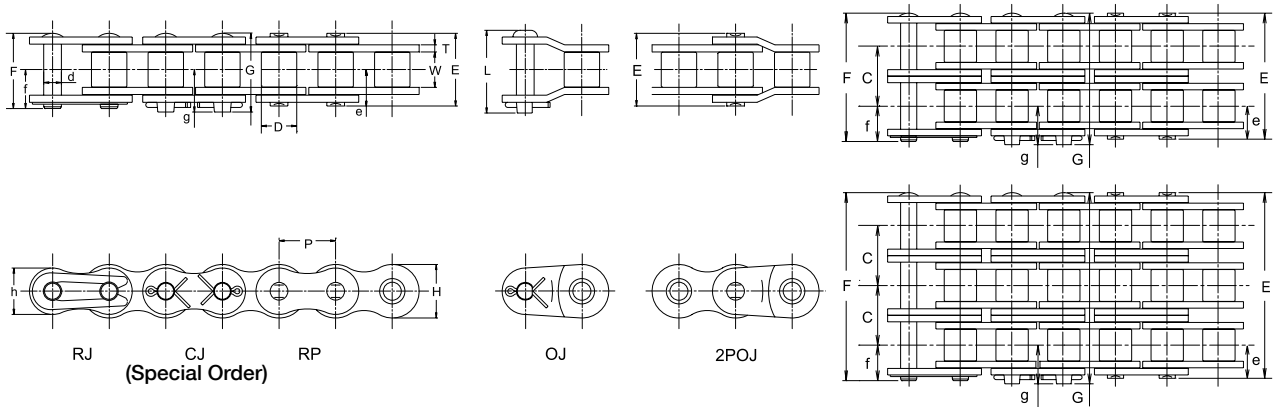

Dimensions

Unit (mm)

Chain No.		Pitch	Roller Link Width	Roller dia.	Pin								Transverse Pitch	Plate			JIS Min. Tensile Strength		DID Min. Tensile Strength		DID Avg. Tensile Strength		DID Max. Allowable Load		Approx. Weight (kg/m)
DID	JIS	P	W	D	d	E	F	G	L	e	f	g	C	T	H	h	kN	kgf	kN	kgf	kN	kgf	kN	kgf	
DID60	60					25.4	26.9	27.9	29.8								31.3	3,180	35.3	3,580	44.1	4,480	9.31	950	1.53
DID60-2	60-2					48.3	49.8	50.9	52.5								62.6	6,360	70.6	7,170	88.2	8,950	15.8	1,600	3.03
DID60-3	60-3	19.05	12.70	11.91	5.96	71.2	72.7	73.7	75.3	12.7	14.3	15.1	22.8	2.40	18.1	15.6	93.9	9,530	106	10,760	132	13,400	23.3	2,370	4.51
DID60-4	60-4					94.0	95.5	96.5	96.5								—	—	141	14,310	176	17,870	30.7	3,120	6.03
DID60-5	60-5					116.8	118.8	119.3	119.3								—	—	177	17,970	221	22,440	36.3	3,690	7.53

Note: The values of average tensile strength and Max. allowable tension are for chains.

Max. Kilowatt Ratings DID 60

Unit (kW)

No. of Teeth of Small Sprocket \ Type of Lubrication	Small Sprocket revolutions per minute (rpm) (See P132 for the details of type of lubrication A, B and C.)																			
	50	100	200	500	700	900	1200	1400	1500	1600	1800	2000	2200	2400	2600	2800	3000	3500	3800	4000
	A			B												C				
11	1.26	2.36	4.40	10.1	12.7	12.7	8.84	7.01	6.32	5.74	4.81	4.10	3.56	3.12	2.77	2.48	2.23	1.77	1.56	1.45
12	1.39	2.59	4.84	11.0	13.9	13.9	10.1	7.99	7.20	6.54	5.48	4.68	4.05	3.56	3.15	2.82	2.54	2.02	1.78	1.65
13	1.51	2.83	5.28	12.0	15.2	15.2	11.4	9.01	8.12	7.37	6.18	5.27	4.57	4.01	3.56	3.18	2.87	2.28	2.01	1.86
14	1.64	3.06	5.72	13.1	16.7	16.7	12.7	10.1	9.08	8.24	6.90	5.89	5.11	4.48	3.98	3.56	3.21	2.54	2.25	2.08
15	1.77	3.30	6.16	14.1	18.5	18.5	14.1	11.2	10.1	9.14	7.66	6.54	5.67	4.97	4.41	3.94	3.56	2.82	2.49	2.31
16	1.89	3.54	6.60	15.1	20.4	20.4	15.5	12.3	11.1	10.1	8.44	7.20	6.24	5.48	4.86	4.35	3.92	3.11	2.75	2.54
17	2.02	3.78	7.05	16.1	21.8	22.3	17.0	13.5	12.2	11.0	9.24	7.89	6.84	6.00	5.32	4.76	4.29	3.40	3.01	2.79
18	2.15	4.02	7.50	17.1	23.2	23.7	18.5	14.7	13.2	12.0	10.1	8.60	7.45	6.54	5.80	5.19	4.68	3.71	3.28	3.04
19	2.28	4.26	7.95	18.1	24.6	25.1	20.1	15.9	14.4	13.0	10.9	9.32	8.08	7.09	6.29	5.63	5.07	4.02	3.56	3.29
20	2.41	4.50	8.40	19.2	26.0	26.6	21.7	17.2	15.5	14.1	11.8	10.1	8.73	7.66	6.79	6.08	5.48	4.35	3.84	3.56
21	2.54	4.75	8.86	20.2	27.4	28.0	23.3	18.5	16.7	15.1	12.7	10.8	9.39	8.24	7.31	6.54	5.89	4.68	4.13	3.83
22	2.67	4.99	9.32	21.3	28.8	29.5	25.0	19.8	17.9	16.2	13.6	11.6	10.1	8.84	7.84	7.01	6.32	5.01	4.43	4.10
23	2.80	5.24	9.77	22.3	30.2	30.9	26.7	21.2	19.1	17.4	14.5	12.4	10.8	9.45	8.38	7.49	6.76	5.36	4.74	4.39
24	2.94	5.48	10.2	23.4	31.6	32.5	28.5	22.6	20.4	18.5	15.5	13.2	11.5	10.1	8.93	7.99	7.20	5.71	5.05	4.68
25	3.07	5.73	10.7	24.4	33.0	34.5	30.3	24.0	21.7	19.7	16.5	14.1	12.2	10.7	9.49	8.49	7.66	6.08	5.37	4.97
28	3.47	6.48	12.1	27.6	37.3	40.9	35.9	28.5	25.7	23.3	19.5	16.7	14.5	12.7	11.3	10.1	9.08	7.20	6.37	—
30	3.74	6.98	13.0	29.7	40.2	44.9	39.8	31.6	28.5	25.9	21.7	18.5	16.0	14.1	12.5	11.2	10.1	7.99	—	—
32	4.01	7.48	14.0	31.9	43.1	48.1	43.9	34.8	31.4	28.5	23.9	20.4	17.7	15.5	13.8	12.3	11.1	8.80	—	—
35	4.41	8.24	15.4	35.1	47.5	53.0	50.2	39.8	35.9	32.6	27.3	23.3	20.2	17.7	15.7	14.1	12.7	—	—	—
40	5.10	9.52	17.8	40.6	54.9	61.3	61.3	48.6	43.9	39.8	33.4	28.5	24.7	21.7	19.2	17.2	15.5	—	—	—
45	5.79	10.8	20.2	46.1	62.3	69.4	69.4	58.0	52.3	47.5	39.8	34.0	29.5	25.9	22.9	20.5	—	—	—	—

Note: Values in the table above are for simplex chain only. For multiplex chains, please multiply the coefficient of multi-strand. (See "Chain Selection" on P122).

DID 60 Standard Sprocket

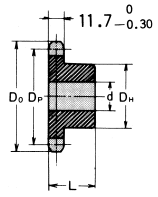

Single sprocket with hub on one side (Single B type)

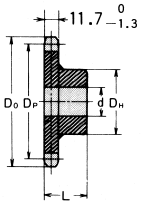

Single sprocket with hub on one side (Single BW type Welded)

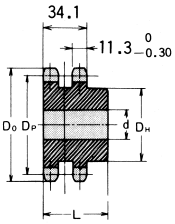

Double sprocket with hub on one side (Double B type)

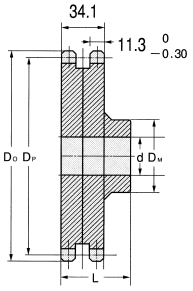

Double sprocket with hub on one side (Double BW type Welded)

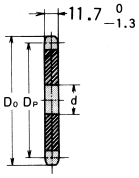

Flat plain (A type)

Unit (mm)

Number of teeth	Pitch dia. Dp	Tip dia. Do	Single sprocket with hub on one side (B type/ BW type)						Double sprocket with hub on one side (B type/ BW type)						Flat plain (A type)			Number of teeth
			Bore d		Hub		Approx. weight (Kg)	Material	Bore d		Hub		Approx. weight (Kg)	Material	Stock d	Approx. weight (Kg)	Material	
			Stock	Max.	(Dia.) Dʜ	(Length) L			Stock	Max.	(Dia.) Dʜ	(Length) L						
9	55.70	63	10	24	42 ※	32	0.40	Carbon Steel						Carbon Steel	10		Rolled Steel	9
10	61.65	70	14	30	49 ※	32	0.49								10	0.20		10
11	67.62	76	14	32	51 ※	32	0.60								14	0.26		11
12	73.60	82	14	35	51	32	0.69		16	32	51	50	1.10		14	0.30		12
13	79.60	88	14	38	57	32	0.81		18	35	57	50	1.30		14	0.37		13
14	85.61	94	16	40	62	32	0.96		18	39	62	56	1.70		16	0.43		14
15	91.63	101	16	45	68	32	1.10		18	45	68	56	2.00		16	0.51		15
16	97.65	107	16	50	73	32	1.30		18	50	76	56	2.40		16	0.60		16
17	103.67	113	16	50	73	32	1.40		18	55	82	56	2.80		16	0.68		17
18	109.70	119	16	55	83	40	2.00		18	59	87	56	3.10		16	0.75		18
19	115.74	125	16	55	83	40	2.10		18	63	95	56	3.60		16	0.88		19
20	121.78	131	16	55	83	40	2.20		20	69	101	56	4.10		16	0.96		20
21	127.82	137	16	55	83	40	2.30		20	75	107	56	4.50		16	1.10		21
22	133.86	143	16	55	83	40	2.40		20	78	113	56	5.00		16	1.15		22
23	139.90	149	16	55	83	40	2.50		20	80	119	56	5.30		16	1.20		23
24	145.95	155	16	55	83	40	2.50		20	80	120	56	5.40		16	1.40		24
25	151.99	162	16	55	83	40	2.70		20	80	120	56	6.00		16	1.51		25
26	158.04	168	16	55	83	40	2.90		20	80	120	56	5.30		16	1.65		26
27	164.09	174	16	55	83	40	3.00								16	1.70		27
28	170.14	180	16	55	83	40	3.10								16	1.90		28
29	176.19	186	16	55	83	40	3.30								16	2.05		29
30	182.25	193	20	55	83	40	3.40		20	85	130	56	8.40		20	2.25		30
31	188.30	199	20	55	83	40	3.50								20	2.40		31
32	194.35	205	20	55	83	40	3.70								20	2.55		32
33	200.41	211	20	55	83	40	3.80								20	2.70		33
34	206.46	217	20	55	83	40	4.00								20	2.90		34
35	212.52	223	20	55	83	40	4.20		20	85	130	56	11.00		20	3.12		35
36	218.57	229	20	55	83	40	4.40								20	3.21		36
37	224.63	235	20	55	83	40	4.60								20	3.45		37
38	230.69	241	20	55	83	40	4.80								20	3.56		38
39	236.74	248	20	55	83	40	4.90								20	3.83		39
40	242.80	253	20	55	83	40	5.10		20	75	117	56	13.00		20	4.05		40
41	248.86	260	20	63	93	45	5.50	Rolled Steel Welded							20	4.22		41
42	254.92	266	20	63	93	45	6.00								20	4.37		42
43	260.98	272	20	63	93	45	6.20								20	4.61		43
44	267.03	278	20	63	93	45	6.40								20	4.89		44
45	273.09	284	20	63	93	45	6.70		20	75	117	71	18.00	Rolled Steel Welded	20	5.10		45
48	291.27	302	20	63	93	45	7.40								20	5.75		48
50	303.39	314	20	63	93	45	7.80								20	6.25		50
54	327.63	338	20	63	93	45	8.80		20	75	117	71	24.20		20	7.25		54
60	363.99	375	20	63	93	45	10.60		20	85	127	71	29.80		20	9.00		60
65	394.30	405	20	75	107	45	12.80								20	10.60		65
70	424.61	436	20	75	107	45	14.40								20	12.20		70
72	436.73	448													20	12.50		72
75	454.92	466	20	75	107	45	16.30								20	13.00		75

Note: 1. Determine the required bore size less than the Max. value shown above taking strength reduction into consideration.
2. The shaded area of the above table indicates heat treated teeth.
3. Due to material availability and production reasons, carbon steel may be used for teeth portion and rolled steel for hub and welded for double sprockets with 23 ~ 35 teeth without notice.
4. Those marked * have slot on hub.

DID 80 standard roller chain

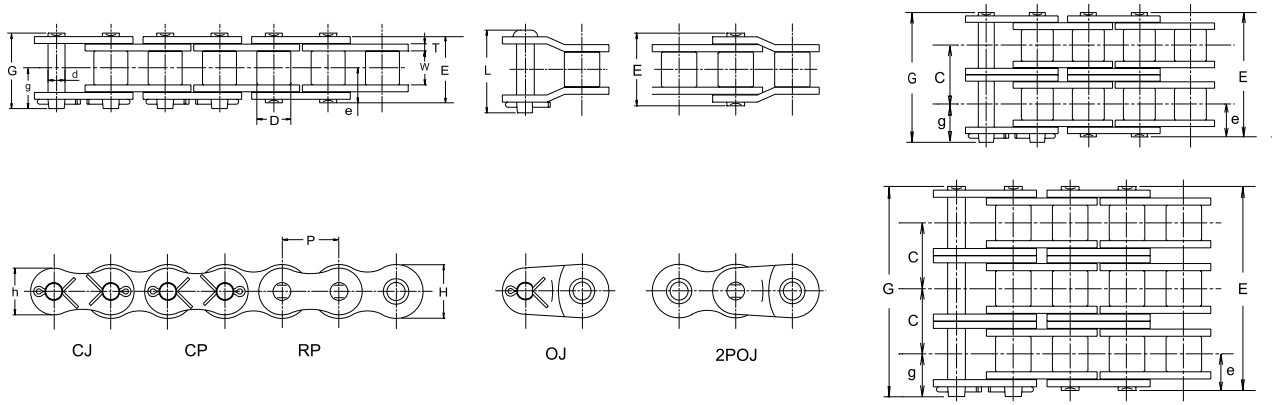

Dimensions

Unit (mm)

Chain No.		Pitch	Roller Link Width	Roller dia.	Pin						Transverse Pitch	Plate			JIS Min. Tensile Strength		DID Min. Tensile Strength		DID Avg. Tensile Strength		DID Max. Allowable Load		Approx. Weight
DID	JIS	P	W	D	d	E	G	L	e	g	C	T	H	h	kN	kgf	kN	kgf	kN	kgf	kN	kgf	(kg/m)
DID80	80					32.6	35.4	37.1							55.6	5,640	71.6	7,270	78.4	7,960	14.7	1,490	2.55
DID80-2	80-2					61.9	64.7	66.3							111.2	11,290	143	14,520	157	15,940	25	2,540	5.07
DID80-3	80-3	25.40	15.88	15.88	7.94	91.3	94.0	95.1	16.3	19.00	29.3	3.20	24.0	20.8	166.8	16,930	215	21,830	235	23,860	36.8	3,740	7.58
DID80-4	80-4					120.6	123.3	124.4							—	—	286	29,040	314	31,880	48.5	4,920	10.1
DID80-5	80-5					149.9	152.6	153.7							—	—	358	36,350	392	39,800	57.3	5,820	12.6

Note: The values of average tensile strength and Max. allowable tension are for chains.

Max. Kilowatt Ratings DID 80

Unit (kW)

No. of Teeth of Small Sprocket \ Type of Lubrication	Small Sprocket revolutions per minute (rpm) (See P132 for the details of type of lubrication A, B and C.)																								
	20	50	100	200	300	400	500	700	900	1000	1200	1400	1500	1600	1800	2000	2200	2400	2600	2700	2800	3000	3200	3400
	A			B											C									
11	1.22	2.79	5.21	9.73	14.0	18.2	22.2	22.8	17.1	14.6	11.1	8.83	7.96	7.22	6.05	5.17	4.48	3.93	3.48	3.29	3.12	2.81	2.55	2.33
12	1.34	3.07	5.73	10.7	15.4	20.0	24.4	25.0	19.5	16.7	12.7	10.1	9.07	8.23	6.90	5.89	5.10	4.48	3.97	3.75	3.55	3.20	2.91	2.65
13	1.46	3.34	6.25	11.7	16.8	21.8	26.6	27.3	22.0	18.8	14.3	11.3	10.2	9.28	7.78	6.64	5.75	5.05	4.48	4.23	4.01	3.61	3.28	2.99
14	1.59	3.62	6.77	12.6	18.2	23.6	28.8	29.5	24.6	21.0	16.0	12.7	11.4	10.4	8.69	7.42	6.43	5.64	5.01	4.73	4.48	4.04	3.66	3.35
15	1.71	3.90	7.29	13.6	19.6	25.4	31.1	32.6	27.3	23.3	17.7	14.1	12.7	11.5	9.64	8.23	7.13	6.26	5.55	5.25	4.97	4.48	4.06	—
16	1.83	4.19	7.82	14.6	21.0	27.2	33.3	35.9	30.1	25.7	19.5	15.5	14.0	12.7	10.6	9.07	7.86	6.90	6.12	5.78	5.47	4.93	4.48	—
17	1.96	4.47	8.35	15.6	22.4	29.1	35.5	39.3	32.9	28.1	21.4	17.0	15.3	13.9	11.6	9.93	8.61	7.55	6.70	6.33	5.99	5.40	4.90	—
18	2.08	4.75	8.88	16.6	23.9	30.9	37.8	42.8	35.9	30.6	23.3	18.5	16.7	15.1	12.7	10.8	9.38	8.23	7.30	6.90	6.53	5.89	5.34	—
19	2.21	5.04	9.41	17.6	25.3	32.8	40.1	46.0	38.9	33.2	25.3	20.0	18.1	16.4	13.8	11.7	10.2	8.93	7.92	7.48	7.08	6.39	—	—
20	2.33	5.33	9.95	18.6	26.8	34.7	42.4	48.7	42.0	35.9	27.3	21.7	19.5	17.7	14.9	12.7	11.0	9.64	8.55	8.08	7.65	6.90	—	—
21	2.46	5.62	10.5	19.6	28.2	36.5	44.7	51.3	45.2	38.6	29.4	23.3	21.0	19.1	16.0	13.6	11.8	10.4	9.20	8.69	8.23	7.42	—	—
22	2.59	5.91	11.0	20.6	29.7	38.4	47.0	53.9	48.5	41.4	31.5	25.0	22.5	20.4	17.1	14.6	12.7	11.1	9.86	9.32	8.83	7.96	—	—
23	2.71	6.20	11.6	21.6	31.1	40.3	49.3	56.6	51.8	44.2	33.6	26.7	24.1	21.9	18.3	15.6	13.6	11.9	10.5	9.96	9.44	3.65	—	—
24	2.84	6.49	12.1	22.6	32.6	42.2	51.6	59.3	55.2	47.1	35.9	28.5	25.7	23.3	19.5	16.7	14.4	12.7	11.2	10.6	10.1	—	—	—
25	2.97	6.78	12.7	23.6	34.0	44.1	53.9	61.9	58.7	50.1	38.1	30.3	27.3	24.8	20.8	17.7	15.4	13.5	12.0	11.3	10.7	—	—	—
28	3.36	7.67	14.3	26.7	38.5	49.8	60.9	73.5	69.6	59.4	45.2	35.9	32.3	29.4	24.6	21.0	18.2	16.0	14.2	13.4	—	—	—	—
30	3.62	8.26	15.4	28.8	41.5	53.7	65.6	79.6	77.2	65.9	50.1	39.8	35.9	32.6	27.3	23.3	20.2	17.7	15.7	6.03	—	—	—	—
32	3.88	8.86	16.5	30.9	44.4	57.6	70.4	85.0	85.0	72.6	55.2	43.8	39.5	35.9	30.1	25.7	22.2	19.5	—	—	—	—	—	—
35	4.27	9.76	18.2	34.0	49.0	63.4	77.5	95.0	95.0	83.0	63.2	50.1	45.2	41.0	34.4	29.4	25.4	—	—	—	—	—	—	—
40	4.94	11.3	21.0	39.3	56.6	73.3	89.6	110	110	101	77.2	61.2	55.2	50.1	42	35.9	—	—	—	—	—	—	—	—
45	5.61	12.8	23.9	44.6	64.2	83.2	102	126	126	121	92.1	73.1	65.9	59.8	50.1	—	—	—	—	—	—	—	—	—

Note: 1. Values in the table above are for simplex chain only. For multiplex chains, please multiply the coefficient of multi-strand. (See "Chain Selection" on P122).
2. Consult us when the ratings beyond the dotted line to rightward.

DID 80 Standard Sprocket

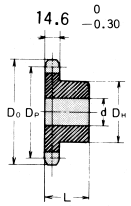

Single sprocket with hub on one side (Single B type)

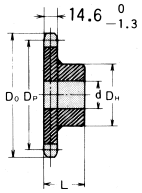

Single sprocket with hub on one side (Single BW type Welded)

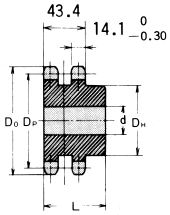

Double sprocket with hub on one side (Double B type)

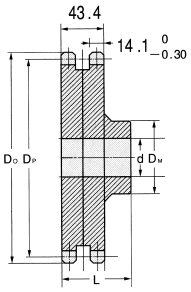

Double sprocket with hub on one side (Double BW type Welded)

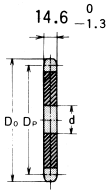

Flat plain (A type)

Unit (mm)

Number of teeth	Pitch dia. Dp	Tip dia. Do	Single sprocket with hub on one side (B type/ BW type)						Double sprocket with hub on one side (B type/ BW type)						Flat plain (A type)			Number of teeth
			Bore d		Hub		Approx. weight (Kg)	Material	Bore d		Hub		Approx. weight (Kg)	Material	Stock d	Approx. weight (Kg)	Material	
			Stock	Max.	(Dia.) DH	(Length) L			Stock	Max.	(Dia.) DH	(Length) L						
9	74.26	85	14	35	58 ※	40	0.87	Carbon Steel							11			9
10	82.20	93	17	32	52	40	0.97								17	0.58		10
11	90.16	101	17	38	60	40	1.20								17	0.62		11
12	98.14	110	17	45	67	40	1.50		23	45.5	67	63	2.50		17	0.82		12
13	106.14	118	17	50	77	40	1.90		23	50	77	63	3.10		17	0.87		13
14	114.15	126	17	50	77	40	2.00		23	58	86	63	3.70		17	1.02		14
15	122.17	134	20	63	93	40	2.60		23	64	94	63	4.30	Carbon Steel	20	1.20		15
16	130.20	142	20	63	93	40	2.80		23	70	102	71	5.50		20	1.35		16
17	138.23	151	20	63	93	40	3.00		23	76	110	71	6.40		20	1.54		17
18	146.27	159	20	63	93	40	3.20		23	76	110	71	6.00		20	1.75		18
19	154.32	167	20	63	93	40	3.40		23	76	110	71	6.40		20	1.95		19
20	162.37	175	20	63	93	40	3.60		23	75	107	71	7.60		20	2.15		20
21	170.42	183	20	63	93	40	3.80		23	75	107	71	7.80		20	2.41		21
22	178.48	192	20	75	107	45	4.80		25	80	117	71	8.80		20	2.63		22
23	186.54	200	20	75	107	45	5.10		25	80	117	71	9.30		20	2.90		23
24	194.60	208	20	75	107	45	5.40		25	80	117	80	10.50		20	3.20		24
25	202.66	216	20	75	107	45	5.60		25	80	117	80	11.10		20	3.45		25
26	210.72	224	20	75	107	45	5.90		25	80	117	80	11.70		20	3.70		26
27	218.79	233	20	75	107	45	6.10								20	3.96		27
28	226.86	241	20	75	107	45	6.50								20	4.26		28
29	234.93	249	20	75	107	45	6.90								20	4.65		29
30	243.00	257	20	75	107	45	7.10		25	80	117	80	17.50		20	5.00	Rolled Steel	30
31	251.07	265	20	75	107	45	7.40								20	5.30		31
32	259.14	273	20	75	107	45	7.80								20	5.60		32
33	267.21	281	20	75	107	45	8.10								20	6.00		33
34	275.28	289	20	75	107	45	8.50								20	6.40		34
35	283.36	297	20	75	107	45	8.90		25	80	117	80	23.50		20	6.85		35
36	291.43	306	20	80	117	50	10.10	Rolled Steel Welded						Rolled Steel Welded	20	7.20		36
37	299.51	314	20	80	117	50	10.50								20	7.40		37
38	307.58	322	20	80	117	50	10.90								20	8.00		38
39	315.66	330	20	80	117	50	11.50								20	8.47		39
40	323.74	338	20	80	117	50	11.80		25	89	127	90	30.50		20	9.00		40
41	331.81	346	20	80	117	50	12.30								20	9.42		41
42	339.89	354	20	80	117	50	12.70								20	9.75		42
43	347.97	362	20	80	117	50	13.20								20	10.34		43
44	356.05	370	20	80	117	50	13.70								20	10.65		44
45	364.12	378	20	80	117	50	14.20		25	89	127	90			20	11.25		45
48	388.36	403	20	80	117	50	15.80								20	13.00		48
50	404.52	419	20	80	117	50	16.80		25	89	127	90			20	14.80		50
54	436.84	451	20	80	117	50	19.20								20	17.00		54
60	485.33	500	30	80	117	50	23.10		30	89	127	90	65.00		30	21.00		60
65	525.73	540	30	89	127	63	28.50								30	25.00		65
70	566.15	581	30	89	127	63	32.10								30	28.30		70
75	606.56	621	30	89	127	63	36.20								30	32.00		75

Note: 1. Determine the required bore size less than the Max. value shown above taking strength reduction into consideration.
2. The shaded area of the above table indicates heat treated teeth.
3. Those marked * have slot on hub.

DID 100 standard roller chain

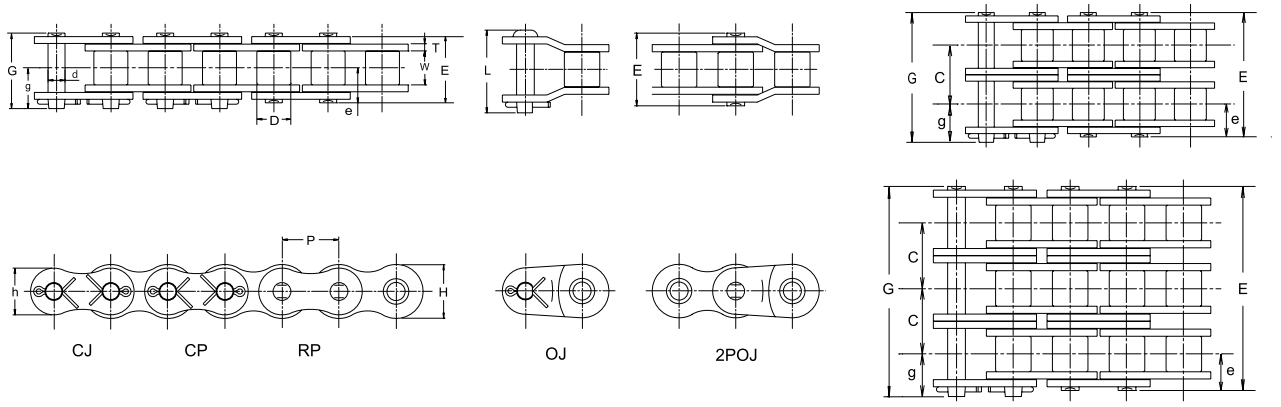

Dimensions

Unit (mm)

Chain No.		Pitch	Roller Link Width	Roller dia.	Pin						Transverse Pitch	Plate			JIS Min. Tensile Strength		DID Min. Tensile Strength		DID Avg. Tensile Strength		DID Max. Allowable Load		Approx. Weight
DID	JIS	P	W	D	d	E	G	L	e	g	C	T	H	h	kN	kgf	kN	kgf	kN	kgf	kN	kgf	(kg/m)
DID100	100					39.5	42.6	45.2							87	8,830	108	10,960	118	11,980	22.5	2,280	3.79
DID100-2	100-2					75.3	78.3	81.1							174	17,660	216	21,930	236	23,960	38.3	3,890	7.53
DID100-3	100-3	31.75	19.05	19.05	9.54	111.2	114.2	115.2	19.8	22.7	35.8	4.0	29.9	26.0	261	26,500	324	32,890	354	35,940	56.3	5,720	11.3
DID100-4	100-4					147.0	150.0	151.0							—	—	432	43,860	472	47,920	74.3	7,540	15.1
DID100-5	100-5					182.9	185.9	186.9							—	—	540	54,820	590	59,900	87.8	8,910	18.9

Note: The values of average tensile strength and Max. allowable tension are for chains.

Max. Kilowatt Ratings DID 100

Unit (kW)

No. of Teeth of Small Sprocket \ Type of Lubrication	Small Sprocket revolutions per minute (rpm) (See P132 for the details of type of lubrication A, B and C.)																								
	10	25	50	100	200	300	400	500	600	700	800	900	1000	1100	1200	1300	1400	1500	1600	1800	2000	2200	2400	2500	2700
	A				B										C										
11	1.17	2.67	4.99	9.31	17.4	25.0	32.4	35.8	35.8	29.9	24.4	20.5	17.5	15.2	13.3	11.8	10.6	9.51	8.64	7.24	6.18	5.35	4.70	4.42	4.17	1.08
12	1.28	2.93	5.48	10.2	19.1	27.5	35.6	39.4	39.4	34.0	27.8	23.3	19.9	17.3	15.2	13.4	12.0	10.8	9.84	8.25	7.04	6.10	5.35	5.04	4.75	—
13	1.40	3.20	5.97	11.2	20.8	30.0	38.9	42.9	42.9	38.4	31.4	26.3	22.5	19.5	17.1	15.2	13.6	12.2	11.1	9.30	7.94	6.88	6.04	5.68	5.35	—
14	1.52	3.47	6.47	12.1	22.6	32.5	42.1	46.5	46.5	42.9	35.1	29.4	25.1	21.8	19.1	16.9	15.2	13.7	12.4	10.4	8.87	7.69	6.75	6.35	—	—
15	1.63	3.73	6.97	13.0	24.3	35.0	45.3	50.1	50.1	47.5	38.9	32.6	27.8	24.1	21.2	18.8	16.8	15.2	13.8	11.5	9.84	8.53	7.48	7.04	—	—
16	1.75	4.00	7.48	14.0	26.1	37.5	48.6	53.7	53.7	52.4	42.9	35.9	30.7	26.6	23.3	20.7	18.5	16.7	15.2	12.7	10.8	9.40	8.25	7.76	—	—
17	1.87	4.28	7.98	14.9	27.8	40.1	51.9	57.4	57.4	57.4	47.0	39.4	33.6	29.1	25.6	22.7	20.3	18.3	16.6	13.9	11.9	10.3	9.03	—	—	—
18	1.99	4.55	8.49	15.9	29.6	42.6	55.2	62.5	62.5	62.5	51.2	42.9	36.6	31.7	27.8	24.7	22.1	19.9	18.1	15.2	12.9	11.2	9.84	—	—	—
19	2.11	4.82	9.00	16.8	31.4	45.2	58.5	67.8	67.8	67.8	55.5	46.5	39.7	34.4	30.2	26.8	24.0	21.6	19.6	16.4	14.0	12.2	10.7	—	—	—
20	2.23	5.10	9.52	17.8	33.2	47.8	61.9	73.2	73.2	73.2	59.9	50.2	42.9	37.2	32.6	28.9	25.9	23.3	21.2	17.8	15.2	13.1	—	—	—	—
21	2.35	5.37	10.0	18.7	34.9	50.3	65.2	78.8	78.8	78.8	64.5	54.0	46.1	40.0	35.1	31.1	27.8	25.1	22.8	19.1	16.3	14.1	—	—	—	—
22	2.47	5.65	10.6	19.7	36.7	52.9	68.6	83.8	84.5	84.5	69.1	57.9	49.5	42.9	37.6	33.4	29.9	26.9	24.4	20.5	17.5	15.2	—	—	—	—
23	2.60	5.93	11.1	20.7	38.6	55.5	71.9	88.0	90.3	90.3	73.9	61.9	52.9	45.8	40.2	35.7	31.9	28.8	26.1	21.9	18.7	16.2	—	—	—	—
24	2.72	6.21	11.6	21.6	40.4	58.1	75.3	92.1	95.6	95.6	78.8	66.0	56.4	48.9	42.9	38.0	34.0	30.7	27.8	23.3	19.9	17.3	—	—	—	—
25	2.84	6.49	12.1	22.6	42.2	60.8	78.7	96.2	100	100	83.7	70.2	59.9	51.9	45.6	40.4	36.2	32.6	29.6	24.8	21.2	18.3	—	—	—	—
28	3.21	7.33	13.7	25.6	47.7	68.7	89.0	109	113	113	99.3	83.2	71.0	61.6	54.0	47.9	42.9	38.7	35.1	29.4	25.1	—	—	—	—	—
30	3.46	7.90	14.8	27.5	51.4	74.0	95.9	117	122	122	110	92.2	78.8	68.3	59.9	53.1	47.5	42.9	38.9	32.6	—	—	—	—	—	—
32	3.71	8.47	15.8	29.5	55.1	79.3	103	126	130	130	121	102	86.8	75.2	66.0	58.5	52.4	47.2	42.9	35.9	—	—	—	—	—	—
35	4.09	9.33	17.4	32.5	60.7	87.4	113	138	147	147	139	116	99.3	86.0	75.5	67.0	59.9	54.0	49.0	—	—	—	—	—	—	—
40	4.72	10.8	20.1	37.6	70.1	101	131	160	170	170	169	142	121	105	92.2	81.8	73.2	66.0	—	—	—	—	—	—	—	—
45	5.36	12.2	22.9	42.7	79.6	115	149	182	194	194	194	169	145	125	110	97.6	—	—	—	—	—	—	—	—	—	—

Note: 1. Values in the table above are for simplex chain only. For multiplex chains, please multiply the coefficient of multi-strand. (See "Chain Selection" on P122).
2. Please consult with us when the ratings beyond the dotted line to rightward.

DID 100 Standard Sprocket

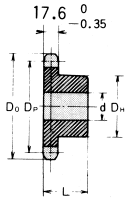

Single sprocket with hub on one side (Single B type)

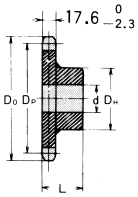

Single sprocket with hub on one side (Single BW type Welded)

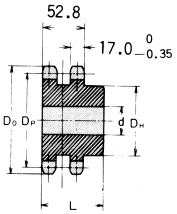

Double sprocket with hub on one side (Double B type)

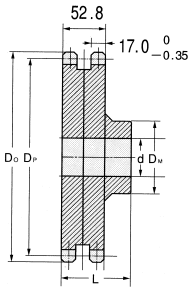

Double sprocket with hub on one side (Double BW type Welded)

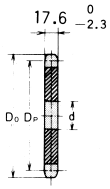

Flat plain (A type)

Unit (mm)

Number of teeth	Pitch dia. Dp	Tip dia. Do	Single sprocket with hub on one side (B type/ BW type)						Double sprocket with hub on one side (B type/ BW type)						Flat plain (A type)			Number of teeth
			Bore d		Hub		Approx. weight (Kg)	Material	Bore d		Hub		Approx. weight (Kg)	Material	Stock d	Approx. weight (Kg)	Material	
			Stock	Max.	(Dia.) Dʜ	(Length) L			Stock	Max.	(Dia.) Dʜ	(Length) L						
10	102.75	116	20	43	65	50	1.90	Carbon Steel							20	0.90		10
11	112.70	127	20	50	75	50	2.30								20	1.10		11
12	122.67	137	20	57	86	50	2.90		28	58	86	80	5.00		20	1.40		12
13	132.67	147	20	59	88	50	3.10		28	65	95	80	6.00		20	1.70		13
14	142.68	157	20	60	88	50	3.60		28	72	105	80	7.10		20	2.00		14
15	152.71	167	20	65	98	50	4.20		28	66	98	80	7.10	Carbon Steel	20	2.30		15
16	162.75	178	20	65	98	50	4.60		28	66	98	80	7.70		20	2.60		16
17	172.79	188	20	75	107	50	5.30		28	75	107	80	8.90		20	2.90		17
18	182.84	198	20	75	107	50	5.70		28	75	107	80	9.60		20	3.30		18
19	192.90	209	20	75	107	50	6.10		28	89	127	90	14.00		20	3.60		19
20	202.96	219	20	75	107	50	6.50		28	89	127	90	15.30		20	4.00		20
21	213.03	229	20	75	107	50	7.00		28	89	127	90	16.70		20	4.50		21
22	223.10	240	20	80	117	56	7.90								20	4.90		22
23	233.17	250	20	80	117	56	8.40								20	5.30		23
24	243.25	260	20	80	117	56	8.80		28	95	137	90	21.70		20	5.90		24
25	253.32	270	20	80	117	56	9.30								20	6.50		25
26	263.41	281	20	80	117	56	9.80								20	6.90		26
27	273.49	291	20	80	117	56	10.40								20	7.50		27
28	283.57	301	20	80	117	56	10.90								20	8.10		28
29	293.66	311	20	80	117	56	11.60								20	8.80		29
30	303.75	321	20	80	117	56	12.10		28	95	137	90	32.00		20	9.40		30
31	313.83	331	20	80	117	56	12.80										Rolled Steel	31
32	323.92	341	20	80	117	56	13.40								20	10.70		32
33	334.01	352	20	80	117	56	14.10											33
34	344.10	362	20	89	127	63	14.80								20	12.40		34
35	354.20	372	20	89	127	63	16.60		28	95	137	90	42.20		20	13.00		35
36	364.29	382	20	89	127	63	17.20	Rolled Steel Welded						Rolled Steel Welded	20	13.80		36
37	374.38	392	20	89	127	63	17.90								20	14.50		37
38	384.48	402	20	89	127	63	19.40								20	16.00		38
39	394.57	412	20	89	127	63	19.90											39
40	404.67	422	20	90	127	63	20.40		28	103	147	90	56.00		20	17.50		40
41	414.77	433	20	90	127	63	21.50								20	18.50		41
42	424.86	443	20	90	127	63	22.70								20	19.50		42
43	434.96	453	20	90	127	63	23.50											43
44	445.06	463	20	90	127	63	24.10											44
45	455.15	473	20	90	127	63	24.70		30	103	147	100	70.70		30	22.00		45
48	485.45	503	30	90	127	63	27.50								30	26.00		48
50	505.65	524	30	90	127	63	28.50								30	27.00		50
54	546.05	564	30	103	147	80	37.40								30	31.00		54
60	606.66	625	30	103	147	80	44.30		30	103	147	125	121.00		30	39.00		60
65	657.17	675	30	103	147	80	54.30								30	48.00		65
70	707.68	726	30	103	147	100	62.50								30	52.00		70
75	758.20	777	30	103	147	100	73.50											75

Note: 1. Determine the required bore size less than the Max. value shown above taking strength reduction into consideration.
2. The shaded area of the above table indicates heat treated teeth.

DID 120 standard roller chain

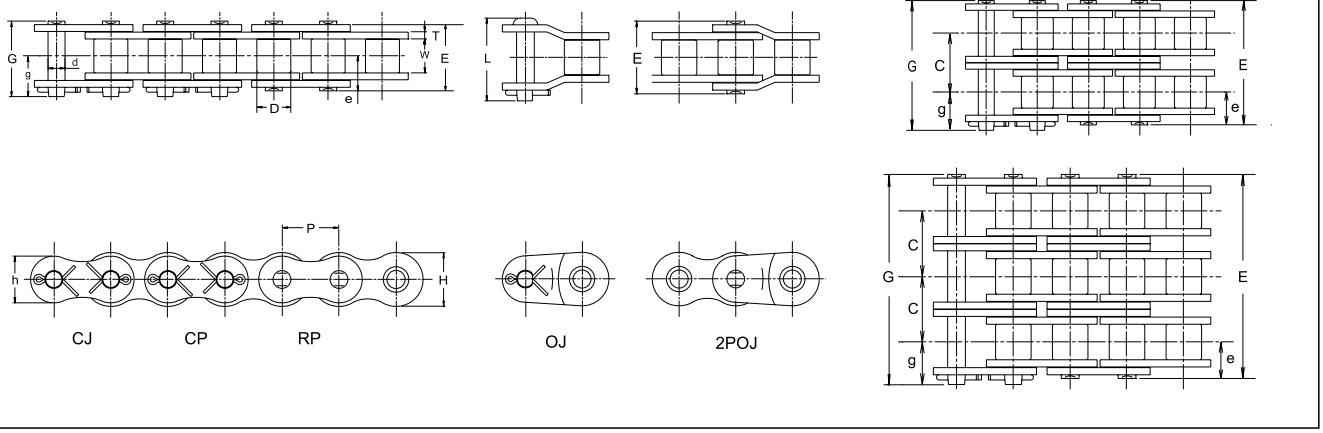

Dimensions

Unit (mm)

Chain No. DID	Chain No. JIS	Pitch P	Roller Link Width W	Roller dia. D	Pin d	Pin E	Pin G	Pin L	Pin e	Pin g	Transverse Pitch C	Plate T	Plate H	Plate h	JIS Min. Tensile Strength kN	JIS Min. Tensile Strength kgf	DID Min. Tensile Strength kN	DID Min. Tensile Strength kgf	DID Avg. Tensile Strength kN	DID Avg. Tensile Strength kgf	DID Max. Allowable Load kN	DID Max. Allowable Load kgf	Approx. Weight (kg/m)
DID120	120					49.7	53.0	54.0							125	12,690	148	15,030	166	16,850	30.4	3,090	5.49
DID120-2	120-2					95.2	98.5	99.6							250	25,380	296	30,050	332	33,710	51.7	5,250	11.0
DID120-3	120-3	38.10	25.40	22.23	11.11	140.6	143.9	145.0	24.9	28.2	45.4	4.80	35.9	31.2	375	38,070	444	45,080	498	50,560	76	7,720	16.5
DID120-4	120-4					186.1	189.4	190.5							—	—	592	60,100	664	67,410	100	10,150	22.0
DID120-5	120-5					231.5	234.8	235.9							—	—	740	75,130	830	84,260	119	12,080	27.5

Note: The values of average tensile strength and Max. allowable tension are for chains.

Max. Kilowatt Ratings DID 120

Unit (kW)

No. of Teeth of Small Sprocket \ Type of Lubrication	Small Sprocket revolutions per minute (rpm) (See P132 for the details of type of lubrication A, B and C.) 10	25	50	100	150	200	300	400	500	600	700	800	900	1000	1100	1200	1300	1400	1500	1600	1700	1800	1900	2000	2100
	A			B									C												
11	1.90	4.33	8.09	15.1	21.8	28.2	40.6	51.2	51.2	43.5	34.5	28.3	23.7	20.2	17.5	15.4	13.7	12.2	11.0	9.99	9.12	8.37	7.72	7.15	6.64
12	2.08	4.76	8.89	16.6	23.9	31.0	44.6	56.3	56.3	49.6	39.4	32.2	27.0	23.1	20.0	17.5	15.6	13.9	12.5	11.4	10.4	9.54	8.80	8.15	—
13	2.27	5.19	9.69	18.1	26.1	33.8	48.6	61.3	61.3	55.9	44.4	36.3	30.4	26.0	22.5	19.8	17.5	15.7	14.2	12.8	11.7	10.8	9.92	9.19	—
14	2.46	5.62	10.5	19.6	28.2	36.6	52.7	66.4	66.4	62.5	49.6	40.6	34.0	29.1	25.2	22.1	19.6	17.5	15.8	14.4	13.1	12.0	11.1	10.3	—
15	2.65	6.06	11.3	21.1	30.4	39.4	56.7	71.6	71.6	69.3	55.0	45.0	37.7	32.2	27.9	24.5	21.7	19.5	17.5	15.9	14.5	13.3	12.3	—	—
16	2.84	6.50	12.1	22.6	32.6	42.2	60.8	76.7	76.7	76.4	60.6	49.6	41.6	35.5	30.8	27.0	23.9	21.4	19.3	17.5	16.0	14.7	13.6	—	—
17	3.04	6.94	13.0	24.2	34.8	45.1	65.0	83.7	83.7	83.6	66.4	54.3	45.5	38.9	33.7	29.6	26.2	23.5	21.2	19.2	17.5	16.1	14.8	—	—
18	3.23	7.38	13.8	25.7	37.0	48.0	69.1	89.5	91.2	91.1	72.3	59.2	49.6	42.4	36.7	32.2	28.6	25.6	23.1	20.9	19.1	17.5	16.2	—	—
19	3.43	7.82	14.6	27.3	39.3	50.9	73.3	94.9	98.9	98.8	78.4	64.2	53.8	45.9	39.8	34.9	31.0	27.7	25.0	22.7	20.7	19.0	—	—	—
20	3.62	8.27	15.4	28.8	41.5	53.8	77.4	100	107	107	84.7	69.3	58.1	49.6	43.0	37.7	33.5	29.9	27.0	24.5	22.4	20.5	—	—	—
21	3.82	8.72	16.3	30.4	43.7	56.7	81.6	106	115	115	91.1	74.6	62.5	53.4	46.3	40.6	36.0	32.2	29.1	26.4	24.1	22.1	—	—	—
22	4.01	9.16	17.1	31.9	46.0	59.6	85.8	111	123	123	97.7	80.0	67.0	57.2	49.6	43.5	38.6	34.5	31.2	28.3	25.8	23.7	—	—	—
23	4.21	9.62	18.0	33.5	48.3	62.5	90.0	117	132	132	104	85.5	71.7	61.2	53.0	46.5	41.3	36.9	33.3	30.2	27.6	—	—	—	—
24	4.41	10.1	18.8	35.1	50.5	65.5	94.3	122	140	140	111	91.1	76.4	65.2	56.5	49.6	44.0	39.4	35.5	32.2	29.4	—	—	—	—
25	4.61	10.5	19.6	36.7	52.8	68.4	98.5	128	146	146	118	96.9	81.2	69.3	60.1	52.7	46.8	41.9	37.7	34.3	31.3	—	—	—	—
28	5.21	11.9	22.2	41.4	59.7	77.3	111	144	165	165	140	115	96.2	82.2	71.2	62.5	55.4	49.6	44.7	40.6	—	—	—	—	—
30	5.61	12.8	23.9	44.6	64.3	83.3	120	155	178	178	156	127	107	91.1	79.0	69.3	61.5	55.0	49.6	—	—	—	—	—	—
32	6.02	13.7	25.6	47.9	68.9	89.3	129	167	191	191	171	140	118	100	87.0	76.4	67.7	60.6	—	—	—	—	—	—	—
35	6.63	15.1	28.3	52.7	75.9	98.4	142	184	211	211	196	160	135	115	99.5	87.4	77.5	—	—	—	—	—	—	—	—
40	7.66	17.5	32.6	60.9	87.7	114	164	212	246	246	240	196	164	140	122	—	—	—	—	—	—	—	—	—	—
45	8.70	19.9	37.1	69.2	99.6	129	186	241	286	286	286	234	196	167	—	—	—	—	—	—	—	—	—	—	—

Note: 1. Values in the table above are for simplex chains only. For multiplex chains, please multiply the coefficient of multi-strand. (See "Chain Selection" on P122).
2. Consult us when the ratings beyond the dotted line to rightward.

DID 120 Standard Sprocket

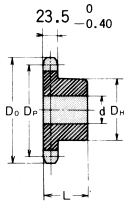

Single sprocket with hub on one side (Single B type)

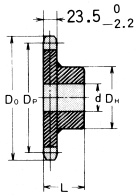

Single sprocket with hub on one side (Single BW type Welded)

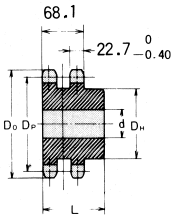

Double sprocket with hub on one side (Double B type)

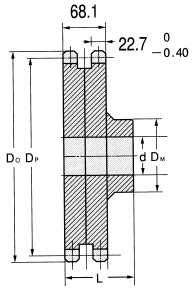

Double sprocket with hub on one side (Double BW type Welded)

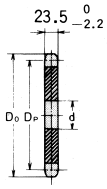

Flat plain (A type)

Unit (mm)

Number of teeth	Pitch dia.	Tip dia.	Single sprocket with hub on one side (B type/ BW type)						Double sprocket with hub on one side (B type/ BW type)						Flat plain (A type)			Number of teeth
			Bore d		Hub		Approx. weight (Kg)	Material	Bore d		Hub		Approx. weight (Kg)	Material	Stock	Approx. weight (Kg)	Material	
	DP	DO	Stock	Max.	(Dia.) DH	(Length) L			Stock	Max.	(Dia.) DH	(Length) L			d			
10	123.29	140	25	50	78	56	3.20	Carbon Steel							25	1.80		10
11	135.23	152	25	60	91	56	4.00								25	2.27		11
12	147.21	165	25	65	98	56	4.80		28	71	103	100	9.20		25	2.60		12
13	159.20	177	25	65	98	56	5.30		28	75	115	100	11.10		25	3.20		13
14	171.22	190	25	70	107	56	6.30		28	80	120	100	11.40		25	3.67		14
15	183.25	202	25	80	117	63	7.80		33	80	120	100	13.20	Carbon Steel	30	4.22		15
16	195.29	214	25	80	117	63	8.40		33	95	140	100	14.40		30	5.00		16
17	207.35	227	25	80	117	63	9.10		33	95	140	100	15.70		30	5.60		17
18	219.41	239	25	80	117	63	9.90		33	100	150	100	18.00		30	6.25		18
19	231.48	251	25	80	117	63	10.70		33	100	150	100	19.40		30	7.00		19
20	243.55	263	25	89	127	63	12.10		33	100	150	100	21.00		30	7.86		20
21	255.63	276	25	89	127	63	13.00		33	100	150	100	22.60		30	8.90		21
22	267.72	288	30	89	127	63	13.40	Rolled Steel Welded						Rolled Steel Welded	30	9.80	Rolled Steel	22
23	279.80	300	30	89	127	63	14.30								30	10.50		23
24	291.90	312	30	89	127	63	15.20		30	110	157	100	36.70		30	11.50		24
25	303.99	324	30	89	127	63	16.20								30	12.56		25
26	316.09	337	30	89	127	63	17.20								30	14.00		26
27	328.19	349	30	89	127	63	18.30								30			27
28	340.29	361	30	95	137	71	21.84								30	16.50		28
30	364.49	385	30	95	137	71	23.20		30	110	157	100	55.90		30	19.00		30
32	388.71	410	30	95	137	71	25.70								30	21.50		32
35	425.04	446	30	95	137	71	29.70		30	110	157	100	75.20		30	26.00		35
36	437.15	458	30	95	137	71	30.70								30	27.50		36
38	461.37	483	30	95	147	80	34.70								30	31.00		38
40	485.60	507	30	103	147	80	38.20		30	125	177	110	101.00		30	34.00		40
42	509.83	531	30	103	147	80	42.00								30	38.00		42
45	546.19	568	30	103	147	80	47.60		30	125	177	110	126.00		30	43.00		45
48	582.54	604	30	103	147	80	53.00								30	49.00		48
50	606.78	628	30	103	147	100	62.87											50
54	655.26	677	30	103	147	100	71.72								30	62.10		54
60	727.99	750	30	118	167	100	75.00		30	125	177	120	223.00		30	76.50		60
65	788.60	811	30	118	167													65
70	849.22	871	30	118	167	112	119.20											70
75	909.84	932	30	118	167	112	134.50											75

Note: 1. Determine the required bore size less than the Max. value shown above taking strength reduction into consideration.
2. The shaded area of the above table indicates heat treated teeth.

DID 140 standard roller chain

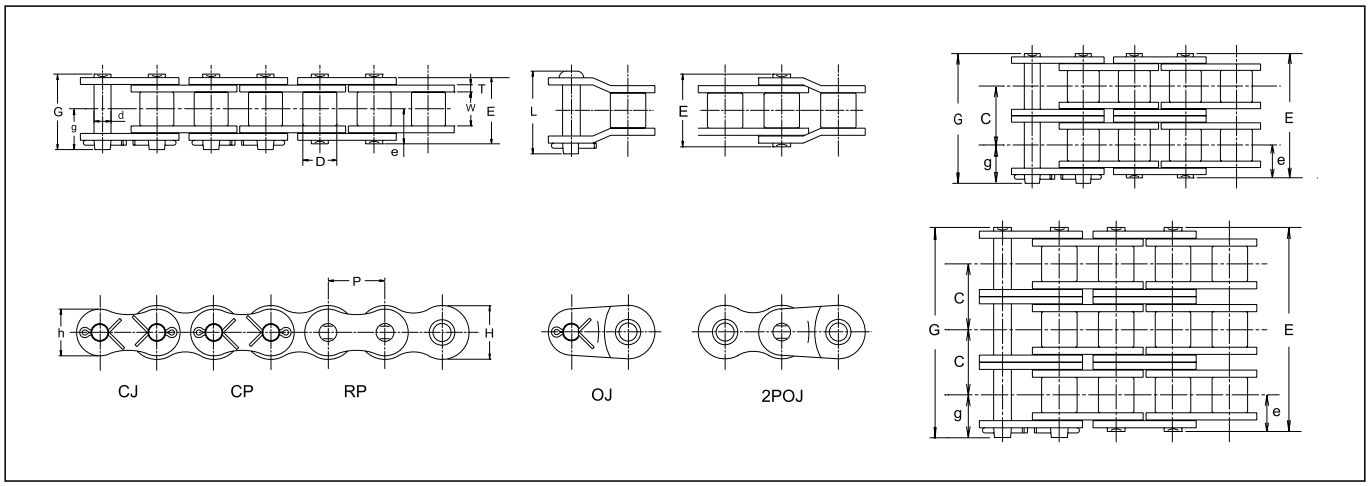

Dimensions

Unit (mm)

Chain No.		Pitch	Roller Link Width	Roller dia.	Pin						Transverse Pitch	Plate			JIS Min. Tensile Strength		DID Min. Tensile Strength		DID Avg. Tensile Strength		DID Max. Allowable Load		Approx. Weight
DID	JIS	P	W	D	d	E	G	L	e	g	C	T	H	h	kN	kgf	kN	kgf	kN	kgf	kN	kgf	(kg/m)
DID140	140					53.6	58.4	59.6							170	17,260	193	19,590	215	21,830	40.2	4,080	7.11
DID140-2	140-2					102.6	107.4	108.6							340	34,520	386	39,190	430	43,650	68.3	6,930	14.1
DID140-3	140-3	44.45	25.40	25.40	12.71	151.5	156.3	157.5	26.8	31.7	48.9	5.60	41.9	36.3	510	51,780	579	58,780	645	65,480	101	10,250	21.1
DID140-4	140-4					200.5	205.3	206.5							—	—	772	78,380	860	87,310	133	13,500	28.1
DID140-5	140-5					249.4	254.2	255.4							—	—	965	97,970	1,075	109,140	157	15,940	34.9

Note: The values of average tensile strength and Max. allowable tension are for chains.

Max. Kilowatt Ratings DID 140

Unit (kW)

No. of Teeth of Small Sprocket \ Type of Lubrication	Small Sprocket revolutions per minute (rpm) (See P132 for the details of type of lubrication A, B and C.)																								
	10	25	50	100	150	200	250	300	350	400	450	500	550	600	700	800	900	1000	1100	1200	1300	1400	1500	1600	1650
	A			B											C										
11	2.93	6.69	12.5	23.3	33.6	43.5	53.2	62.6	72.0	72.7	72.7	64.7	56.1	49.3	39.1	32.0	26.8	22.9	19.8	17.4	15.4	13.8	12.5	11.3	10.8
12	3.22	7.35	13.7	25.6	36.9	47.8	58.4	68.8	79.0	79.9	79.9	73.8	63.9	56.1	44.5	36.4	30.5	26.1	22.6	19.8	17.6	15.7	14.2	12.9	12.3
13	3.51	8.01	15.0	27.9	40.2	52.1	63.7	75.0	86.2	87.1	87.1	83.2	72.1	63.3	50.2	41.1	34.4	29.4	25.5	22.4	19.8	17.8	16.0	14.5	—
14	3.80	8.68	16.2	30.2	43.5	56.4	69.0	81.3	93.4	94.4	94.4	93.0	80.6	70.7	56.1	45.9	38.5	32.9	28.5	25.0	22.2	19.8	17.9	16.2	—
15	4.10	9.35	17.5	32.6	46.9	60.8	74.3	87.6	101	103	103	103	89.4	78.4	62.2	50.9	42.7	36.4	31.6	27.7	24.6	22.0	19.8	5.75	—
16	4.39	10.0	18.7	34.9	50.3	65.2	79.7	93.9	108	114	114	114	98.4	86.4	68.6	56.1	47.0	40.2	34.8	30.5	27.1	24.2	21.9	—	—
17	4.69	10.7	20.0	37.3	53.7	69.6	85.1	100	115	124	124	124	108	94.6	75.1	61.5	51.5	44.0	38.1	33.5	29.7	26.5	23.9	—	—
18	4.99	11.4	21.3	39.7	57.1	74.0	90.5	107	122	136	136	136	117	103	81.8	67.0	56.1	47.9	41.5	36.4	32.3	28.9	26.1	—	—
19	5.29	12.1	22.5	42.0	60.6	78.5	95.9	113	130	144	144	144	127	112	88.7	72.6	60.9	52.0	45.0	39.5	35.1	31.4	28.3	—	—
20	5.59	12.8	23.8	44.4	64.0	82.9	101	119	137	152	152	152	138	121	95.8	78.4	65.7	56.1	48.6	42.7	37.9	33.9	5.68	—	—
21	5.89	13.5	25.1	46.8	67.5	87.4	107	126	145	161	161	161	148	130	103	84.4	70.7	60.4	52.3	45.9	40.7	36.4	—	—	—
22	6.20	14.1	26.4	49.3	71.0	91.9	112	132	152	169	169	169	159	139	111	90.5	75.8	64.7	56.1	49.3	43.7	39.1	—	—	—
23	6.50	14.8	27.7	51.7	74.4	96.4	118	139	160	177	177	177	170	149	118	96.7	81.1	69.2	60.0	52.6	46.7	41.8	—	—	—
24	6.81	15.5	29.0	54.1	77.9	101	123	145	167	186	186	186	181	159	126	103	86.4	73.8	63.9	56.1	49.8	44.2	—	—	—
25	7.11	16.2	30.3	56.6	81.5	106	129	152	175	194	194	194	192	169	134	110	91.9	78.4	68.0	59.7	52.9	15.5	—	—	—
30	8.66	19.8	36.9	68.9	99.2	128	157	185	213	240	253	253	253	222	176	144	121	103	89.4	—	—	—	—	—	—
32	9.29	21.2	39.6	73.8	106	138	168	198	228	257	276	276	276	244	194	159	133	114	98.4	—	—	—	—	—	—
35	10.2	23.4	43.6	81.3	117	152	186	219	251	283	304	304	304	280	222	182	152	130	—	—	—	—	—	—	—
40	11.8	27.0	50.3	94.0	135	175	214	253	290	327	351	351	351	342	271	222	—	—	—	—	—	—	—	—	—
45	13.4	30.6	57.2	107	154	199	243	287	329	372	408	408	408	408	323	—	—	—	—	—	—	—	—	—	—

Note: 1. Values in the table above are for simplex chains only. For multiplex chains, please multiply the coefficient of multi-strand. (See "Chain Selection" on P122).
2. Consult us when the ratings beyond the dotted line to rightward.

DID 140 Standard Sprocket

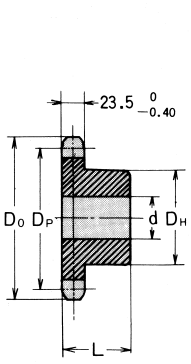

Single sprocket with hub on one side (Single B type)

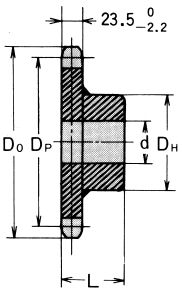

Single sprocket with hub on one side (Single BW type welded)

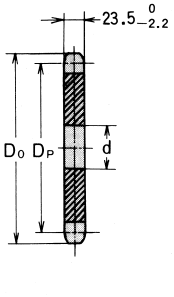

Flat plain (A type)

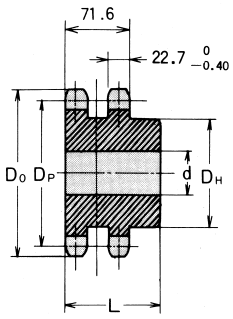

Double sprocket with hub on one side (Double B type)

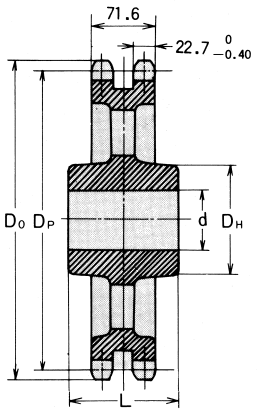

Double sprocket with hub on one side (Double C type)

Unit (mm)

Number of teeth	Pitch dia. DP	Tip dia. DO	Single sprocket with hub on one side (B type/ BW type)						Flat plain (A type)			Number of teeth
			Bore d		Hub		Approx. weight (Kg)	Material	Stock d	Approx. weight (Kg)	Material	
			Stock	Max.	(Dia.) DH	(Length) L						
10	143.84	163	25	60	91	56	4.40	Carbon Steel	25	2.90	Rolled Steel	10
11	157.77	178	25	73	106	56	5.50		25	3.40		11
12	171.74	193	25	80	117	56	6.60		25	4.00		12
13	185.74	207	25	80	117	63	7.90		25	4.70		13
14	199.76	221	25	89	127	63	9.30		25	5.50		14
15	213.79	236	25	89	127	63	10.10	Carbon Steel Rolled Steel Welded	25	6.30		15
16	227.84	250	25	89	127	63	11.00		25	7.20		16
17	241.91	264	25	89	127	63	12.00		25	8.10		17
18	255.98	279	25	89	127	63	13.00		25	9.10		18
19	270.06	293	25	95	137	71	15.60		25	10.30		19
20	284.14	307	25	95	137	71	16.70		25	11.40		20
21	298.24	322	25	95	137	71	17.90		25	12.60		21
22	312.34	336	30	95	137	71	18.40	Rolled Steel Welded	30	13.80		22
23	326.44	350	30	95	137	71	20.50		30	15.10		23
24	340.54	364	30	95	137	71	20.90		30	16.40		24
25	354.65	379	30	103	147	80	24.10		30	17.80		25
26	368.77	393	30	103	147	80	25.50		30	19.20		26
30	425.24	450	30	103	147	80	31.50		30	25.50		30
32	453.49	478	30	110	157	90	36.60		30	29.00		32
35	495.88	521	30	110	157	90	42.90		30	34.60		35
38	538.27	563	30	110	157	90	51.00		30	41.00		38
40	566.54	591	30	110	157	90	53.10		30	45.40		40
42	594.81	620	30	110	157	90	59.50		30	50.00		42
45	637.22	662	30	118	167	100	67.60		30	57.30		45
48	679.63	705	30	118	167	100	77.70		30	65.20		48
60	849.32	875	38	118	167	112	118.00		30	104.00		60

Note: 1. Determine the required bore size less than the Max. value shown above taking strength reduction into consideration.
2. DID's finishing process is the basic application to the bore surface finishing for doubled sprockets of B type and C type.
3. For double C type sprockets, three or four types of bore size are available in 26 and larger number of teeth than that. The bigger standard bore is applied in case the required bore size ranges between the two types of bore size.
4. Heat treatment on teeth portion is available when requested.

Unit (mm)

Double sprocket with hub on one side (B type), Both Sides (C type)								
Type	Number of teeth	Pitch dia. DP	Tip dia. DO	Bore d		Hub		Approx. weight (Kg)	Material
				Min.	Max.	(Dia.) DH	(Length) L		
B	13	185.74	207	28	85	137	110	16.7	Carbon steel or cast steel
	14	199.76	221	28	85	137	110	18.9	
	15	213.79	236	28	90	147	120	23.3	
	16	227.84	250	28	90	147	120	25.8	
	17	241.91	264	28	90	147	125	29.2	
	18	255.98	279	28	100	157	125	33.0	
	19	270.06	293	28	100	157	125	36.4	
	20	284.14	307	28	100	157	125	39.6	
	21	298.24	322	28	100	157	125	43.1	
C	22	312.34	336	32	100	167	125	47.4	
	24	340.54	364	32	100	167	125	55.0	
	26	368.77	393	32	100	167	125	63.5	
	30	425.24	450	32	110	177	130	84.4	
	32	453.49	478	32	110	177	130	95.0	
	35	495.88	521	32	110	177	130	112.0	
	38	538.27	563	32	110	177	130		
	40	566.54	591	32	120	187	135	145.0	
	45	637.22	662	32	120	187	135	183.0	
	50	707.91	733	32	120	187	135	221.0	
	55	778.61	804	32	120	187	135		
	60	849.32	875	32	120	187	135	317.0	

DID 160 standard roller chain

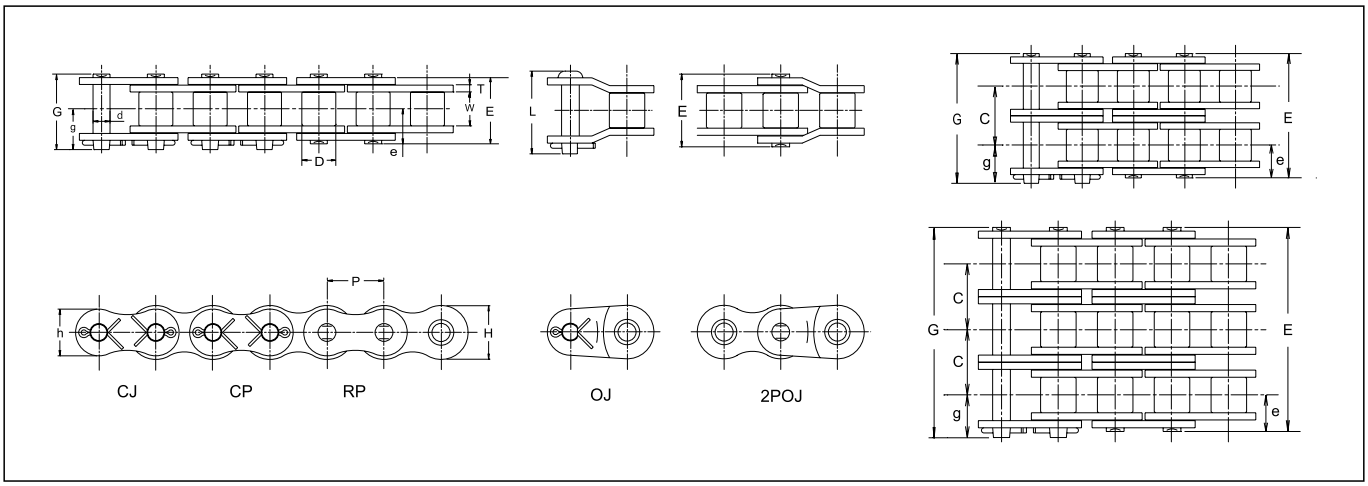

Dimensions

Unit (mm)

Chain No.		Pitch	Roller Link Width	Roller dia.	Pin						Transverse Pitch	Plate			JIS Min. Tensile Strength		DID Min. Tensile Strength		DID Avg. Tensile Strength		DID Max. Allowable Load		Approx. Weight
DID	JIS	P	W	D	d	E	G	L	e	g	C	T	H	h	kN	kgf	kN	kgf	kN	kgf	kN	kgf	(kg/m)
DID160	160					63.6	68.2	69.7							223	22,640	245	24,870	269	27,310	52.9	5,370	9.82
DID160-2	160-2					122.2	126.8	128.3							446	45,280	490	49,750	538	54,620	89.9	9,130	19.4
DID160-3	160-3	50.80	31.75	28.58	14.29	180.8	185.4	186.9	31.9	36.5	58.5	6.40	47.8	41.4	669	67,920	735	74,620	807	81,930	132	13,400	29.0
DID160-4	160-4					239.3	243.8	245.4							—	—	980	99,490	1,076	109,240	175	17,770	38.6
DID160-5	160-5					297.8	303.4	303.9							—	—	1,225	124,370	1,345	136,550	206	20,910	48.2

Note: The values of average tensile strength and Max. allowable tension are for chains.

Max. Kilowatt Ratings DID 160

Unit (kW)

No. of Teeth of Small Sprocket \ Type of Lubrication	Small Sprocket revolutions per minute (rpm) (See P132 for the details of type of lubrication A, B and C.)																								
	10	25	50	100	150	200	250	300	350	400	450	500	550	600	650	700	750	800	850	900	1000	1100	1200	1300
	A			B										C										
11	4.41	10.1	18.8	35.0	50.5	65.4	79.9	94.2	98.5	98.5	84.4	72.0	62.4	54.8	48.6	43.5	39.2	35.6	32.5	29.8	25.5	22.1	19.4	17.2
12	4.84	11.1	20.6	38.5	55.4	71.8	87.8	103	108	108	96.1	82.1	71.1	62.4	55.4	49.6	44.7	40.6	37.0	34.0	29.0	25.2	22.1	19.6
13	5.28	12.1	22.5	42.0	60.5	78.3	95.7	113	118	118	108	92.6	80.2	70.4	62.4	55.9	50.4	45.7	41.8	38.3	32.7	28.4	24.9	22.1
14	5.72	13.1	24.4	45.5	65.5	84.8	104	122	128	128	121	103	89.7	78.7	69.8	62.4	56.3	51.1	46.7	42.8	36.6	31.7	27.8	24.7
15	6.16	14.1	26.3	49.0	70.6	91.4	112	132	138	138	134	115	99.4	87.3	77.4	69.3	62.4	56.7	51.8	47.5	40.6	35.2	30.9	14.7
16	6.61	15.1	28.1	52.5	75.7	98.0	120	141	148	148	148	126	110	96.1	85.3	76.3	68.8	62.4	57.0	52.3	44.7	38.7	34.0	—
17	7.05	16.1	30.1	56.1	80.8	105	128	151	162	162	162	138	120	105	93.4	83.6	75.3	68.4	62.4	57.3	48.9	42.4	37.2	—
18	7.50	17.1	32.0	59.6	85.9	111	136	160	177	177	177	151	131	115	102	91.0	82.1	74.5	68.0	62.4	53.3	46.2	40.6	—
19	7.96	18.2	33.9	63.2	91.1	118	144	170	192	192	192	164	142	124	110	98.7	89.0	80.8	73.8	67.7	57.8	50.1	44.0	—
20	8.41	19.2	35.8	66.8	96.3	125	152	180	206	207	207	177	153	134	119	107	96.1	87.3	79.7	73.1	62.4	54.1	47.5	—
21	8.86	20.2	37.8	70.5	101	131	161	189	218	220	220	190	165	145	128	115	103	93.9	85.7	78.7	67.2	58.2	25.9	—
22	9.32	21.3	39.7	74.1	107	138	169	199	229	231	231	204	177	155	137	123	111	101	91.9	84.4	72.0	62.4	—	—
24	10.2	23.4	43.6	81.4	117	152	186	219	251	254	254	232	201	177	157	140	126	115	105	96.1	82.1	71.1	—	—
25	10.7	24.4	45.6	85.0	123	159	194	229	263	266	266	247	214	188	167	149	134	122	111	102	87.3	75.6	—	—
30	13.0	29.7	55.5	104	149	193	236	278	320	330	330	324	281	247	219	196	177	160	146	134	—	—	—	—
32	14.0	31.9	59.5	111	160	207	253	298	343	358	358	357	310	272	241	216	195	177	161	—	—	—	—	—
35	15.4	35.1	65.5	122	176	228	279	329	378	409	409	409	354	311	276	247	223	—	—	—	—	—	—	—
40	17.8	40.6	75.7	141	204	264	322	380	436	467	467	467	433	380	337	—	—	—	—	—	—	—	—	—
45	20.2	46.1	86.0	160	231	299	366	431	495	532	532	532	517	453	—	—	—	—	—	—	—	—	—	—

Note: 1. Values in the table above are for simplex chains only. For multiplex chains, please multiply the coefficient of multi-strand. (See "Chain Selection" on P122).
2. Consult us when the ratings beyond the dotted line to rightward.

DID 160 Standard Sprocket

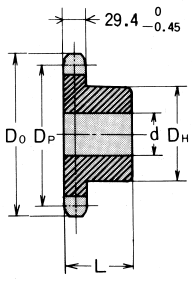

Single sprocket with hub on one side (Single B type)

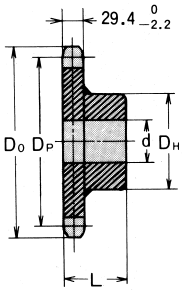

Single sprocket with hub on one side (Single BW type welded)

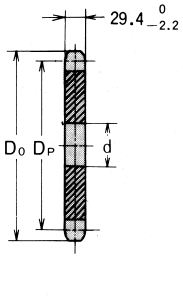

Flat plain (A type)

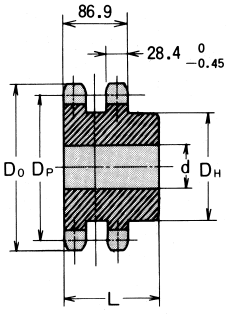

Double sprocket with hub on one side (Double B type)

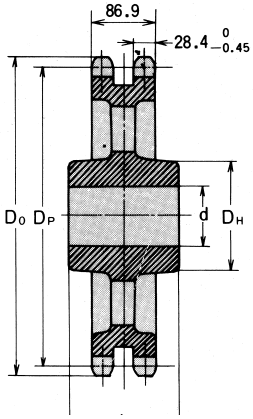

Double sprocket with hub on one side (Double C type)

Unit (mm)

Number of teeth	Pitch dia. DP	Tip dia. Do	Single sprocket with hub on one side (B type/ BW type)						Flat plain (A type)			Number of teeth
			Bore d		Hub		Approx. weight (Kg)	Material	Stock d	Approx. weight (Kg)	Material	
			Stock	Max.	(Dia.) DH	(Length) L						
10	164.39	186	25	70	105	63	6.80	Carbon Steel	25	4.80	Rolled Steel	10
11	180.31	204	25	80	117	63	8.30		25	5.79		11
12	196.28	220	25	89	127	63	9.90		25	6.86		12
13	212.27	237	25	95	137	71	12.50		25	8.03		13
14	228.29	253	25	95	137	71	13.80		25	9.28		14
15	244.33	269	30	95	137	71	15.20	Carbon Steel	30	10.63		15
16	260.39	286	30	103	147	71	17.40		30	12.08		16
17	276.46	302	30	103	147	71	18.90	Rolled Steel Welded	30	13.61		17
18	292.55	319	30	103	147	71	20.60		30	15.23		18
19	308.64	335	30	103	147	71	22.30		30	16.95		19
20	324.74	351	30	103	147	71	24.20		30	18.75		20
21	340.84	368	30	103	147	71	26.10		30	20.65		21
22	356.96	384	35	118	167	80	30.20	Rolled Steel Welded	35	22.64		22
24	389.19	416	35	118	167	80	34.40		35	26.90		24
25	405.32	433	35	118	167	80	36.60		35	29.16		25
26	421.45	449	35	118	167	80	38.90		35	31.52		26
30	485.99	514	35	118	167	100	52.30		35	41.86		30
32	518.28	546	35	118	167	100	59.90		35	47.95		32
35	566.72	595	35	118	167	100	66.90		35	57.24		35
40	647.47	676	35	118	167	112	85.80		35	74.57		40
45	728.25	757	35	132	187	125	114.40		35	94.71		45
48	776.72	806	35	132	187	125			35	107.61		48
60	970.65	1,000	35	132	187	125	187.80		35	168.14		60

Note: 1. Determine the required bore size less than the Max. value shown above taking strength reduction into consideration.
2. DID's finishing process is the basic application to the bore surface finishing for doubled sprockets of B type and C type.
3. For double C type sprockets, three or four types of bore size are available in 26 and larger number of teeth than that. The bigger standard bore is applied in case the required bore size ranges between the two types of bore size.
4. Heat treatment on teeth portion is available when requested.
5. Due to production reasons, Carbon Stell may be used for those with 13 ~ 21 teeth without notice.

Unit (mm)

Double sprocket with hub on one side (B type), Both Sides (C type)									
Type	Number of teeth	Pitch dia. DP	Tip dia. Do	Bore d		Hub		Approx. weight (Kg)	Material
				Min.	Max.	(Dia.) DH	(Length) L		
B	13	212.27	237	45	90	155	120	23.9	Carbon steel or cast steel
	14	228.30	253	45	90	165	120	27.7	
	15	244.33	269	45	100	180	120	32.3	
	16	260.39	286	50	105	195	140	41.5	
	17	276.46	302	60	120	210	150	49.3	
	18	292.55	319	60	130	225	160	59.2	
	19	308.64	335	65	140	240	170	69.8	
	20	324.74	351	65	150	260	180	84.2	
	21	340.84	368	65	150	260	180	89.8	
C	22	356.95	384	65	150	260	180	95.7	
	24	389.19	416	65	150	260	180	108.0	
	26	421.45	449	85	110	180	130	141.0	
	30	485.99	514					121.0	
	32	518.28	546	110	145	225	170	128.0	
	35	566.71	595					138.0	
	38	615.17	644	145	175	270	200	150.0	
	40	647.47	676					157.0	
	45	728.25	757	85	110	180	130	214.0	
	50	809.04	838					238.0	
	55	889.84	919					264.0	
	60	970.65	1,000	110	145	225	170	293.0	
	65	1,051.47	1,081					322.0	
	70	1,132.29	1,162	145	180	270	200	352.0	
	75	1,213.11	1,243	180	225	340	235	386.0	
	80	1,293.94	1,323					420.0	
	90	1,455.61	1,485					502.0	

DID 180 standard roller chain

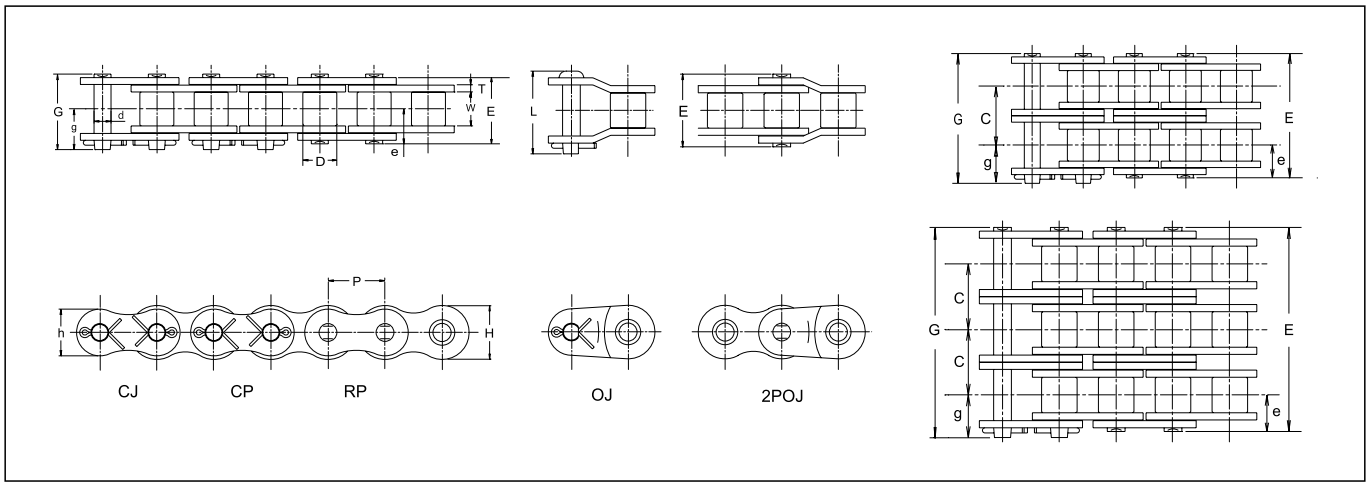

Dimensions

Unit (mm)

Chain No.		Pitch	Roller Link Width	Roller dia.	Pin						Transverse Pitch	Plate			JIS Min. Tensile Strength		DID Min. Tensile Strength		DID Avg. Tensile Strength		DID Max. Allowable Load		Approx. Weight
DID	JIS	P	W	D	d	E	G	L	e	g	C	T	H	h	kN	kgf	kN	kgf	kN	kgf	kN	kgf	(kg/m)
DID180	180					71.5	77.3	79.3							281	28,530	333	33,810	362	36,750	61.7	6,260	12.7
DID180-2	180-2					137.4	143.2	145.2							562	57,060	666	67,610	724	73,500	105	10,660	25.0
DID180-3	180-3	57.15	35.72	35.71	17.46	203.3	209.1	211.1	35.8	41.6	65.8	7.10	53.8	46.6	843	85,580	999	101,420	1,086	110,250	154	15,630	37.3
DID180-4	180-4					269.1	274.9	276.9							—	—	1,332	135,230	1,448	147,010	204	20,710	49.6
DID180-5	180-5					334.9	340.7	342.7							—	—	1,665	169,040	1,810	183,760	241	24,470	61.9

Note: The values of average tensile strength and Max. allowable tension are for chains.

Max. Kilowatt Ratings DID 180

Unit (kW)

Type of Lubrication / No. of Teeth of Small Sprocket	Small Sprocket revolutions per minute (rpm) (See P132 for the details of type of lubrication A, B and C.)																								
	10	25	50	100	150	200	250	300	350	400	450	500	550	600	650	700	750	800	850	900	950	1000	1050	1100
	A		B							C														
13	6.93	15.8	29.5	55.1	79.3	103	126	142	142	142	119	102	88.2	77.4	68.6	61.4	55.4	50.3	45.9	42.1	38.8	36.0	33.4	15.0
14	7.51	17.1	32.0	59.7	85.9	111	136	159	159	159	133	114	98.5	86.5	76.7	68.6	61.9	56.2	51.3	47.1	43.4	40.2	37.3	—
15	8.09	18.5	34.4	64.3	92.6	120	147	173	176	176	148	126	109	95.9	85.0	76.1	68.6	62.3	56.9	52.2	48.1	44.6	41.4	—
16	8.67	19.8	36.9	68.9	99.3	129	157	185	191	191	163	139	120	106	93.7	83.8	75.6	68.6	62.6	57.5	53.0	49.1	38.3	—
17	9.26	21.1	39.4	73.6	106	137	168	198	201	201	178	152	132	116	103	91.8	82.8	75.1	68.6	63.0	58.1	53.8	9.66	—
18	9.85	22.5	41.9	78.3	113	146	179	210	216	216	194	166	144	126	112	100	90.2	81.9	74.8	68.6	63.3	58.6	—	—
19	10.4	23.8	44.5	83.0	120	155	189	223	229	229	210	180	156	137	121	108	97.8	88.8	81.1	74.4	68.6	63.5	—	—
20	11.0	25.2	47.0	87.7	126	164	200	236	243	243	227	194	168	148	131	117	106	95.9	87.6	80.4	74.1	38.4	—	—
21	11.6	26.5	49.5	92.4	133	173	211	248	256	256	245	209	181	159	141	126	114	103	94.2	86.5	79.7	—	—	—
22	12.2	27.9	52.1	97.2	140	181	222	261	269	269	262	224	194	170	151	135	122	111	101	92.7	85.5	—	—	—
24	13.4	30.7	57.2	107	154	199	244	287	299	299	299	255	221	194	172	154	139	126	115	—	—	—	—	—
26	14.7	33.4	62.4	116	168	217	266	313	339	339	337	288	249	219	194	174	—	—	—	—	—	—	—	—
30	17.1	39.0	72.8	136	196	254	310	365	402	402	402	357	309	271	241	—	—	—	—	—	—	—	—	—
35	20.2	46.1	86.0	160	231	300	366	431	478	478	478	449	389	—	—	—	—	—	—	—	—	—	—	—
40	23.3	53.2	99.4	185	267	346	423	498	559	559	559	549	—	—	—	—	—	—	—	—	—	—	—	—
45	26.5	60.5	113	211	303	393	480	566	635	635	635	—	—	—	—	—	—	—	—	—	—	—	—	—

Note: 1. Values in the above table are for simplex chain only. For multiplex chains, please multiply the coefficient of multi-strand. (See "Chain Selection" on P122).
2. Consult us when the ratings beyond the dotted line to rightward.

DID 180 Standard Sprocket

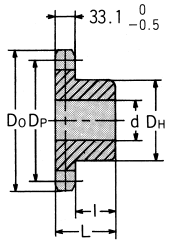

Single sprocket with hub on one side (Single B type)

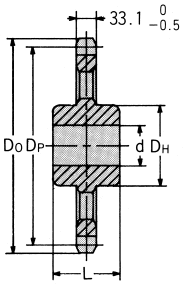

Single sprocket with hub on one side (Single BW type welded)

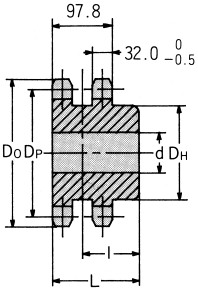

Double sprocket with hub on one side (Double B type)

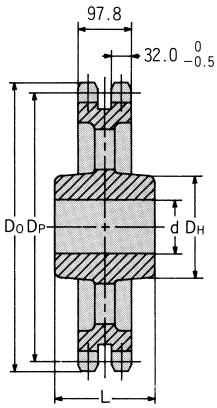

Double sprocket with hub on one side (Double C type)

Unit (mm)

Single sprocket with hub on one side (B type), Both Sides (C type)									
Type	Number of teeth	Pitch dia. DP	Tip dia. DO	Bore d		Hub		Center position l	Material
				Min.	Max.	(Dia.) DH	(Length) L		
B	13	238.81	266	43	95	147	75	93.45	carbon steel or cast steel
	14	256.83	285	43	105	167	80	93.45	
	15	274.88	303	43	110	177	80	93.45	
	16	292.94	322	43	110	177	80	113.45	
	17	311.02	340	43	115	177	80	113.45	
	18	329.11	358	43	115	177	80	113.45	
	19	347.22	377	43	115	177	80	113.45	
	20	365.33	395	43	115	177	80	113.45	
C	21	383.45	413	63	120	187	85		Carbon steel or cast steel
	22	401.57	432	63	120	187	85		
	24	437.84	468	63	125	197	90		
	26	474.13	505	63	125	197	90		
	30	546.74	578	63	125	217	110		
	35	637.56	669	63	135	217	110		
	40	728.41	760	63	150	237	125		
	45	819.28	852	63	150	237	125		
	60	1,091.98	1,125	63	150	237	125		

Note: 1. Determine the required bore size less than the Max. value shown above taking strength reduction into consideration.
2. Given dimensions of bore and DH and L of hub to those with 21 teeth and larger is reference. Please consult with us about them when ordering.
3. DID's finishing process is the basic application to the bore surface finishing for double sprockets of B Type and C type.
4. For double C type sprockets, three or four types of bore size are available in 26 and larger number of teeth than that. The bigger standard bore is applied in case the required bore size ranges between the two types of bore size.
5. Heat treatment on teeth portion is available when requested.

Unit (mm)

Double sprocket with hub on one side (B type), Both Sides (C type)									
Type	Number of teeth	Pitch dia. DP	Tip dia. DO	Bore d		Hub		Center position l	Material
				Min.	Max.	(Dia.) DH	(Length) L		
B	13	238.81	266	60	100	170	130	81.1	Carbon steel or cast steel
	14	256.83	285	60	110	190	140	91.1	
	15	274.87	303	60	120	210	150	101.1	
	16	292.94	322	60	130	225	160	111.1	
	17	311.02	340	65	140	245	170	121.1	
	18	329.12	358	65	150	265	180	131.1	
	19	347.21	377	70	170	280	190	141.1	
	20	365.33	395	70	185	300	200	151.1	
C	21	383.45	413	70	185	300	200		
	22	401.58	432	70	185	300	200		
	24	437.84	468	70	185	300	200		
	26	474.13	505						
	30	546.74	578						
	32	583.06	615						
	35	637.55	669						
	38	692.06	724						
	40	728.41	760						
	45	819.28	852	110	145	225	170		
	50	910.17	943	145	180	270	200		
	55	1,001.07	1,034	180	225	340	235		
	60	1,091.98	1,125						
	65	1,182.90	1,216						
	70	1,273.83	1,307						
	75	1,364.75	1,398						
	80	1,455.69	1,489						
	90	1,637.56	1,671						

DID 200 standard roller chain

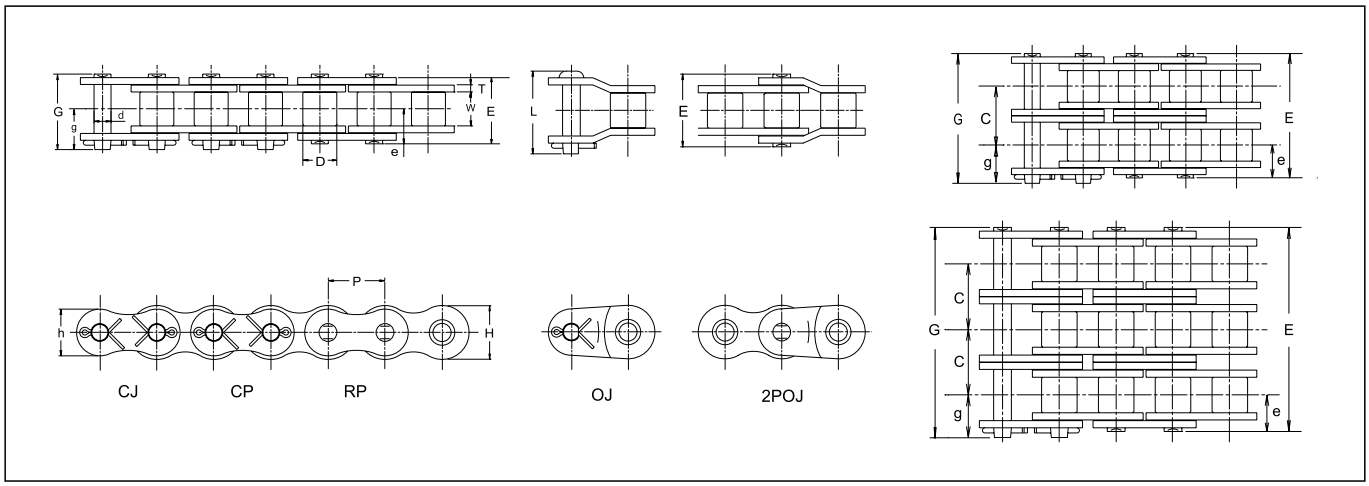

Dimensions

Unit (mm)

Chain No.		Pitch	Roller Link Width	Roller dia.	Pin						Transverse Pitch	Plate			JIS Min. Tensile Strength		DID Min. Tensile Strength		DID Avg. Tensile Strength		DID Max. Allowable Load		Approx. Weight
DID	JIS	P	W	D	d	E	G	L	e	g	C	T	H	h	kN	kgf	kN	kgf	kN	kgf	kN	kgf	(kg/m)
DID200	200					77.9	85.0	87.3							347	35,230	431	43,760	470	47,720	73.5	7,460	16.5
DID200-2	200-2					149.6	156.6	159.0							694	70,460	863	87,610	940	95,430	125	12,690	32.5
DID200-3	200-3	63.50	38.10	39.68	19.85	221.3	228.3	230.6	39.0	46.0	71.6	8.00	60.0	52.0	1,041	105,690	1,294	131,370	1,410	143,150	184	18,680	48.5
DID200-4	200-4					292.9	299.9	302.2							—	—	1,725	175,130	1,880	190,860	243	24,670	64.5
DID200-5	200-5					364.5	371.5	373.8							—	—	2,157	218,980	2,350	238,580	287	29,140	80.5

Note: The values of average tensile strength and Max. allowable tension are for chains.

Max. Kilowatt Ratings DID 200

Unit (kW)

Type of Lubrication / No. of Teeth of Small Sprocket	Small Sprocket revolutions per minute (rpm) (See P132 for the details of type of lubrication A, B and C.)																							
	10	15	20	30	40	50	60	80	100	150	200	250	300	350	400	450	550	600	650	700	750	800	850	900
	A				B									C										
13	9.60	13.8	17.9	25.8	33.5	40.9	48.2	62.4	76.3	110	142	172	172	172	155	130	95.9	84.2	74.6	66.8	60.2	54.7	49.9	45.8
14	10.4	15.0	19.4	28.0	36.2	44.3	52.2	67.6	82.7	119	154	187	187	187	173	145	107	94.1	83.4	74.6	67.3	61.1	55.8	30.2
15	11.2	16.2	20.9	30.1	39.0	47.7	56.2	72.9	89.1	128	166	201	201	201	192	161	119	104	92.5	82.8	74.6	67.8	61.9	1.57
16	12.0	17.3	22.4	32.3	41.9	51.2	60.3	78.1	95.5	138	178	216	216	216	211	177	131	115	102	91.2	82.2	74.6	68.2	—
17	12.8	18.5	24.0	34.5	44.7	54.6	64.4	83.4	102	147	190	231	231	231	231	194	143	126	112	99.9	90.1	81.8	74.6	—
18	13.7	19.7	25.5	36.7	47.5	58.1	68.5	88.7	108	156	202	247	252	252	252	211	156	137	122	109	98.1	89.1	53.1	—
19	14.5	20.8	27.0	38.9	50.4	61.6	72.6	94.1	115	166	215	262	273	273	273	229	169	149	132	118	106	96.6	—	—
20	15.3	22.0	28.5	41.1	53.3	65.1	76.7	99.4	122	175	227	277	293	293	293	247	183	161	142	127	115	—	—	—
21	16.1	23.2	30.1	43.3	56.2	68.6	80.9	105	128	185	239	292	317	317	317	266	197	173	153	137	—	—	—	—
22	17.0	24.4	31.6	45.6	59.0	72.2	85.1	110	135	194	251	307	340	340	340	285	211	185	164	147	—	—	—	—
24	18.6	26.8	34.8	50.1	64.9	79.3	93.4	121	148	213	276	338	377	377	377	325	241	211	187	—	—	—	—	—
26	20.3	29.3	37.9	54.6	70.7	86.5	102	132	161	232	301	368	408	408	408	367	271	238	—	—	—	—	—	—

Note: 1. Value in the above table is for simplex chain only. For multiplex chains, please apply the coefficient of Multi-strand. (Please refer to Chain selection on P.122).
2. Consult us when the ratings beyond the dotted line to rightward.

DID 200 Standard Sprocket

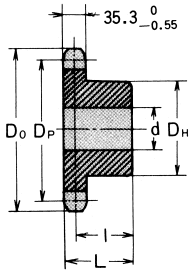

Single sprocket with hub on one side (Single B type)

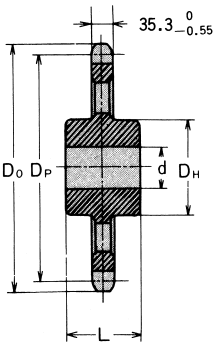

Single sprocket with hub on one side (Single BW type welded)

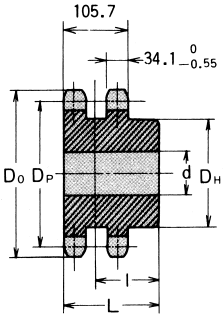

Double sprocket with hub on one side (Double B type)

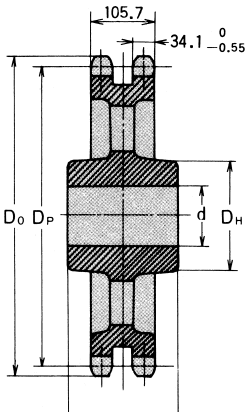

Double sprocket with hub on one side (Double C type)

Unit (mm)

Single sprocket with hub on one side (B type), Both Sides (C type)

Type	Number of teeth	Pitch dia. DP	Tip dia. DO	Bore d		Hub		Center position l	Approx. weight (Kg)	Material
				Min.	Max.	(Dia.) DH	(Length) L			
B	13	265.34	296	43	100	167	80	102.40	22.4	Carbon steel or cast steel
	14	285.37	316	43	110	177	80	102.40	25.7	
	15	305.42	337	43	115	177	80	102.40	28.3	
	16	325.49	357	43	115	177	80	122.40	30.3	
	17	345.58	378	43	120	187	85	122.40	35.3	
	18	365.68	398	43	120	187	85	122.40	38.4	
	19	385.80	419	63	125	197	90	122.40	42.9	
	20	405.92	439	63	125	197	90	122.40	46.4	
C	21	426.05	459	63	135	217	110		59.1	
	22	446.19	480	63	135	217	110		62.2	
	24	486.49	520	63	140	227	110		73.1	
	26	526.81	561	63	140	227	110		82.0	
	30	607.49	642	63	150	237	125		109.1	
	35	708.39	744	63	150	237	125		138.0	
	40	809.34	845	63	170	267	140		186.1	
	45	910.31	946	63	170	267	140		223.9	
	60	1,213.31	1,250	68	170	267	140		363.2	

Note: 1. Determine the required bore size less than the Max. value shown above taking strength reduction into consideration.
2. DID's finishing process is the basic application to the bore surface finishing for double sprockets of B type and C type.
3. For double C type sprockets, three or four types of bore size are available in 26 and larger number of teeth than that. The bigger standard bore is applied in case the required bore size ranges between the two types of bore size.

Double sprocket with hub on one side (B type), Both Sides (C type)

Type	Number of teeth	Pitch dia. DP	Tip dia. DO	Bore d		Hub		Center position l	Approx. weight (Kg)	Material
				Min.	Max.	(Dia.) DH	(Length) L			
B	13	265.34	296	60	105	190	140	87.15	43.0	Carbon steel or cast steel
	14	285.37	316	60	115	205	150	97.15	52.6	
	15	305.42	337	60	130	225	160	107.15	64.9	
	16	325.49	357	70	145	245	170	117.15	77.8	
	17	345.58	378	70	160	265	190	137.15	98.0	
	18	365.68	398	70	175	285	200	147.15	117	
	19	385.79	419	70	190	305	210	157.15	133	
	20	405.92	439	70	190	305	210	157.15	149	
	21	426.05	459	70	190	305	210	157.15	159	
C	22	446.20	480	70	190	305	210		171	
	24	486.49	520	70	190	305	210		181	
	26	526.81	561						201	
	30	607.49	642						224	
	32	647.85	683						237	
	35	708.39	744						256	
	38	768.96	804						284	
	40	809.34	845						296	
	45	910.31	946	110	145	225	170		336	
	50	1,011.30	1,047	145	180	270	200		380	
	55	1,112.30	1,149	180	225	340	235		422	
	60	1,213.31	1,250						473	
	65	1,314.34	1,351						528	
	70	1,415.36	1,452						582	
	75	1,516.39	1,553						643	
	80	1,617.43	1,654						704	
	90	1,819.51	1,856						839	

DID 240 standard roller chain

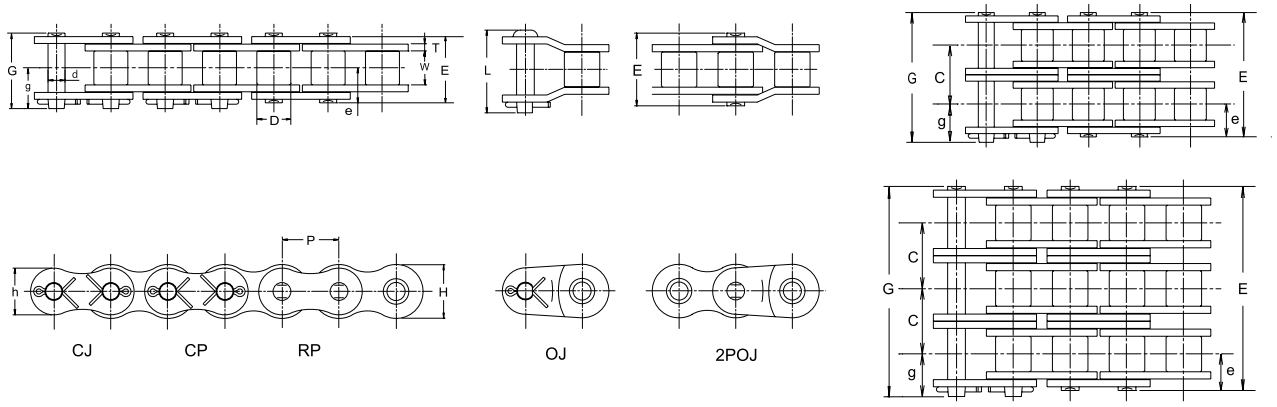

Dimensions

Unit (mm)

Chain No.		Pitch	Roller Link Width	Roller dia.	Pin						Transverse Pitch	Plate			JIS Min. Tensile Strength		DID Min. Tensile Strength		DID Avg. Tensile Strength		DID Max. Allowable Load		Approx. Weight (kg/m)
DID	JIS	P	W	D	d	E	G	L	e	g	C	T	H	h	kN	kgf	kN	kgf	kN	kgf	kN	kgf	
DID240	240					95.2	102.9	105.4							500	50,760	623	63,250	686	69,640	99	10,050	23.3
DID240-2	240-2					183.1	190.7	193.3							1,000	101,520	1,246	126,500	1,372	139,290	168	17,060	46.0
DID240-3	240-3	76.20	47.63	47.63	23.81	270.9	278.5	281.1	47.7	55.3	87.8	9.50	71.5	62.0	1,500	152,280	1,869	189,750	2,058	208,930	248	25,180	68.7
DID240-4	240-4					358.7	366.4	368.9							—	—	2,492	252,990	2,744	278,580	327	33,200	91.3
DID240-5	240-5					446.5	454.2	456.7							—	—	3,115	316,240	3,430	348,220	386	39,190	114

Note: The values of average tensile strength and Max. allowable tension are for chains.

Max. Kilowatt Ratings DID 240

Unit (kW)

No. of Teeth of Small Sprocket \ Type of Lubrication	Small Sprocket revolutions per minute (rpm) (See P132 for the details of type of lubrication A, B and C.)																							
	5	10	15	20	25	30	40	50	60	80	100	125	150	175	200	250	300	350	400	450	500	550	600	650
	A				**B**											**C**								
13	7.78	14.5	20.9	27.1	33.1	39.1	50.6	61.9	72.9	94.4	115	141	166	191	215	242	242	219	179	150	128	111	97.4	15.7
14	8.43	15.7	22.7	29.4	35.9	42.3	54.8	67.0	79.0	102	125	153	180	207	233	263	263	244	200	168	143	124	109	—
15	9.08	17.0	24.4	31.7	38.7	45.6	59.1	72.2	85.1	110	135	165	194	223	251	283	283	271	222	186	159	138	121	—
16	9.74	18.2	26.2	33.9	41.5	48.9	63.3	77.4	91.2	118	144	177	208	239	270	302	302	298	244	205	175	152	130	—
17	10.4	19.4	28.0	36.2	44.3	52.2	67.6	82.6	97.4	126	154	189	222	255	288	327	327	327	268	224	191	166	101	—
18	11.1	20.7	29.7	38.5	47.1	55.5	71.9	87.9	104	134	164	201	236	271	306	356	356	356	291	244	209	181	72.6	—
19	11.7	21.9	31.5	40.9	49.9	58.8	76.2	93.2	110	142	174	213	251	288	325	386	386	386	316	265	226	196	44.0	—
20	12.4	23.1	33.3	43.2	52.8	62.2	80.6	98.5	116	150	184	225	265	304	343	417	417	417	341	286	244	212	15.3	—
21	13.1	24.4	35.1	45.5	55.6	65.6	84.9	104	122	159	194	237	279	321	362	442	449	449	367	308	263	204	—	—
22	13.7	25.7	36.9	47.9	58.5	68.9	89.3	109	129	167	204	249	293	337	380	465	481	481	394	330	282	176	—	—
24	15.1	28.2	40.6	52.6	64.3	75.7	98.1	120	141	183	224	274	322	370	418	511	538	538	449	376	321	—	—	—
26	16.5	30.7	44.3	57.3	70.1	82.6	107	131	154	200	244	298	352	404	455	557	582	582	506	424	299	—	—	—

Note: 1. Values in the above table are for simplex chain only. For multiplex chains, please multiply the coefficient of multi-strand. (See "Chain Selection" on P122).
2. Consult us when the ratings beyond the dotted line to rightward.

DID 240 Standard Sprocket

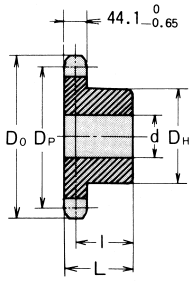

Single sprocket with hub on one side (Single B type)

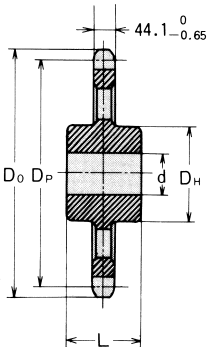

Single sprocket with hub on one side (Single BW type welded)

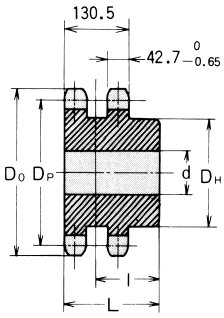

Double sprocket with hub on one side (Double B type)

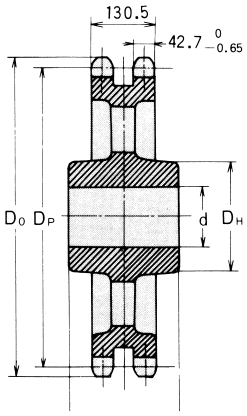

Double sprocket with hub on one side (Double C type)

Unit (mm)

Single sprocket with hub on one side (B type), Both Sides (C type)

Type	Number of teeth	Pitch dia. DP	Tip dia. DO	Bore d		Hub		Center position l	Approx. weight (Kg)	Material
				Min.	Max.	(Dia.) DH	(Length) L			
B	13	318.41	355	50	120	197	100	127.95	39.2	Carbon steel or cast steel
	14	342.44	380	50	130	207	110	127.95	47.4	
	15	366.50	404	63	140	227	110	127.95	54.2	
	16	390.59	429	63	140	227	110	147.95	59.1	
	17	414.69	453	63	145	227	110	147.95	64.4	
	18	438.82	478	63	145	227	110	147.95	71.1	
	19	462.96	502	63	150	237	120	147.95	82.2	
	20	487.10	527	63	150	237	120	147.95	88.5	
C	21	511.26	551	63	155	237	120		95.0	
	22	535.43	576	63	155	237	120		101.9	
	24	583.79	625	63	160	257	140		129.2	
	26	632.17	673	63	160	257	140		145.2	
	30	728.99	771	63	165	257	140		181.0	
	35	850.07	892	63	165	257	140		233.0	
	40	971.21	1,014	90	170	267	140		295.5	
	45	1,092.37	1,135	90	170	267	140		363.5	
	60	1,455.98	1,500	100	170	267	140		615.4	

Note: 1. Determine the required bore size less than the Max. value shown above taking strength reduction into consideration.
2. DID's finishing process is the basic application to the bore surface finishing for double sprockets of B type and C type.
3. For double C type sprockets, three or four types of bore size are available in 26 and larger number of teeth than that. The bigger standard bore is applied in case the required bore size ranges between the two types of bore size.

Unit (mm)

Double sprocket with hub on one side (B type), Both Sides (C type)

Type	Number of teeth	Pitch dia. DP	Tip dia. DO	Bore d		Hub		Center position l	Approx. weight (Kg)	Material
				Min.	Max.	(Dia.) DH	(Length) L			
B	13	318.41	355	70	130	225	170	104.75	75.3	Carbon steel or cast steel
	14	342.44	380	70	145	250	170	104.75	89.9	
	15	366.50	404	70	160	270	190	124.75	113	
	16	390.59	429	70	175	290	200	134.75	135	
	17	414.70	453	70	190	310	210	144.75	159	
	18	438.82	478	70	210	340	210	144.75	185	
	19	462.95	502	70	210	340	210	144.75	201	
	20	487.11	527	70	210	340	210	144.75	220	
	21	511.26	551	70	210	340	210	144.75	238	
C	22	535.43	576	70	210	340	210		260	
	24	583.79	625						255	
	26	632.17	673						265	
	30	728.99	771						322	
	32	777.42	819						352	
	35	850.07	892						390	
	38	922.75	965						432	
	40	971.21	1,014	110	145	225	170		462	
	45	1,092.37	1,135	145	180	270	200		534	
	50	1,213.56	1,257	180	225	340	235		624	
	55	1,334.76	1,378						715	
	60	1,455.98	1,500						806	
	65	1,577.20	1,621						911	
	70	1,698.44	1,742						1,030	
	75	1,819.67	1,864						1,130	
	80	1,940.91	1,985						1,260	
	90	2,183.41	2,228						1,550	

Strong chains suitable for use in various conditions

	HI-PWR-S Roller Chain	HK Roller Chain
Name		
Features	①Higher fatigue strength and shock strength are provided without changing dimensions from standard roller chain ②Oval figured link-plates are provided	①Thickness of inner and outer plates are the same as the link-plates of the next size larger standard chain ②Allows the selection of a chain one size smaller than would be necessary
Functions	Allowable Load 130% / Tensile strength index 110% / Temperature Range in Use -10℃~80℃	Allowable Load 115% / Tensile strength index 120% / Temperature Range in Use -10℃~80℃
Main uses	CONST-RUCTION / AGRICULTURE / OUTDOOR	PETROLIUM / CONST-RUCTION / FORESTRY / MACHINE / AGRICULTURE

■ Table of Ultimate Power Chain Series

Chain No.	HI-PWR-S	HK	HI-PWR-SHK
DID 50	-	HK	-
DID 60	-	HK	-
DID 80	HI-PWR-S	HK	HI-PWR-SHK
DID 100	HI-PWR-S	HK	HI-PWR-SHK
DID 120	HI-PWR-S	HK	HI-PWR-SHK
DID 140	HI-PWR-S	HK	HI-PWR-SHK
DID 160	HI-PWR-S	HK	HI-PWR-SHK
DID 180	HI-PWR-S	HK	HI-PWR-SHK
DID 200	HI-PWR-S	HK	HI-PWR-SHK
DID 240	HI-PWR-S	HK	HI-PWR-SHK

HI-PWR-SHK Roller Chain

Name



Features

①Both thicker link plates and oval figured link plates are provided
②Thus it makes it possible to have maximum tensile strength and allowable load

Functions

Allowable Load 150%　Tensile strength index 125%　Temperature Range in Use -10℃～80℃

Main uses

CONST-RUCTION　EXCAVATION　MINING

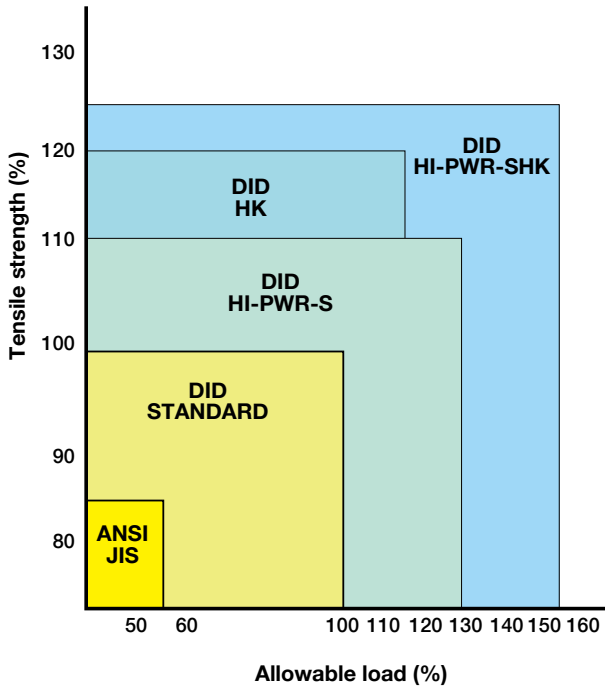

■ Symbols

Functions

Allowable Load 130% — Allowable load index (Compared to standard chains)

Tensile strength index 110% — Tensile strength index (Compared to standard chains)

Temperature Range in Use -10℃～80℃ — Allowable ambient temperature

Main uses

CONST-RUCTION — Feed and drive in construction machines

OUTDOOR — Feed and drive in outdoor equipment

PETROLIUM — Feed and drive of petroleum-related equipment

FORESTRY — Feed and drive of forestry-related equipment

MACHINE — Feed and drive of industrial machinery equipment

AGRICULTURE — Drive of agricultural machines

EXCAVATION — Drive of excavation machines

MINING — Feed and drive of mining equipment

HI-PWR-S Type Roller Chains



High power roller chains with improved fatigue strength and impact strength

HI-PWR-S roller chains are enhanced in fatigue strength and impact strength without changing the dimension in the pin length direction of standard roller chains. Plates are enlarged, and the machining accuracy and assembling accuracy of components are improved. The roller chains hold high transmission efficiency for applications from low to high speeds and are powerful enough to withstand long-term use.

Maximum kilowatt rating diagram

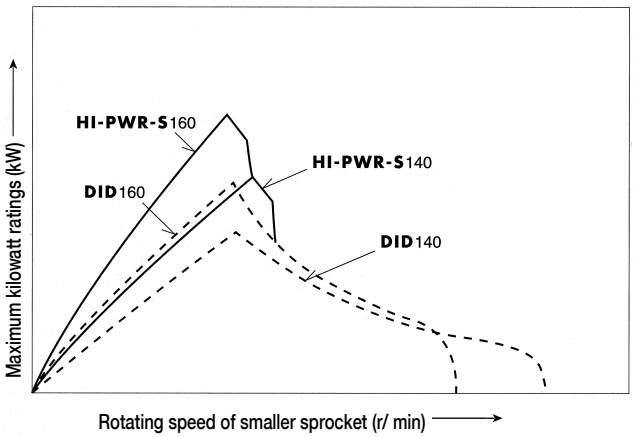

Recommended uses

- Compared to standard roller chains, HI-PWR-S roller chains are higher in maximum kilowatt rating by about 30 percent in a medium to low speed range. They exhibit excellent capability in places where large shock loads are applied, drive units for frequent start/ stop, and also in high speed applications.

<Examples>

- Civil engineering machines such as skid steer, trenchers, trucks, cranes, agitating trucks, forklifts and drive units for conveyors, elevators, stackers, etc.

Selection of chains

In general, select your chain with reference to "Designing of Chain Transmission" (P122~128) and also to the tables of "Drive Performance" and "Dimensions" of HI-PWR-S type roller chains (P52~59)
However, only for a special case of low speed and less shock, "Low-speed selection" (P123) is also applicable.

Sprockets

HI-PWR-S Roller chains and ANSI standard chains are the same in basic dimensions. Use ANSI standard sprockets.

Connecting links and offset links

Use HJ or MJ type connecting link for HI-PWR-S. Pins of HJ type connecting link are interference-fitted with the connecting plates but those of MJ type are clearance-fitted. In case severe condition or place where side force apply to chain, use HJ type connecting link. For the connection between the connecting plate and the connecting pins, spring pins are used instead of cotter pins for a standard roller chain.
The center plates of an connecting link for multiplex chain has bushings pressed in.

HI-PWR-S roller chains do not have any offset link. Use an even number of links.

Never make the holes of the connecting plate larger and never make the pins thinner to facilitate the work for fitting the pins into the connecting plate, since otherwise the fatigue strength will be lowered.

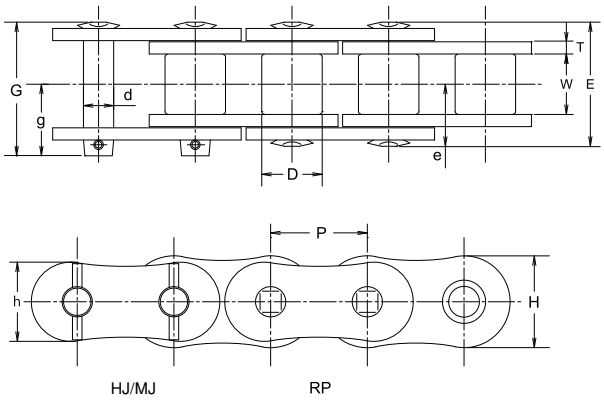

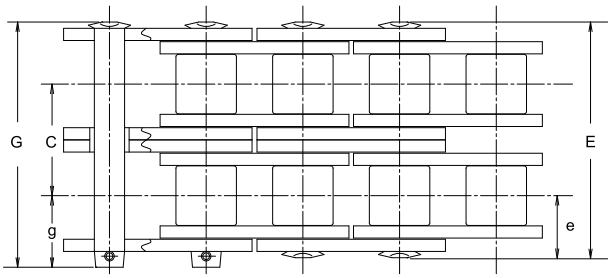

Dimensions

Unit (mm)

Chain No. DID	Chain No. ANSI*	Pitch P	Roller link width W	Roller dia. D	Pin d	Pin E	Pin G	Pin e	Pin g	Transverse pitch C	Plate T	Plate H	Plate h	DID Min. tensile strength kN	DID Min. tensile strength kgf	DID Avg. tensile strength kN	DID Avg. tensile strength kgf	DID Max. allowable load kN	DID Max. allowable load kgf	Approx. Weight (kg/m)
DID HI-PWR-S 80	80	25.40	15.88	15.88	7.94	32.6	35.4	16.4	19.0	29.3	3.2	24.1	20.8	75.6	7,680	84	8,530	18.6	1,890	2.82
DID HI-PWR-S 100	100	31.75	19.05	19.05	9.54	39.5	42.5	19.8	22.7	35.8	4.0	30.1	26.0	117	11,880	127	12,890	30.4	3,090	4.18
DID HI-PWR-S 120	120	38.10	25.40	22.23	11.11	49.7	53.0	24.9	28.2	45.4	4.8	36.2	31.2	162	16,450	186	18,880	40.2	4,080	6.12
DID HI-PWR-S 140	140	44.45	25.40	25.40	12.71	53.6	58.4	26.8	31.7	48.9	5.6	42.2	36.3	216	21,930	245	24,870	53.9	5,470	7.71
DID HI-PWR-S 160	160	50.80	31.75	28.58	14.29	63.6	68.2	31.9	36.5	58.5	6.4	48.2	41.4	273	27,720	313	31,780	70.6	7,170	10.5
DID HI-PWR-S 180	180	57.15	35.72	35.71	17.46	71.5	77.3	35.8	41.6	65.8	7.1	54.3	46.6	379	38,480	412	41,830	83.3	8,460	14.4
DID HI-PWR-S 200	200	63.50	38.10	39.68	19.85	77.9	85.0	39.0	46.0	71.6	8.0	60.3	52.0	460	46,700	500	50,760	98.1	9,960	17.5
DID HI-PWR-S 240	240	76.20	47.63	47.63	23.81	95.2	102.9	47.7	55.3	87.8	9.5	72.3	62.0	667	67,720	725	73,600	132	13,400	24.7

Note: 1. The values of average tensile strength and maximum allowable load are for chains.
2. Ask us for the delivery time.
3. *Equivalent to ANSI

DID HI-PWR-S80 (Please refer to P33 for sprocket)

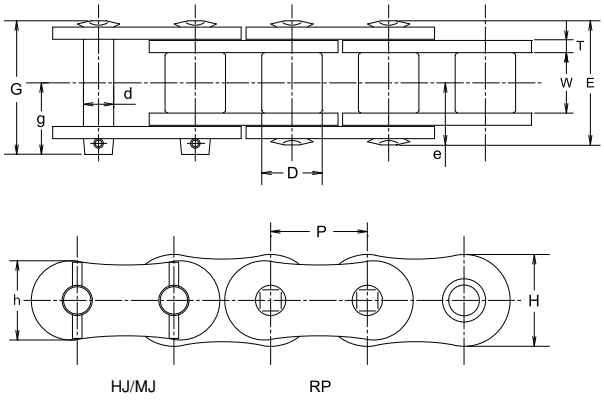

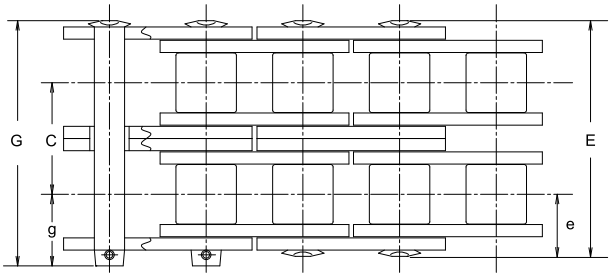

Dimensions

Unit (mm)

Chain No.		Pitch	Roller link width	Roller dia.	Pin					Transverse Pitch	Plate			DID Min. Tensile Strength		DID Avg. Tensile Strength		DID Max. Allowable Load		Approx. Weight (kg/m)
DID	ANSI*	P	W	D	d	E	G	e	g	C	T	H	h	kN	kgf	kN	kgf	kN	kgf	
DID HI-PWR-S 80	80	25.40	15.88	15.88	7.94	32.6	35.4	16.4	19.0	29.3	3.2	24.1	20.8	75.6	7,680	84	8,530	18.6	1,890	2.82
DID HI-PWR-S 80-2	80-2					61.9	64.7							151	15,330	168	17,060	31.6	3,210	5.61
DID HI-PWR-S 80-3	80-3					91.3	94.0							227	23,050	252	25,580	46.5	4,720	8.24

Note: The values of average tensile strength and maximum allowable tension are for chains.
*Equivalent to ANSI

Max. kilowatt Ratings HI-PWR-S80

Unit (kW)

No. of Teeth of Small Sprocket \ Type of Lubrication	Small sprocket rpm (Refer to P132 for the details of lubrication A, B and C.)									
	25	50	100	200	300	400	500	700	900	1000
	A		B					C		
11	1.90	3.55	6.63	12.4	17.8	23.1	28.2	29.6	24.0	—
12	2.09	3.90	7.28	13.6	19.6	25.4	31.0	32.5	27.3	—
13	2.28	4.25	7.94	14.8	21.4	27.7	33.8	35.4	30.8	—
14	2.47	4.61	8.60	16.1	23.1	30.0	36.6	38.4	34.4	—
15	2.66	4.96	9.27	17.3	24.9	32.3	39.5	41.3	38.2	—
16	2.85	5.32	9.94	18.6	26.7	34.6	42.3	44.3	42.1	—
17	3.04	5.68	10.6	19.8	28.5	37.0	45.2	48.0	46.1	—
18	3.24	6.05	11.3	21.1	30.3	39.3	48.1	51.4	50.2	—
19	3.43	6.41	12.0	22.3	32.2	41.7	51.0	54.5	54.4	—
20	3.63	6.77	12.7	23.6	34.0	44.1	53.9	58.8	58.8	50.2
21	3.82	7.14	13.3	24.9	35.8	46.4	56.8	63.3	63.3	54.0
22	4.02	7.51	14.0	26.2	37.7	48.8	59.7	67.8	67.8	57.9
23	4.22	7.88	14.7	27.5	39.5	51.2	62.6	72.5	72.5	61.9
24	4.42	8.25	15.4	28.7	41.4	53.6	65.6	77.3	77.3	66.0
25	4.62	8.62	16.1	30.0	43.3	56.1	68.5	82.2	82.2	70.2
28	5.22	9.75	18.2	34.0	48.9	63.4	77.5	97.4	97.4	83.2
30	5.62	10.5	19.6	36.6	52.7	68.3	83.4	108	108	92.2
32	6.03	11.3	21.0	39.2	56.5	73.2	89.5	117	117	102
35	6.64	12.4	23.2	43.2	62.2	80.6	98.6	129	129	116
40	7.68	14.3	26.7	49.9	71.9	93.1	114	149	149	142
45	8.72	16.3	30.4	56.7	81.6	106	129	169	169	169

Note: Values in the above table are for simplex chain only. For multiplex chains, please multiply the coefficient of multi-strand. (See "Chain Selection" on P122.).

DID HI-PWR-S100 (Please refer to P35 for sprocket)

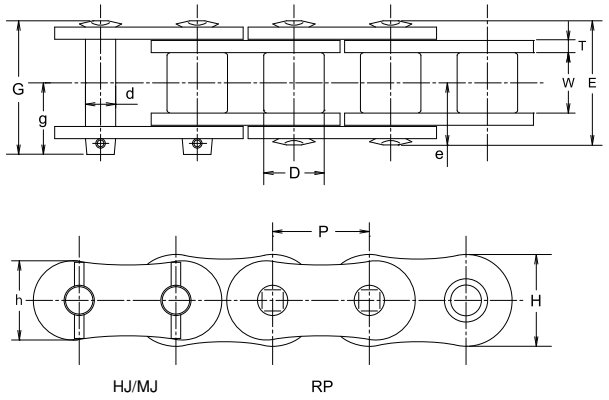

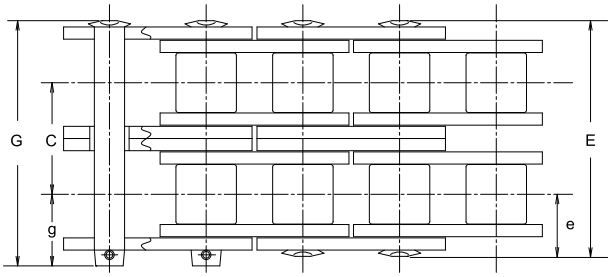

Dimensions

Unit (mm)

Chain No.		Pitch	Roller link width	Roller dia.	Pin					Transverse Pitch	Plate			DID Min. Tensile Strength		DID Avg. Tensile Strength		DID Max. Allowable Load		Approx. Weight (kg/m)
DID	ANSI*	P	W	D	d	E	G	e	g	C	T	H	h	kN	kgf	kN	kgf	kN	kgf	
DID HI-PWR-S 100	100	31.75	19.05	19.05	9.54	39.5	42.5	19.8	22.7	35.8	4.0	30.1	26.0	117	11,880	127	12,890	30.4	3,090	4.18
DID HI-PWR-S 100-2	100-2					75.3	78.3							234	23,760	255	25,890	51.6	5,240	8.21
DID HI-PWR-S 100-3	100-3					111.2	114.2							351	35,630	382	38,780	76	7,720	12.2

Note: The values of average tensile strength and maximum allowable tension are for chains.
*Equivalent to ANSI

Max. kilowatt Ratings HI-PWR-S100

Unit (kW)

No. of Teeth of Small Sprocket \ Type of Lubrication	Small sprocket rpm (Refer to P132 for the details of lubrication A, B and C.)											
	10	25	50	100	200	300	400	500	600	700	800	900
	A			B			C					
11	1.59	3.64	6.81	12.7	23.7	34.2	41.8	41.8	41.8	41.8	—	—
12	1.75	4.00	7.48	14.0	26.1	37.5	47.6	47.6	47.6	47.6	—	—
13	1.91	4.37	8.15	15.2	28.4	40.9	53.0	53.7	53.7	53.7	—	—
14	2.07	4.73	8.83	16.5	30.8	44.3	57.4	60.0	60.0	60.0	—	—
15	2.23	5.10	9.51	17.8	33.2	47.7	61.9	66.6	66.6	66.6	54.5	—
16	2.39	5.46	10.2	19.0	35.5	51.2	66.3	72.1	72.1	72.1	60.0	—
17	2.56	5.83	10.9	20.3	37.9	54.7	70.8	76.9	76.9	76.9	65.7	—
18	2.72	6.21	11.6	21.6	40.4	58.1	75.3	81.8	81.8	81.8	71.6	—
19	2.88	6.58	12.3	22.9	42.8	61.6	79.9	86.7	86.7	86.7	77.7	—
20	3.05	6.96	13.0	24.2	45.2	65.1	84.4	91.8	91.8	91.8	83.9	—
21	3.21	7.33	13.7	25.5	47.7	68.7	89.0	96.8	96.8	96.8	90.2	—
22	3.38	7.71	14.4	26.9	50.1	72.2	93.6	102	102	102	96.8	—
23	3.54	8.09	15.1	28.2	52.6	75.8	98.2	107	107	107	103	—
24	3.71	8.47	15.8	29.5	55.1	79.3	103	112	112	112	110	—
25	3.88	8.85	16.5	30.8	57.6	82.9	107	117	117	117	117	—
28	4.38	10.0	18.7	34.9	65.0	93.7	121	139	139	139	139	—
30	4.72	10.8	20.1	37.6	70.1	101	131	154	154	154	154	—
32	5.06	11.6	21.6	40.3	75.1	108	140	170	170	170	170	142
35	5.58	12.7	23.8	44.4	82.8	119	154	189	189	189	189	163
40	6.45	14.7	27.5	51.2	95.6	138	178	218	219	219	219	199
45	7.32	16.7	31.2	58.2	109	156	203	247	247	247	247	237

Note: Values in the above table are for simplex chain only. For multiplex chains, please multiply the coefficient of multi-strand. (See "Chain Selection" on P122.).

DID HI-PWR-S120 (Please refer to P37 for sprocket)

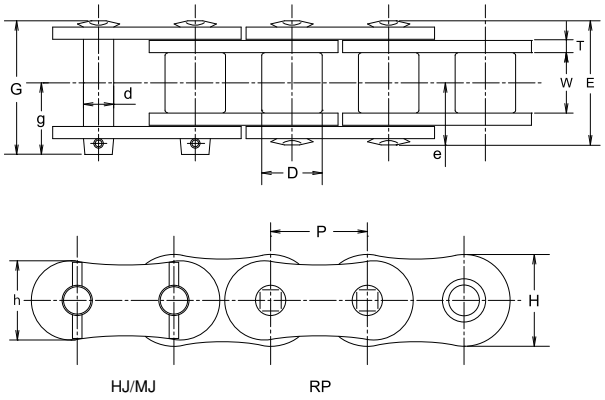

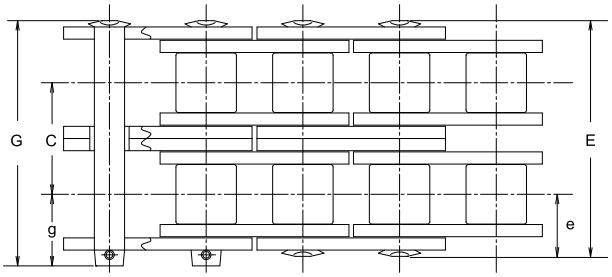

Dimensions

Unit (mm)

Chain No.		Pitch	Roller link width	Roller dia.	Pin					Transverse Pitch	Plate			DID Min. Tensile Strength		DID Avg. Tensile Strength		DID Max. Allowable Load		Approx. Weight (kg/m)
DID	ANSI*	P	W	D	d	E	G	e	g	C	T	H	h	kN	kgf	kN	kgf	kN	kgf	
DID HI-PWR-S 120	120	38.10	25.40	22.23	11.11	49.7	53.0	24.9	28.2	45.4	4.8	36.2	31.2	162	16,450	186	18,880	40.2	4,080	6.12
DID HI-PWR-S 120-2	120-2					95.2	98.5							324	32,890	372	37,770	68.3	6,930	12.2
DID HI-PWR-S 120-3	120-3					140.6	143.9							486	49,340	559	56,750	100	10,150	18.2

Note: The values of average tensile strength and maximum allowable tension are for chains.
*Equivalent to ANSI

Max. kilowatt Ratings HI-PWR-S120

Unit (kW)

No. of Teeth of Small Sprocket \ Type of Lubrication	Small sprocket rpm (Refer to P132 for the details of lubrication A, B and C.)											
	10	25	50	100	150	200	300	400	500	600	700	800
	A		B				C					
11	2.53	5.79	10.8	20.2	29.0	37.6	54.2	63.6	63.6	60.9	—	—
12	2.78	6.36	11.9	22.2	31.9	41.3	59.5	69.8	69.8	69.4	—	—
13	3.04	6.93	12.9	24.2	34.8	45.1	64.9	78.3	78.3	78.3	—	—
14	3.29	7.51	14.0	26.2	37.7	48.8	70.3	87.5	87.5	87.5	—	—
15	3.54	8.09	15.1	28.2	40.6	52.6	75.8	97.1	97.1	97.0	—	—
16	3.80	8.67	16.2	30.2	43.5	56.4	81.2	105	107	107	—	—
17	4.06	9.26	17.3	32.3	46.5	60.2	86.7	112	117	117	92.9	—
18	4.32	9.85	18.4	34.3	49.4	64.1	92.3	120	127	127	101	—
19	4.58	10.4	19.5	36.4	52.4	67.9	97.8	127	135	135	110	—
20	4.84	11.0	20.6	38.5	55.4	71.8	103	134	143	143	119	—
21	5.10	11.6	21.7	40.5	58.4	75.7	109	141	151	151	128	—
22	5.36	12.2	22.8	42.6	61.4	79.6	115	148	158	158	137	—
23	5.63	12.8	24.0	44.7	64.4	83.5	120	156	166	166	146	—
24	5.89	13.4	25.1	46.8	67.5	87.4	126	163	174	174	156	—
25	6.16	14.1	26.2	48.9	70.5	91.3	132	170	182	182	166	—
30	7.50	17.1	31.9	59.6	85.8	111	160	208	221	221	218	—
32	8.04	18.3	34.2	63.9	92.0	119	172	222	237	237	237	—
35	8.86	20.2	37.7	70.4	101	131	189	245	261	261	261	—
40	10.2	23.3	43.6	81.3	117	152	219	283	302	302	302	274
45	11.6	26.5	49.5	92.3	133	172	248	322	360	360	360	328

Note: Values in the above table are for simplex chain only. For multiplex chains, please multiply the coefficient of multi-strand. (See "Chain Selection" on P122.).

DID HI-PWR-S140 (Please refer to P39 for sprocket)

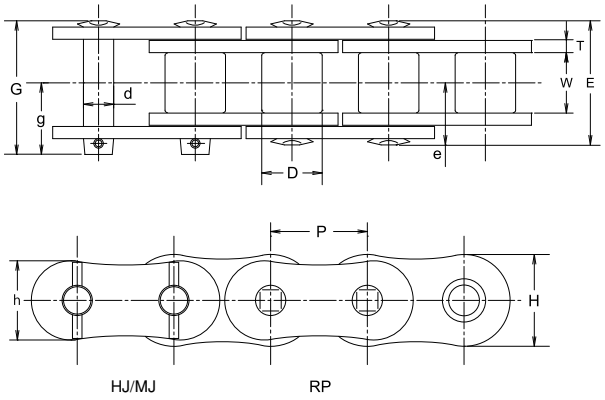

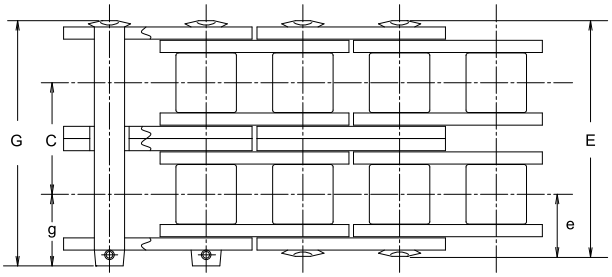

Dimensions

Unit (mm)

Chain No.		Pitch	Roller link width	Roller dia.	Pin					Transverse Pitch	Plate			DID Min. Tensile Strength		DID Avg. Tensile Strength		DID Max. Allowable Load		Approx. Weight (kg/m)
DID	ANSI*	P	W	D	d	E	G	e	g	C	T	H	h	kN	kgf	kN	kgf	kN	kgf	
DID HI-PWR-S 140	140	44.45	25.40	25.40	12.71	53.6	58.4	26.8	31.7	48.9	5.6	42.2	36.3	216	21,930	245	24,870	53.9	5,470	7.71
DID HI-PWR-S 140-2	140-2					102.6	107.4							432	43,860	490	49,750	91.7	9,310	15.3
DID HI-PWR-S 140-3	140-3					151.5	156.3							648	65,790	735	74,620	134	13,600	22.9

Note: The values of average tensile strength and maximum allowable tension are for chains.
*Equivalent to ANSI

Max. kilowatt Ratings HI-PWR-S140

Unit (kW)

No. of Teeth of Small Sprocket \ Type of Lubrication	Small sprocket rpm (Refer to P132 for the details of lubrication A, B and C.)													
	10	25	50	100	150	200	250	300	350	400	450	500	550	600
	A		B				C							
11	3.97	9.05	16.9	31.5	45.4	58.9	72.0	84.8	90.6	90.6	90.6	90.6	78.6	68.9
12	4.36	9.95	18.6	34.7	49.9	64.7	79.0	93.1	103	103	103	103	89.5	78.6
13	4.75	10.8	20.2	37.8	54.4	70.5	86.2	102	116	116	116	116	101	88.6
14	5.15	11.8	21.9	40.9	59.0	76.4	93.4	110	126	127	127	127	113	99.0
15	5.55	12.7	23.6	44.1	63.5	82.3	101	119	136	137	137	137	125	110
16	5.95	13.6	25.3	47.3	68.1	88.2	108	127	146	147	147	147	138	121
17	6.35	14.5	27.1	50.5	72.7	94.2	115	136	156	156	156	156	151	132
18	6.75	15.4	28.8	53.7	77.3	100	122	144	166	166	166	166	164	144
19	7.16	16.3	30.5	56.9	82.0	106	130	153	176	178	178	178	178	157
20	7.57	17.3	32.2	60.2	86.7	112	137	162	186	193	193	193	193	169
21	7.98	18.2	34.0	63.4	91.3	118	145	170	196	207	207	207	207	182
22	8.39	19.2	35.7	66.7	96.1	124	152	179	206	222	222	222	222	195
23	8.80	20.1	37.5	70.0	101	131	160	188	216	236	236	236	236	208
24	9.22	21.0	39.3	73.3	106	137	167	197	226	247	247	247	247	222
25	9.63	22.0	41.0	76.6	110	143	175	206	236	259	259	259	259	236
30	11.7	26.8	50.0	93.2	134	174	213	251	288	315	315	315	315	311
32	12.6	28.7	53.6	100	144	187	228	269	309	342	342	342	342	342
35	13.9	31.6	59.0	110	159	205	251	296	340	383	391	391	391	391
40	16.0	36.5	68.2	127	183	237	290	342	393	430	430	430	430	—
45	18.2	41.5	77.4	144	208	270	329	388	446	498	498	498	498	—

Note: Values in the above table are for simplex chain only. For multiplex chains, please multiply the coefficient of multi-strand. (See "Chain Selection" on P122.).

DID HI-PWR-S160 (Please refer to P41 for sprocket)

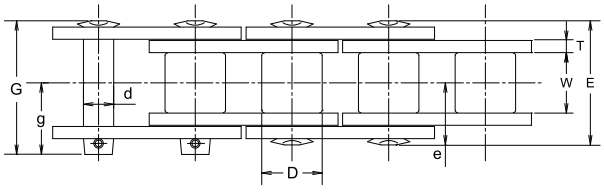

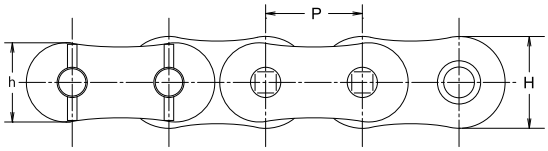

HJ/MJ RP

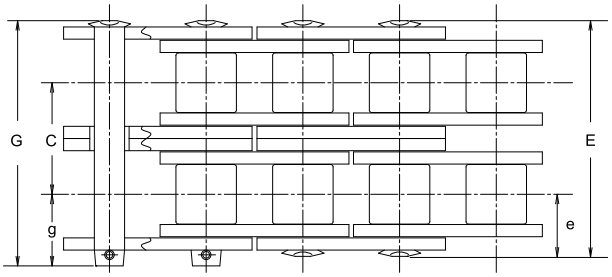

Dimensions

Unit (mm)

Chain No.		Pitch	Roller link width	Roller dia.	Pin					Transverse Pitch	Plate			DID Min. Tensile Strength		DID Avg. Tensile Strength		DID Max. Allowable Load		Approx. Weight (kg/m)
DID	ANSI*	P	W	D	d	E	G	e	g	C	T	H	h	kN	kgf	kN	kgf	kN	kgf	
DID HI-PWR-S 160	160	50.80	31.75	28.58	14.29	63.6	68.2	31.9	36.5	58.5	6.4	48.2	41.4	273	27,720	313	31,780	70.6	7,170	10.5
DID HI-PWR-S 160-2	160-2					122.2	126.8							546	55,430	626	63,550	120	12,180	20.8
DID HI-PWR-S 160-3	160-3					180.8	185.4							819	83,150	939	95,330	176	17,870	31.2

Note: The values of average tensile strength and maximum allowable tension are for chains.
*Equivalent to ANSI

Max. kilowatt Ratings HI-PWR-S160

Unit (kW)

No. of Teeth of Small Sprocket \ Type of Lubrication	Small sprocket rpm (Refer to P132 for the details of lubrication A, B and C.)												
	10	25	50	100	150	200	250	300	350	400	450	500	550
	A	B				C							
11	5.94	13.6	25.3	47.2	68.0	88.1	108	118	118	118	118	101	—
12	6.53	14.9	27.8	51.9	74.7	96.8	118	135	135	135	135	115	—
13	7.12	16.2	30.3	56.6	81.5	106	129	148	148	148	148	130	—
14	7.71	17.6	32.8	61.3	88.3	114	140	161	161	161	161	145	—
15	8.31	19.0	35.4	66.0	95.1	123	151	173	173	173	173	161	—
16	8.91	20.3	37.9	70.8	102	132	161	186	186	186	186	177	—
17	9.51	21.7	40.5	75.6	109	141	172	198	198	198	198	194	—
18	10.1	23.1	43.1	80.4	116	150	183	211	211	211	211	211	—
19	10.7	24.5	45.7	85.2	123	159	194	229	229	229	229	229	198
20	11.3	25.9	48.3	90.1	130	168	205	242	247	247	247	247	214
21	12.0	27.3	50.9	94.9	137	177	217	255	266	266	266	266	231
22	12.6	28.7	53.5	99.8	144	186	228	268	285	285	285	285	247
24	13.8	31.5	58.8	110	158	205	250	295	316	316	316	316	282
25	14.4	32.9	61.4	115	165	214	261	308	330	330	330	330	299
30	17.6	40.1	74.8	140	201	260	318	375	402	402	402	402	394
32	18.8	43.0	80.2	150	216	279	341	402	434	434	434	434	434
35	20.8	47.3	88.3	165	237	308	376	443	496	496	496	496	496
40	24.0	54.7	102	190	274	355	434	512	588	598	598	598	598
45	27.2	62.1	116	216	311	403	493	581	654	654	654	654	654

Note: Values in the above table are for simplex chain only. For multiplex chains, please multiply the coefficient of multi-strand. (See "Chain Selection" on P122.).

DID HI-PWR-S180 (Please refer to P43 for sprocket)

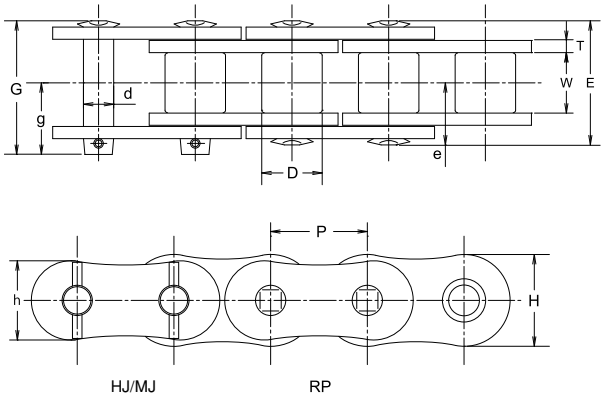

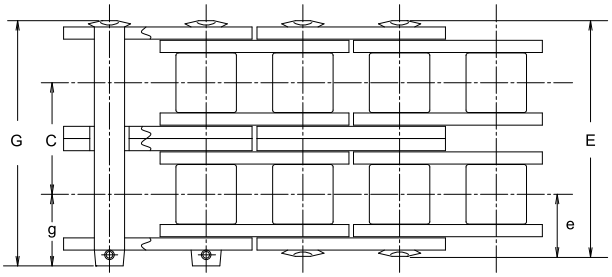

Dimensions

Unit (mm)

Chain No.		Pitch	Roller link width	Roller dia.	Pin					Transverse Pitch	Plate			DID Min. Tensile Strength		DID Avg. Tensile Strength		DID Max. Allowable Load		Approx. Weight (kg/m)
DID	ANSI*	P	W	D	d	E	G	e	g	C	T	H	h	kN	kgf	kN	kgf	kN	kgf	
DID HI-PWR-S 180	180					71.5	77.3							379	38,480	412	41,830	83.3	8,460	14.4
DID HI-PWR-S 180-2	180-2	57.15	35.72	35.71	17.46	137.4	143.2	35.8	41.6	65.8	7.1	54.3	46.6	758	76,950	824	83,650	141	14,310	28.6
DID HI-PWR-S 180-3	180-3					203.3	209.1							1,137	115,430	1,236	125,480	208	21,120	42.7

Note: The values of average tensile strength and maximum allowable tension are for chains.
*Equivalent to ANSI

Max. kilowatt Ratings HI-PWR-S180

Unit (kW)

No. of Teeth of Small Sprocket \ Type of Lubrication	Small sprocket rpm (Refer to P132 for the details of lubrication A, B and C.)									
	10	25	50	100	150	200	250	300	350	400
	A	B			C					
13	8.88	20.3	37.8	70.6	102	132	154	154	154	—
14	9.62	22.0	41.0	76.5	110	143	167	167	167	—
15	10.4	23.7	44.2	82.4	119	154	180	180	180	—
16	11.1	25.4	47.3	88.4	127	165	193	193	193	—
17	11.9	27.1	50.6	94.3	136	176	206	206	206	—
18	12.6	28.8	53.8	100	145	187	219	219	219	—
19	13.4	30.5	57.0	106	153	198	232	232	232	—
20	14.2	32.3	60.2	112	162	210	256	277	277	277
21	14.9	34.0	63.5	119	171	221	270	292	292	292
22	15.7	35.8	66.8	125	180	233	284	307	307	307
24	17.2	39.3	73.4	137	197	255	312	337	337	337
26	18.8	42.9	80.0	149	215	279	340	368	368	368
30	21.9	50.0	93.4	174	251	325	397	429	429	429
35	25.9	59.1	110	206	296	384	469	506	506	506
40	29.9	68.3	127	238	342	444	542	585	585	585
45	34.0	77.5	145	270	389	504	616	660	660	660

Note: Values in the above table are for simplex chain only. For multiplex chains, please multiply the coefficient of multi-strand. (See "Chain Selection" on P122.).

DID HI-PWR-S200 (Please refer to P45 for sprocket)

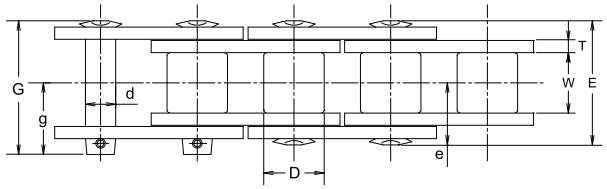

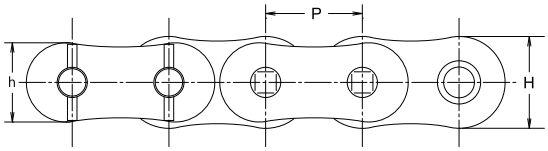

HJ/MJ RP

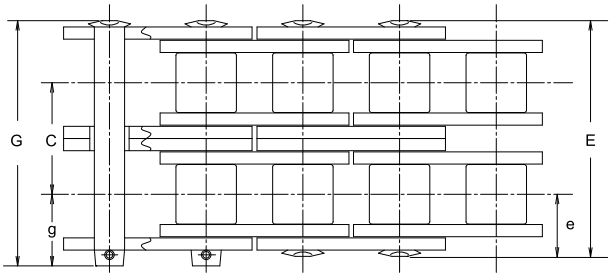

Dimensions

Unit (mm)

Chain No.		Pitch	Roller link width	Roller dia.	Pin					Transverse Pitch	Plate			DID Min. Tensile Strength		DID Avg. Tensile Strength		DID Max. Allowable Load		Approx. Weight (kg/m)
DID	ANSI*	P	W	D	d	E	G	e	g	C	T	H	h	kN	kgf	kN	kgf	kN	kgf	
DID HI-PWR-S 200	200	63.50	38.10	39.68	19.85	77.9	85.0	39.0	46.0	71.6	8.0	60.3	52.0	460	46,700	500	50,760	98.1	9,960	17.5
DID HI-PWR-S 200-2	200-2					149.6	156.6							920	93,400	1,000	101,520	166	16,850	34.7
DID HI-PWR-S 200-3	200-3					221.3	228.3							1,380	140,100	1,500	152,280	245	24,870	52.0

Note: The values of average tensile strength and maximum allowable tension are for chains.
*Equivalent to ANSI

Max. kilowatt Ratings HI-PWR-S200

Unit (kW)

No. of Teeth of Small Sprocket \ Type of Lubrication	Small sprocket rpm (Refer to P132 for the details of lubrication A, B and C.)											
	10	15	20	30	40	50	60	80	100	150	200	250
	A		B						C			
13	12.4	17.8	23.1	33.2	43.1	52.6	62.0	80.4	98.2	141	183	194
14	13.4	19.3	25.0	36.0	46.7	57.0	67.2	87.1	106	153	199	211
15	14.4	20.8	26.9	38.8	50.3	61.4	72.4	93.8	115	165	214	234
16	15.5	22.3	28.9	41.6	53.9	65.9	77.6	101	123	177	229	258
17	16.5	23.8	30.8	44.4	57.5	70.3	82.9	107	131	189	245	283
18	17.6	25.3	32.8	47.2	61.2	74.8	88.2	114	140	201	261	308
19	18.6	26.8	34.8	50.1	64.9	79.3	93.5	121	148	213	276	334
20	19.7	28.4	36.7	52.9	68.6	83.8	98.8	128	156	225	292	355
21	20.8	29.9	38.7	55.8	72.3	88.4	104	135	165	238	308	374
22	21.8	31.4	40.7	58.7	76.0	92.9	109	142	173	250	324	393
24	24.0	34.5	44.7	64.5	83.5	102	120	156	190	274	355	432
26	26.1	37.7	48.8	70.3	91.0	111	131	170	208	299	388	—

Note: Values in the above table are for simplex chain only. For multiplex chains, please multiply the coefficient of multi-strand. (See "Chain Selection" on P122.).

DID HI-PWR-S240 (Please refer to P47 for sprocket)

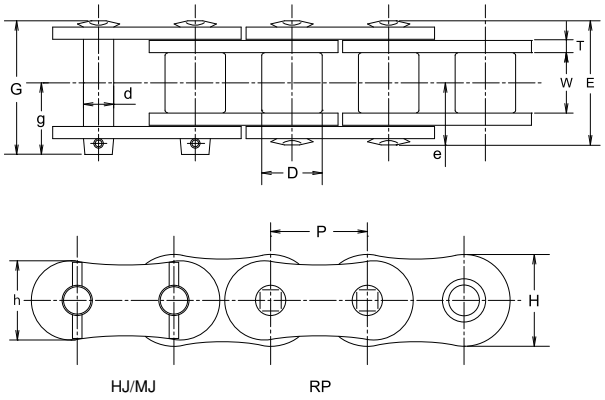

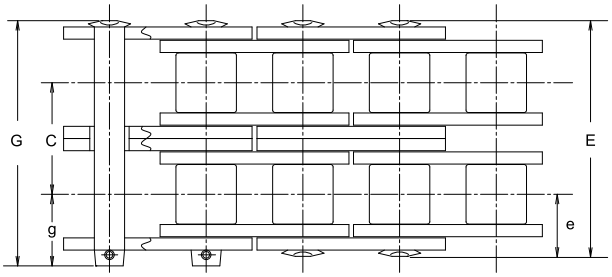

Dimensions

Unit (mm)

Chain No.		Pitch	Roller link width	Roller dia.	Pin					Transverse Pitch	Plate			DID Min. Tensile Strength		DID Avg. Tensile Strength		DID Max. Allowable Load		Approx. Weight
DID	ANSI*	P	W	D	d	E	G	e	g	C	T	H	h	kN	kgf	kN	kgf	kN	kgf	(kg/m)
DID HI-PWR-S 240	240	76.20	47.63	47.63	23.81	95.2	102.9	47.7	55.3	87.8	9.50	72.3	62.0	667	67,720	725	73,600	132	13,400	24.7
DID HI-PWR-S 240-2	240-2					183.1	190.7							1,334	135,430	1,450	147,210	225	22,840	49.0
DID HI-PWR-S 240-3	240-3					270.9	278.5							2,001	203,150	2,175	220,810	331	33,600	73.3

Note: The values of average tensile strength and maximum allowable tension are for chains.
*Equivalent to ANSI

Max. kilowatt Ratings HI-PWR-S240

Unit (kW)

No. of Teeth of Small Sprocket \ Type of Lubrication	Small sprocket rpm (Refer to P132 for the details of lubrication A, B and C.)												
	5	10	15	20	25	30	40	50	60	80	100	125	150
	A		B							C			
13	10.0	18.7	26.9	34.9	42.6	50.2	65.1	79.5	93.7	121	148	181	214
14	10.8	20.2	29.2	37.8	46.2	54.4	70.5	86.2	102	132	161	197	232
15	11.7	21.8	31.4	40.7	49.8	58.6	76.0	92.8	109	142	173	212	250
16	12.5	23.4	33.7	43.6	53.3	62.9	81.4	99.5	117	152	186	227	268
17	13.4	25.0	36.0	46.6	57.0	67.1	86.9	106	125	162	198	242	286
18	14.2	26.6	38.3	49.6	60.6	71.4	92.5	113	133	173	211	258	304
19	15.1	28.2	40.6	52.5	64.2	75.7	98.0	120	141	183	224	273	322
20	15.9	29.8	42.9	55.5	67.9	80.0	104	127	149	193	236	289	340
21	16.8	31.4	45.2	58.5	71.6	84.3	109	134	157	204	249	305	359
22	17.7	33.0	47.5	61.6	75.2	88.7	115	140	165	214	262	320	—
24	19.4	36.2	52.2	67.6	82.7	97.4	126	154	182	235	288	352	—
26	21.2	39.5	56.9	73.7	90.1	106	138	168	198	257	314	384	—

Note: Values in the above table are for simplex chain only. For multiplex chains, please multiply the coefficient of multi-strand. (See "Chain Selection" on P122.).

HK Type Roller Chains



Downsizing Your System with Higher Power Chains

HK type roller chains conform to H type of ANSI, and their thickness of inner and outer link plates are equal to those of the next larger size chain. Therefore, HK type roller chains are higher in tensile strength by about 20% and in maximum allowable load by about 15% than those of standard roller chains. Since the weight of the chains is also larger, HK type roller chains are suitable for the application of heavy duty at low speed.

Recommended uses

- Optimal for places where higher strength is required but large and heavier chains cannot be used.

<Examples>

Asphalt finishers

HK Type Connecting Link and Offset Link

	Connecting link		Offset link	
	Clearance fit	Interference fit	1-Pitch Offset link (Clearance fit)	2-Pitch Offset link (Interference fit)
Applicable connecting link	**RJ: DID 50** or smaller **CJ: DID 80** or langer **RJ/ CJ: DID 60**	**FJ: DID 50** or smaller **HJ: DID 80** or langer **FJ/ HJ: DID 60**	**OJ:** exclusive use for **HK** (unavailable for **DID 40**)	**2POJ:** exclusive use for **HK** (unavailable for **DID 40**)
Tensile Strength	Same as chain			

Selection of chains

Select a proper HK type roller chain based on "Low-speed selection". (P123)
For the maximum allowable load, see the following table of dimensions.

HK type roller chains are available up to triplex.

Sprockets

Use standard sprockets for a simplex HK roller chain
Since the transverse pitches (C dimension: see P61) are larger than those of standard chains in the case of duplex or triplex, standard sprockets cannot be used. Refer to the sprocket tooth profiles for HK. (see P118~119)

Connecting link and offset link

The tensile strength of connecting links and offset links are listed on the left, but the maximum allowable load is lower than that of the base chain. Please consult us should you have any questions. It is recommended to use the connecting link of interference-fitted. (FJ, HJ)

Never make the holes of the connecting plate larger and never make the pins thinner to facilitate the work for fitting the pins into the connecting plate, since otherwise the fatigue strength will be lowered.

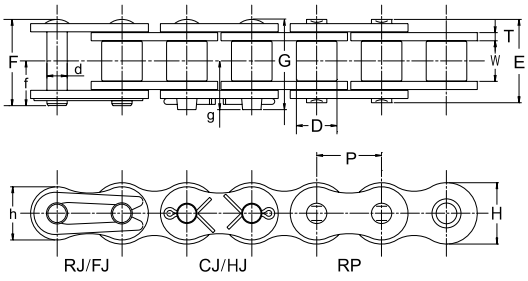

Dimensions

Unit (mm)

Chain No.	Pitch	Roller link width	Roller dia.	Pin						Plate			Min. tensile strength		Avg. tensile strength		Max. allowable load		Approx. weight (kg/m)
	P	W	D	d	E	F	G	f	g	T	H	h	kN	kgf	kN	kgf	kN	kgf	
DID 40HK	12.70	7.95	7.92	3.97	18.5	19.5	—	10.5	—	2.0	12.0	10.4	19.6	1,990	21.5	2,180	4.51	460	0.72
DID 50HK	15.875	9.53	10.16	5.09	21.8	23.4	—	12.6	—	2.4	15.0	13.0	33.3	3,380	36.3	3,690	7.85	800	1.12
DID 60HK	19.05	12.70	11.91	5.96	28.7	30.5	31.2	16.1	16.9	3.2	18.1	15.6	47.1	4,780	52	5,280	10.7	1,090	1.81

Note: 1. The values of average tensile strength and maximum allowable tension are for chains.
2. When grooving using sprockets with smaller number of teeth, the grooves may interfere with the chain outer plate. Consult us for advise.
3. Ask us for the delivery time.

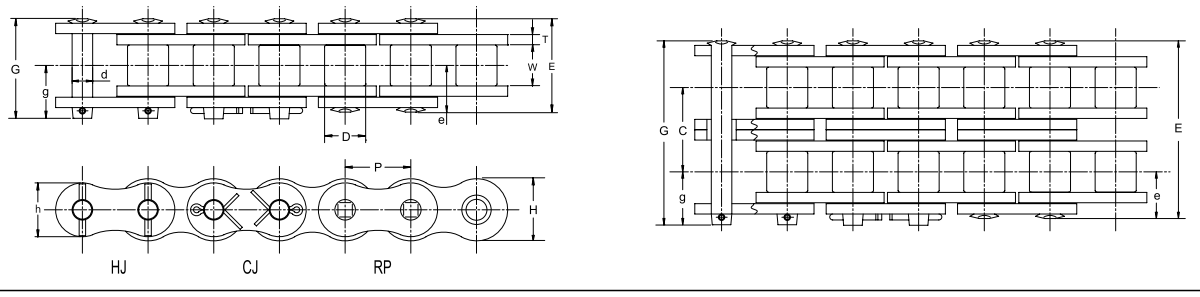

Dimensions

Unit (mm)

Chain No.	Pitch	Roller link width	Roller dia.	Pin					Transverse Pitch	Plate			Min. tensile strength		Avg. tensile strength		Max. allowable load		Approx. weight (kg/m)
	P	W	D	d	E	G	e	g	C	T	H	h	kN	kgf	kN	kgf	kN	kgf	
DID 80HK					35.9	38.7							81.3	8,250	96.1	9,760	16.6	1,690	2.97
DID 80HK-2	25.40	15.88	15.88	7.94	68.5	71.3	18.0	20.6	32.6	4.0	24.0	20.8	162	16,450	192	19,490	28.3	2,870	5.88
DID 80HK-3					101.2	104.0							244	24,770	288	29,240	41.6	4,220	8.76
DID 100HK					42.7	45.8							123	12,490	142	14,420	26.4	2,680	4.16
DID 100HK-2	31.75	19.05	19.05	9.54	82.0	85.0	21.4	24.4	39.1	4.8	29.9	26.0	246	24,970	284	28,830	45	4,570	8.23
DID 100HK-3					121.1	124.1							369	37,460	426	43,250	66.1	6,710	12.27
DID 120HK					53.2	56.5							167	16,950	191	19,390	34.3	3,480	6.08
DID 120HK-2	38.10	25.40	22.23	11.11	102.2	105.5	26.6	29.9	48.9	5.6	35.9	31.2	334	33,910	382	38,780	58.3	5,920	12.04
DID 120HK-3					151.1	154.4							501	50,860	573	58,170	85.8	8,710	17.94
DID 140HK					56.9	61.7							217	22,030	250	25,380	45.1	4,580	8.81
DID 140HK-2	44.45	25.40	25.40	12.71	109.2	114.0	28.5	33.3	52.2	6.4	41.9	36.3	434	44,060	500	50,760	76.6	7,780	17.44
DID 140HK-3					161.4	166.2							651	66,090	750	76,140	113	11,470	25.99
DID 160HK					67.0	71.6							278	28,220	318	32,280	58.8	5,970	10.93
DID 160HK-2	50.80	31.75	28.58	14.29	129.0	133.6	33.5	38.2	61.9	7.1	47.8	41.4	556	56,450	637	64,670	100	10,150	21.64
DID 160HK-3					191.9	195.6							834	84,670	956	97,060	147	14,920	32.24
DID 180HK					74.9	80.8							402	40,810	441	44,770	71.5	7,260	14.81
DID 180HK-2	57.15	35.72	35.71	17.46	144.2	150.0	37.5	43.3	69.2	8.0	53.8	46.6	804	81,620	882	89,540	121	12,280	29.32
DID 180HK-3					213.5	219.3							1,200	121,830	1,320	134,010	178	18,070	43.69
DID 200HK					84.7	91.7							487	49,440	558	56,650	83.3	8,460	19.17
DID 200HK-2	63.50	38.10	39.68	19.85	163.0	170.0	42.4	49.4	78.3	9.5	60.0	52.0	974	98,880	1,110	112,690	141	14,310	37.95
DID 200HK-3					241.4	248.4							1,461	148,320	1,670	169,540	208	21,120	56.55
DID 240HK					108.5	116.3							768	77,970	882	89,540	112	11,370	28.30
DID 240HK-2	76.20	47.63	47.63	23.81	209.9	217.6	54.3	61.7	101.2	12.7	71.5	62.0	1,536	155,940	1,760	178,680	191	19,390	56.03
DID 240HK-3					311.1	318.8							2,304	233,910	2,640	268,020	281	28,530	83.48

Note: 1. The above chains are of riveted pin type (RP). As for cotter pin type (CP), consult us.
2. The values of average tensile strength and maximum allowable tension are for chains.
3. When grooving using sprockets with smaller number of teeth, the grooves may interfere with the chain outer plate. Consult us.

HI-PWR-SHK Type Roller Chains



High-end type of the high strength series

The DID HI-PWR-SHK roller chains have thicker link plates than HI-PWR-S roller chains, and are the highest in tensile strength and allowable load among general application chains, thus being suitable for low speed heavy duty transmission.

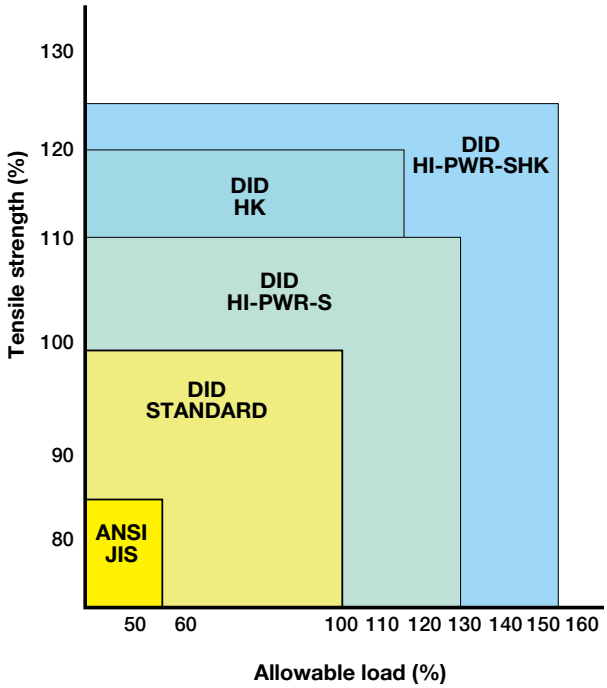

Recommended uses

- The HI-PWR-SHK roller chains are 25 percent higher in tensile strength and 50 percent higher in maximum allowable load than the standard roller chains, but since their weight is heavier, driving performance declines at high speed. So, they are suitable for heavy duty at low speed applications.

<Examples>

Multilevel parking machines, pipe benders, construction machines, etc.

Selection of chains

Select a proper HI-PWR-SHK type chain based on "Low-speed selection" (P123)
For the maximum allowable load, see the following table of dimensions.
HI-PWR-SHK series is available in simplex.

Sprockets

Standard sprockets for multiplex chains cannot be used.

Connecting links and offset links

The best feature of the HI-PWR-SHK roller chains is high maximum allowable load. Therefore, interference-fitted connecting links (HJ type connecting links) with little strength degradation are used.
The connecting plate and the connecting pins are connected with spring pins. The tensile strength of an HJ type connecting link is equivalent to that of the chain, but the allowable load is somewhat lower than that of the chain.

HI-PWR-S type roller chains do not have any offset link. Use an even number of links.

Never make the holes of the connecting plate larger and never make the pins thinner to facilitate the work for fitting the pins into the connecting plate, since otherwise the fatigue strength will be lowered.

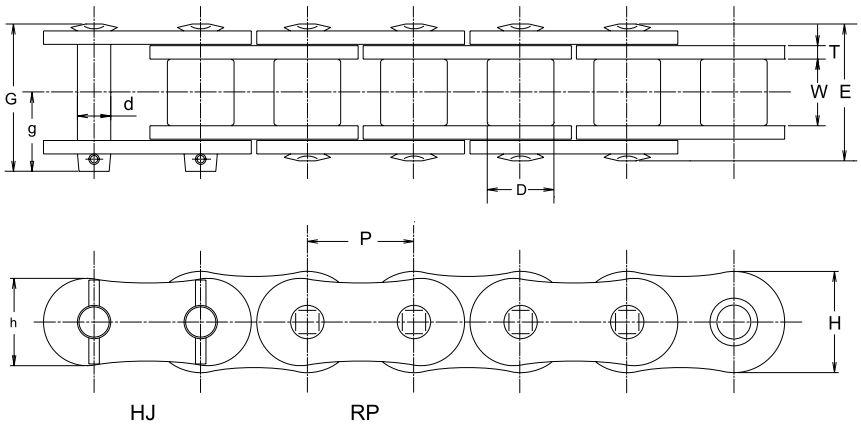

Dimensions

Unit (mm)

Chain No.	Pitch	Roller link width	Roller dia.	Pin				Plate			Min. tensile strength		Avg. tensile strength		Max. allowable load		Approx. weight (kg/m)
	P	W	D	d	E	G	g	T	H	h	kN	kgf	kN	kgf	kN	kgf	
DID HI-PWR-S 80HK	25.40	15.88	15.88	7.94	35.9	38.7	20.6	4.0	24.1	20.8	85.4	8,670	98.1	9,960	22.5	2,280	3.12
DID HI-PWR-S 100HK	31.75	19.05	19.05	9.54	42.7	45.8	24.4	4.8	30.1	26.0	132	13,400	145	14,720	34.3	3,480	4.37
DID HI-PWR-S 120HK	38.10	25.40	22.23	11.11	53.2	56.5	29.9	5.6	36.2	31.2	171	17,360	196	19,900	45.1	4,580	6.39
DID HI-PWR-S 140HK	44.45	25.40	25.40	12.71	56.9	61.7	33.3	6.4	42.2	36.3	222	22,540	255	25,890	60.8	6,170	9.25
DID HI-PWR-S 160HK	50.80	31.75	28.58	14.29	67.0	71.6	38.2	7.1	48.2	41.4	282	28,630	323	32,790	77.4	7,860	11.48
DID HI-PWR-S 180HK	57.15	35.72	35.71	17.46	74.9	80.8	43.3	8.0	54.3	46.6	422	42,840	461	46,800	91.2	9,260	15.55
DID HI-PWR-S 200HK	63.50	38.10	39.68	19.85	84.7	91.7	49.4	9.5	60.3	52.0	520	52,790	598	60,710	112	11,370	20.13
DID HI-PWR-S 240HK	76.20	47.63	47.63	23.81	108.5	116.3	61.7	12.7	72.3	62.0	803	81,520	922	93,600	155	15,740	29.72

Note: 1. The values of average tensile strength and maximum allowable tension are for chains.
2. When grooving using sprockets with smaller number of teeth, the grooves may interfere with the chain outer plate. Consult us.

Dependable in severe conditions

	X-Ring Chain(LX)/O-Ring Chain(LD)	Fit X-Ring Chain(LF)
Name		
Features	1. DID X-Ring chain is the best value of maintenance-free chain available. 2. The patented X-Ring design has half the friction of normal O-Ring chain and provides great sealing performance. It keeps the dirt out and the grease in much better than any other O-rings. 3. Up to 2 times longer wear resistance performance compared to normal O-Ring chains. 4. Great cost savings can be achieved through longer life and less down time. 5. British Standard X-ring Chain available (P70~75).	1. Strength is equivalent to existing X-Ring Chain/LX. 2. Attachment can be designed using the same dimensions as JIS/ANSI standard. 3. Standard JIS/ANSI sprockets can be used for even multiplex.
Functions	Dirty Environment, Dusty, Maintenance-Free, Tensile strength index 100%, ※ Temperature Range in Use −10℃~120℃	Dirty Environment, Dusty, Maintenance-Free, Tensile strength index 100%, Temperature Range in Use −10℃~80℃
Main uses	FOOD, PACK, TEXTILE, PRINT, CONVEYOR, CANNING, CONST-RUCTION, HOME APPLIANCE, AGRICULTURE	FOOD, PACK, TEXTILE, PRINT, CONVEYOR, CANNING, CONST-RUCTION, HOME APPLIANCE, AGRICULTURE

※ LX: Temp. -10°C~120°C, LD: Temp. -10°C~80°C

Chain No.		O-Ring/X-Ring	Sinterd Bushing
DID 25		-	-
DID 35		LD	-
DID 41		-	-
DID 40	08B	LX, LF	UR, URN
DID 50		LX, LF	UR, URN
DID 60	12B	LX, LF	UR, URN
DID 80	16B	LX, LD	UR, URN
DID 100		LD	-
DID 120		LD	-
DID 140		LD	-
DID 160		LD	-
DID 200		LD	-
DID 240		LD	-

Note: British standard type (JIS B) to be only X-ring available.

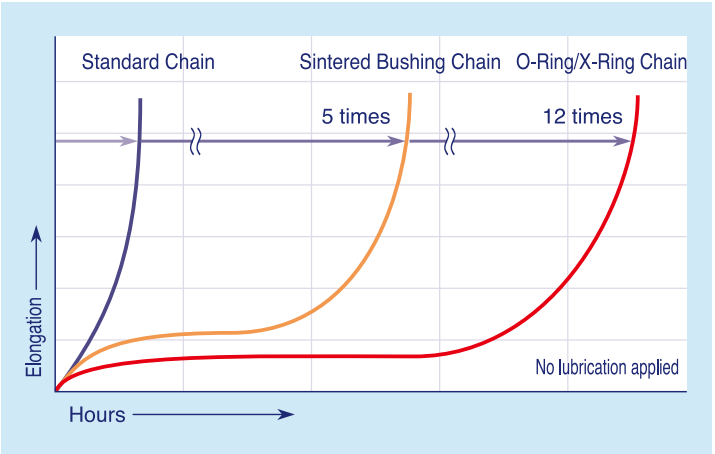

Sintered Bushing Roller Chain (UR), (URN)



Name

Features

1. Sintered bushing is incorporated.
2. Ultimate Life Chain for low speed and light lord applications.
3. Up to 5 times longer wear life than standard chain.

Functions

Maintenance-Free | Tensile strength index 70% | Temperature Range in Use −10℃～60℃

Main uses

FOOD | PACK | TEXTILE | PRINT | CONVEYOR | HOME APPLIANCE

Sectional view of sintered alloy

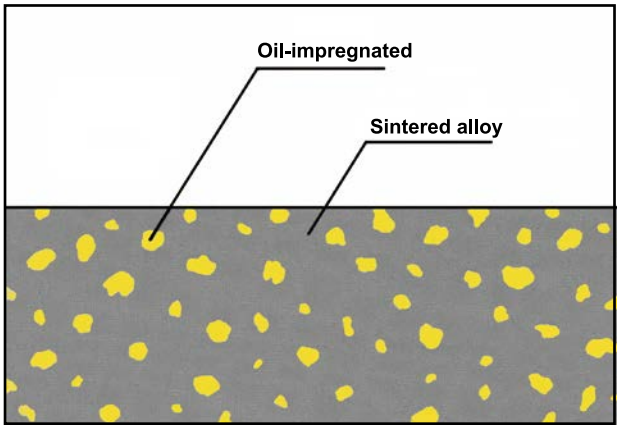

■ Symbols

Functions

Dirty Environment	Resistant against contaminated or deteriorated oil
Dusty	Resistant against dusty circumstances
Maintenance-Free	No lubrication or maintenance
Tensile strength index 100%	Tensile strength index (Compared to standard roller chains)
Temperature Range in Use −10℃～100℃	Allowable ambient temperature

Main uses

FOOD — Feed and drive in food processing machines	PACK — Feed and drive in packaging machines	TEXTILE — Feed and drive in textile machines
PRINT — Feed and drive in printing machines	CONVEYOR — Feed and drive in the conveyors and transfer equipment	CANNING — Feed and drive in can conveyors and for painting and drying cans
CONST-RUCTION — Feed and drive in construction machines	HOME APPLIANCE — Feed and drive of home appliances	AGRICULTURE — Drive of agricultural machines

Wide range of product line-up

O-Ring Chain and Sintered Bushing Roller Chain applicable for use under various conditions

Two types of maintenance-free chains

The Ultimate Life Chain Series includes two types of maintenance-free chains, X-ring/O-ring Chain and Sintered Bushing Roller Chain. They can be applied in various conditions from low-speed to high-speed operation, or from low-load to high-load operation as you can see in the chart below.

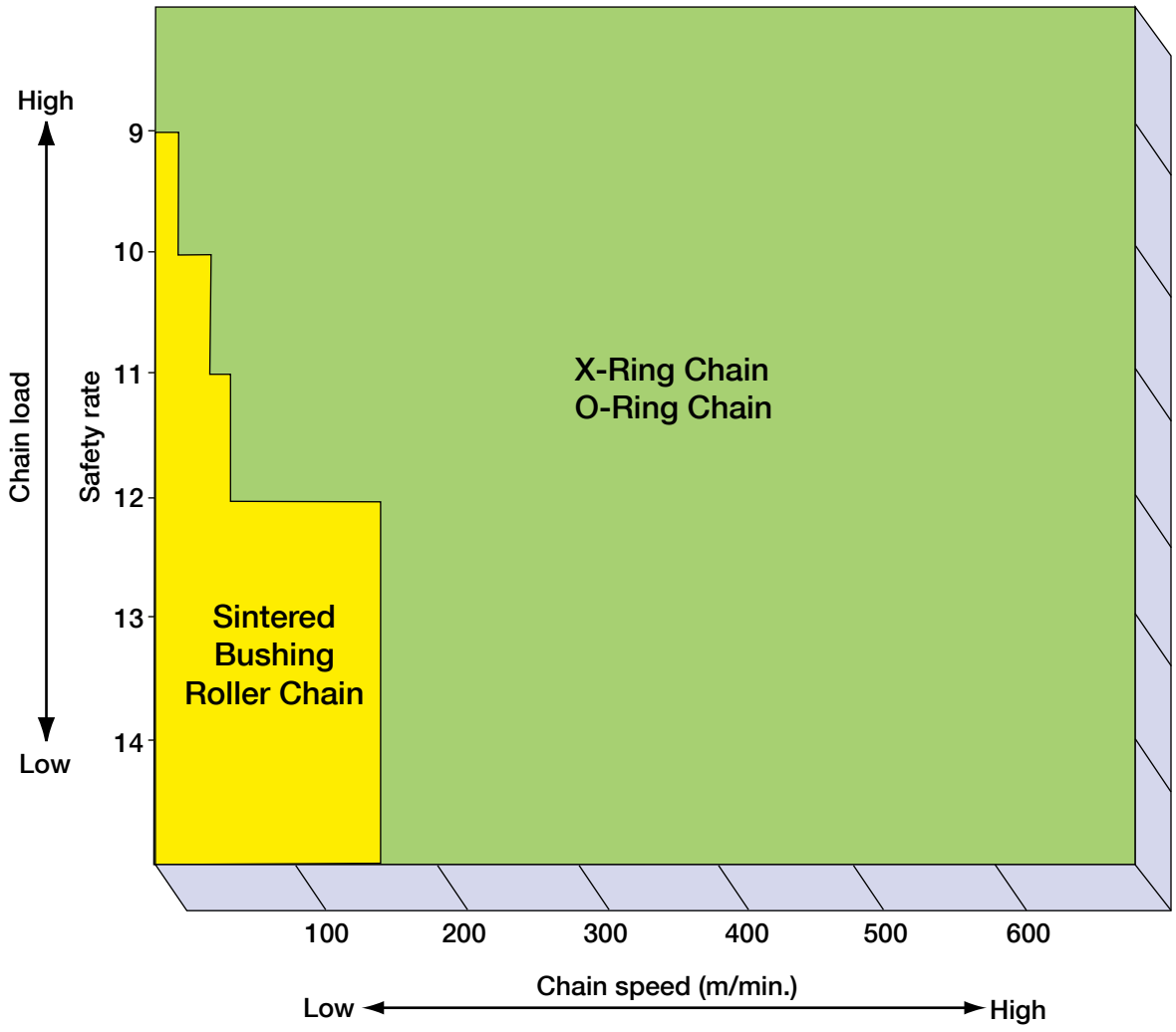

Life Comparison Test

Chain life comparison without lubrication
(Compared with standard roller chain as the bench mark)

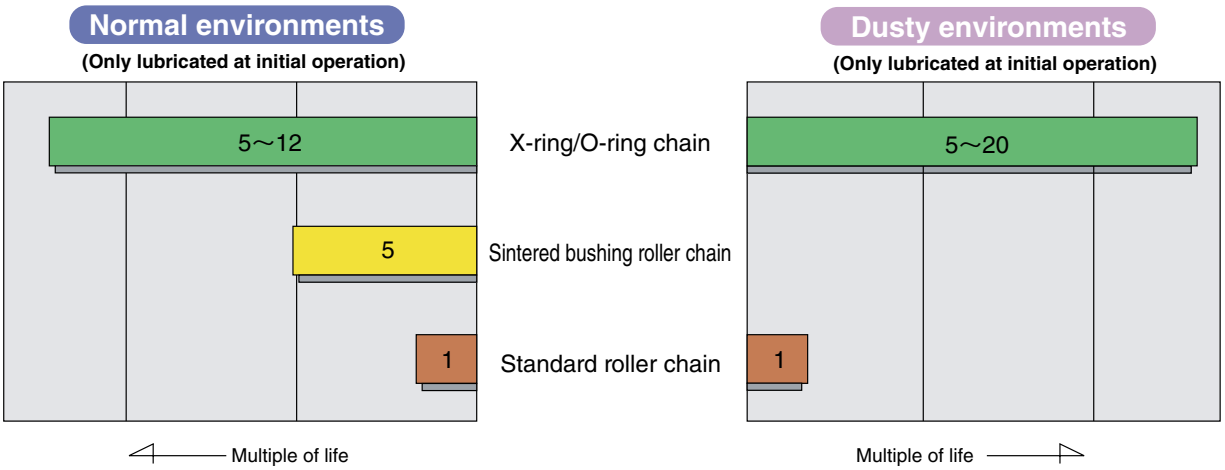

Comparison of oil dust

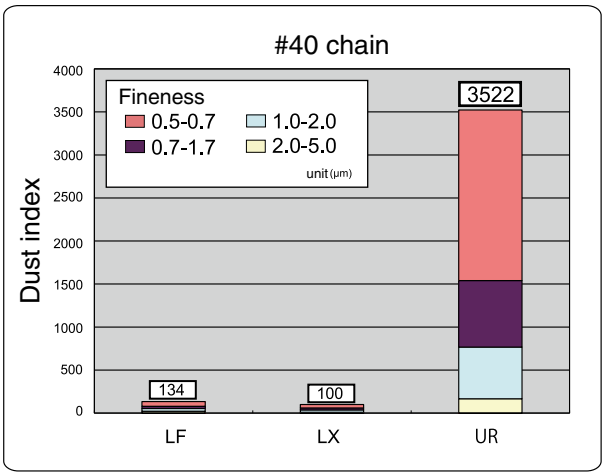

Comparison of dusty visualization data

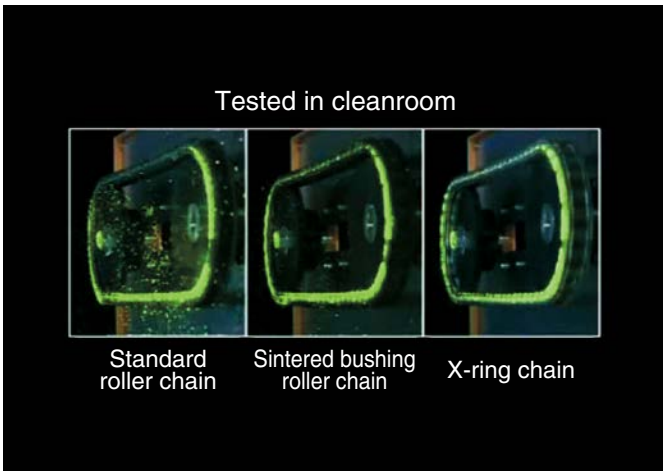

X-Ring Chain (LX)/O-Ring Chain (LD)



Highest wear resistance available by sealing grease between pins and bushings

The durability of chain is dramatically improved since grease is sealed between the pins and bushings by X-ring/O-ring. The X-ring/O-ring chain is the most dependable model of the Ultimate Life Chain Series with its excellent wear resistance even in the conditions or environments where chain maintenance is difficult.

Recommended uses.

- Circumstances where frequent chain replacement is required due to wear stretch.
- Circumstances where lubrication during the service is impossible.
- In an environment with much soil, sand, dust, etc.
- Applications that require strength higher than that of a sintered bushing roller chain.

Other features

- Reducing noise. (The noise level is 3 dB lower compared to standard roller chains.)
- Reducing vibration with the friction created by O-Ring. (The power loss due to the friction is almost negligible, since the frictional force between the pins and bushings is for usually in the applications.)

Wear resistance performance

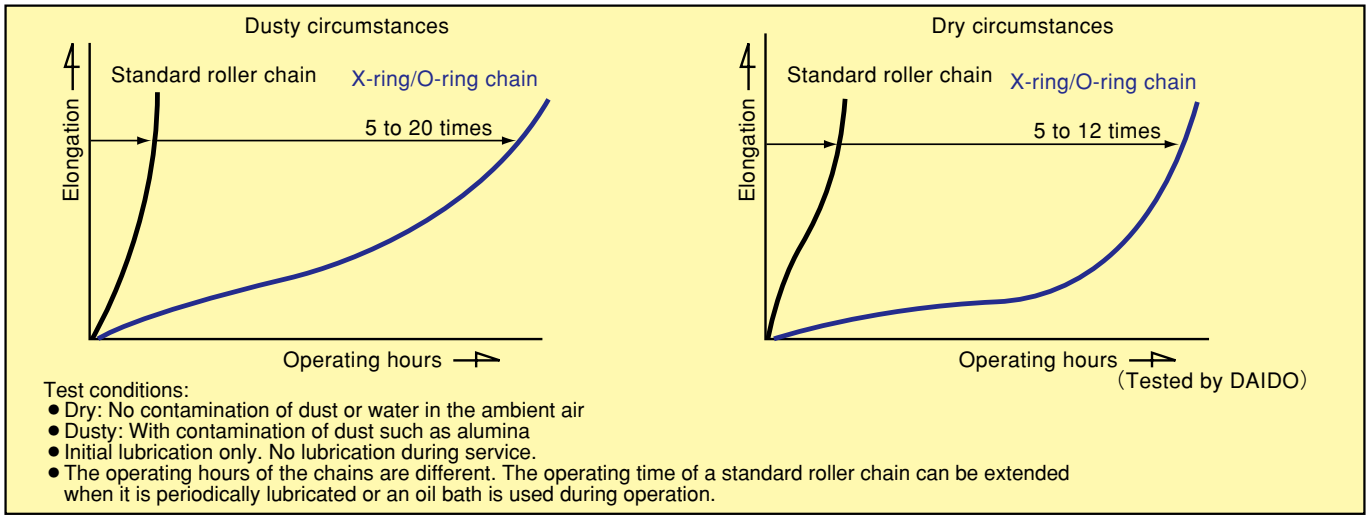

Test conditions:
- Dry: No contamination of dust or water in the ambient air
- Dusty: With contamination of dust such as alumina
- Initial lubrication only. No lubrication during service.
- The operating hours of the chains are different. The operating time of a standard roller chain can be extended when it is periodically lubricated or an oil bath is used during operation.

※ LX: Temp. -10°C~120°C, LD: Temp. -10°C~80°C

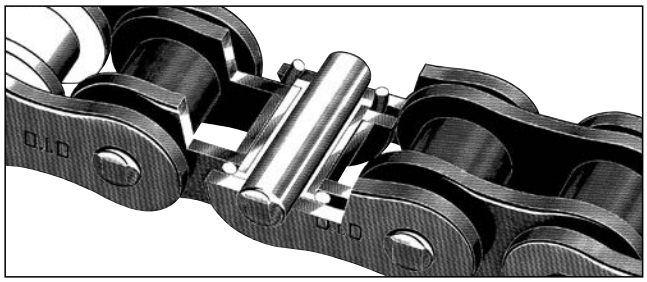

Selection of chains

The strength of an X-ring/O-ring is almost the same as that of a standard roller chain. (Since the pins are longer than those of standard roller chain, the average rupture strength is slightly lower.)
For selecting a suitable chain, refer to "Selection of Chains" (P122~125).
When the service ambient temperature is higher than 80 °C, special heat resistant seal rings must be used. In this case, contact us for more information.

Connecting links and offset links

Two types of connecting links are available: clearance fit and interference fit. When high strength or durability is required, use interference-fit connecting link. Only 2POJ is available as the offset link for all sizes.

Chain No.	Connecting link		Offset link
	Clearance fit	Interference fit	
DID 35LD	RJ (D clip type)	FJ (D clip type)	2POJ (2 pitch offset link)
DID 40LX DID 50LX DID 60LX	RJ (M clip type)	FJ (M clip type)	
DID 80LD DID 100LD	CJ (Cotter pin type)	HJ (Cotter pin type)	
DID 120LD	———		
DID 140LD DID 160LD DID 200LD DID 240LD	———	NJ (Cotter pin type with nut)	

Sprockets

X-ring/O-ring chain uses longer pins than a standard roller chain. When using multiplex X-ring/O-ring chain, the standard sprocket for multiplex chains cannot be used.

Caution

X-ring/O-ring chain is not recommended in applications where solvents or other substances may attack “Nitric Rubber”.
Special material of seal rings are also available for these conditions: Please consult us for details. In general, “Nitric Rubber” is damaged by contact with the following chemical materials.

Gasoline, Light oil, Benzene, Toluene, Trichloroethylene, Ether, Ketone (MEK), Ethyl acetate, Phosphoric acid, Ester hydraulic oil, Organic acid, High-concentration inorganic acid

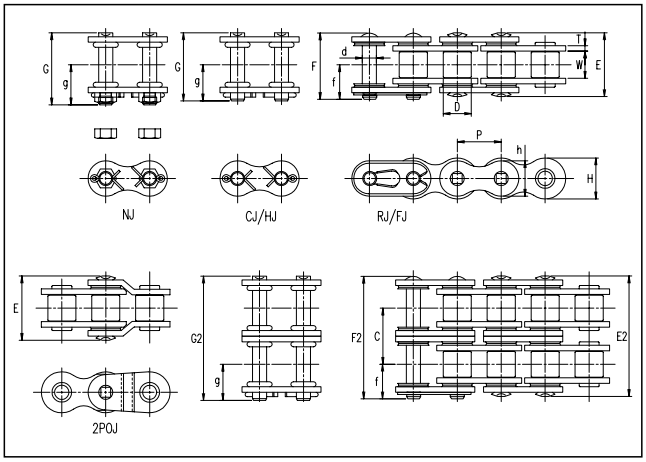

Dimensions

Unit (mm)

Chain No.	Pitch	Roller link width	Roller (Bush) dia.	Pin									Transverse Pitch	Plate			Avg. tensile strength		Max. allowable load		Approx. weight
	P	W	D	d	E	F	G	f	g	E2	F2	G2	C2	T	H	h	kN	kgf	kN	kgf	(kg/m)
* DID 35 LD	9.525	4.60	(5.08)	3.59	13.0	14.45	—	7.8	—	—	—	—	—	1.25	9.0	7.75	9.8	990	1.47	150	0.35
DID 40 LX	12.70	7.95	7.92	3.97	20	20	—	10.7	—	36.7	36.8	—	16.7	1.5	12.0	10.4	18.1	1,840	3.72	380	0.67
DID 50 LX	15.875	9.53	10.16	5.09	23.4	23.9	—	12.8	—	43.7	44.2	—	20.3	2.0	15.0	13.0	30.1	3,060	6.86	700	1.08
DID 60 LX	19.05	12.70	11.91	5.96	29.2	30.0	—	16.0	—	54.9	55.7	—	25.7	2.4	18.1	15.6	42.8	4,350	9.31	950	1.62
DID 80 LD	25.40	15.88	15.88	7.94	36.5	—	38.5	—	20.9	69.4	—	71.3	32.8	3.2	24.0	20.6	72.5	7,360	14.7	1,490	2.83
DID 100 LD	31.75	19.05	19.05	9.54	44.0	—	46.2	—	24.7	83.6	—	85.7	39.5	4.0	29.9	26.0	107	10,860	21.1	2,140	4.07
DID 120 LD	38.10	25.40	22.23	11.11	54.0	—	56.8	—	30.2	—	—	—	—	4.8	35.9	31.2	157	15,940	28.4	2,880	5.90
DID 140 LD	44.45	25.40	25.40	12.71	58.6	—	69.2	—	40.2	—	—	—	—	5.6	41.9	36.3	196	19,900	40.2	4,080	7.87
DID 160 LD	50.80	31.75	28.58	14.29	69.0	—	80.3	—	46.2	—	—	—	—	6.4	47.8	41.4	245	24,870	52.9	5,370	10.31
DID 200 LD	63.50	38.10	39.68	19.85	83.8	—	96.5	—	55.0	—	—	—	—	8.0	60.0	52.0	428	43,450	73.5	7,460	16.89
DID 240 LD	76.20	47.63	47.63	23.81	101.2	—	116.4	—	66.2	—	—	—	—	9.5	71.5	62.0	624	63,350	99	10,050	24.80

Note: 1. Those marked with * indicate bushing chain.
2. The values of average tensile strength and maximum allowable load are for chains.
3. When grooving using sprockets with smaller number of teeth, the grooves may interfere with the chain outer plate. Consult us for advise.
4. LX-type has a less-friction by using specially formed X-rings.

BS X-Ring Roller Chain

【DID 08BLX, 50LX［10BLX］, 12BLX, 16BLX】

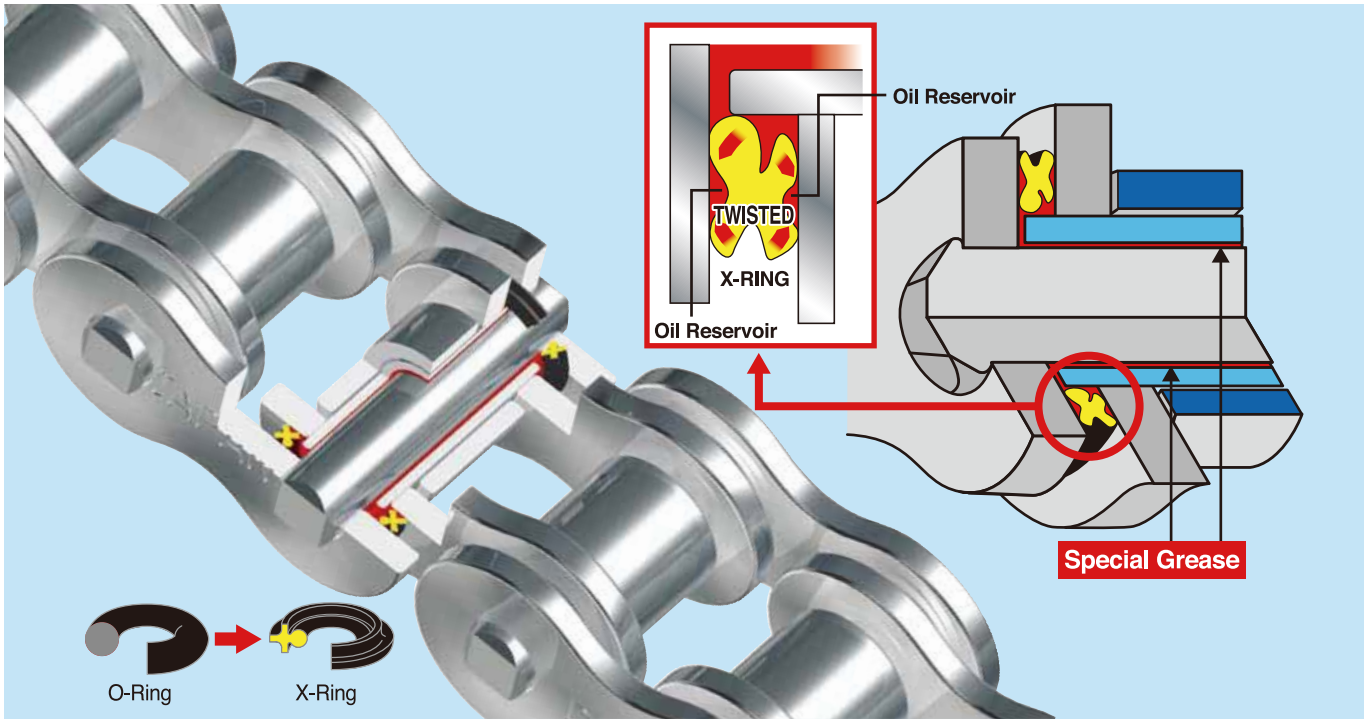

FRICTION CHART

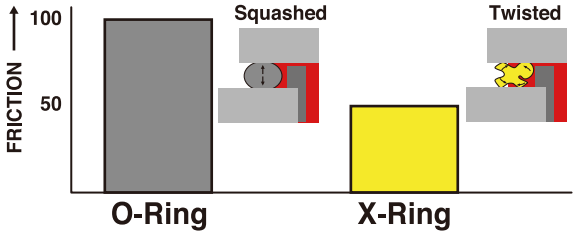

● Lowest in Friction

DID's X-ring construction reduce friction drastically by twisting the ring between side plates.

● Less Vibration

● Reducing Noise

WEAR RESISTANCE CHART

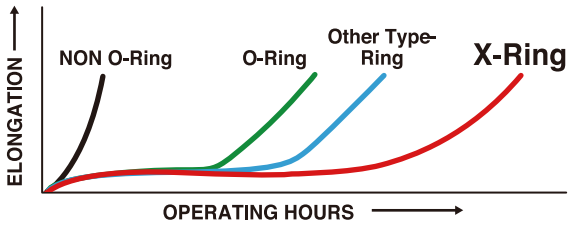

● Longest Chain Life Ever!

Patented X-ring's outstanding grease sealing performance double the wear life compared to conventional sintered bushing chain.

● Great Cost Saving

Saving in operational and maintenance costs by increasing chain life.

Available Sizes

Chain Size

#08B, #10B(#50), #12B & #16B

Size 50LX can be used as substitute for 10BLX

Seal Ring Type

X-Ring

Connecting Links & Offset Links

Connecting links

Clearance fit/ Semi-Press fit Clip type

Offset Links

2 Pitch Offset Link only

Surface Treatment

Can be Nickel Plated.

Sprocket

Single strand chain can be used on standard sprocket however multi-strands chain cannot be used on standard sprockets.

Sprocket with an extremely small number of teeth may not be applicable. Please contact us for detail.

Caution

Do not use seal chain in application where solvents or other substances may attack the X-Ring seal.

Dimensions

Standard Attachment

Chain No.	Connecting Link		Offset Link
	Clearance fit	Interference fit	
DID 08BLX	RJ	FJ	2P OJ 2 pitch style only
DID 50LX〔10BLX〕	RJ	FJ	
DID 12BLX	RJ	FJ	
DID 16BLX	RJ	FJ	

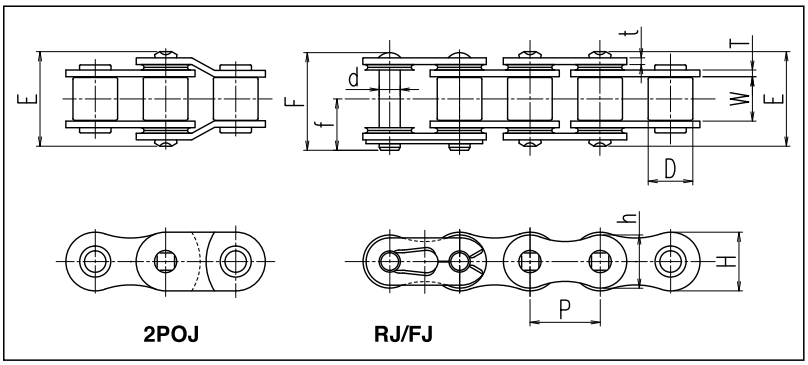

Chain

Chain No.	Pitch	Inner link Inner width	Roller dia.	Pin				Plate				Min. Tensile strength	Max. allowable load	Approx. weight
	P	W	D	d	E	F	f	T	t	H	h	kN	kN	(kg/m)
DID 08BLX	12.7	7.75	8.51	4.45	18.75	19.55	10.28	1.5	1.5	11.9	10.4	17.20	3.92	0.76
DID 50LX〔10BLX〕	15.875	9.53	10.16	5.09	23.4	23.90	12.8	2.0	2.0	15.0	13.0	24.51	6.86	1.08
DID 12BLX	19.05	11.68	12.07	5.72	25.80	26.60	14.10	1.8	1.8	16.1	14.6	28.90	5.58	1.42
DID 16BLX	25.40	17.02	15.88	8.29	39.00	39.95	20.53	4.0	3.2	21.0	21.0	60.80	12.80	2.96

※E of 16BLX 2POJ is 40.6.
※50LX and 10BLX can be used on same sprockets.

Fit X-Ring Chain (LF)



Special X-Ring Chain equivalent to JIS/ANSI standard dimension

JIS/ANSI standard sprockets and guide rail can be used for even multiplex. Attachments also can be designed using same dimensions as JIS/ANSI standard.
Fit X-Ring Chain (LF) can extend life of chain dramatically from your currently using JIS/ANSI roller chain.

Recommended uses.

- Circumstances where frequent chain replacement is required due to wear stretch.
- Circumstances where lubrication during the service is impossible.

Other features

- Reducing noise. (The noise level is 3 dB lower compared to standard roller chains.)
- Reducing vibration with the friction created by X-Rings. (The power loss due to the friction is almost negligible, since the frictional force between the pins and bushings is for usually in the applications.)
- Wear resistance performance is equivalent to Standard X-Ring Chain (LX).
- Nickel plating and Washing to prevent oil splash are available if necessary.

Comparison of Chain width

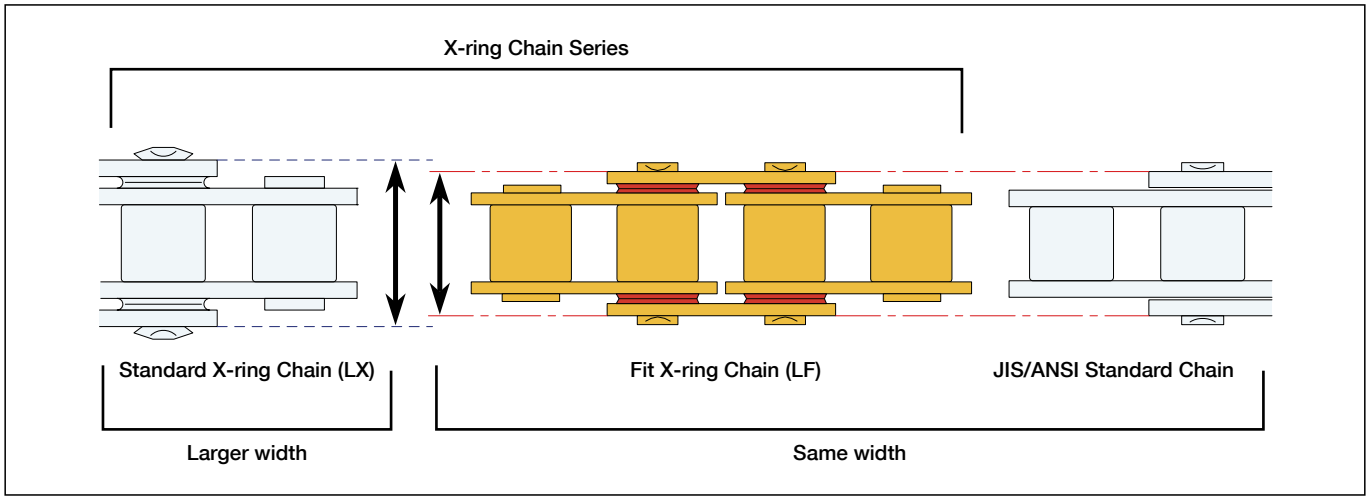

Selection of chains

The strength of an X-ring chain is almost the same as that of a standard roller chain. (Since the pins are longer than those of standard roller chain, the average rupture strength is slightly lower.)
For selecting a suitable chain, refer to "Selection of Chains" (P122~125).
In case tensile strength of the chain or load on the attachment is close to the limit when conveyor use, please contact us.

Connecting links and offset links

Two types of connecting links are available: clearance fit and interference fit. When high strength or durability is required, use interference-fit connecting link. Only 2POJ is available as the offset link for all sizes.

Sprockets

JIS/ANSI standard sprocket can be used, even for multiplex.

Caution

X-ring chain is not recommended in applications where solvents or other substances may attack “Nitric Rubber”. Special material X-ring are also available for these conditions: Please consult us for details. In general, “Nitric Rubber” is damaged by contact with the following chemical materials.

Gasoline, Light oil, Benzene, Toluene, Trichloroethylene, Ether, Ketone (MEK), Ethyl acetate, Phosphoric acid, Ester hydraulic oil, Organic acid, High-concentration inorganic acid

Dimensions

Unit (mm)

Chain No.	Pitch	Roller link width	Roller dia.	Pin				Plate			Avg. tensile strength	Max. allowable load	Approx. weight (kg/m)
	P	W	D	d	E	F	f	T	H	h	kN	kN	
DID 40 LF	12.70	7.95	7.92	3.97	16.5	17.6	9.5	1.25	12.0	10.4	18.1	3.72	0.58
DID 50 LF	15.875	9.53	10.16	5.09	20.3	21.9	11.6	1.50	15.0	13.0	30.1	6.86	0.92
DID 60 LF	19.05	12.70	11.91	5.96	25.4	26.9	14.3	1.80	18.1	15.6	42.8	9.31	1.37

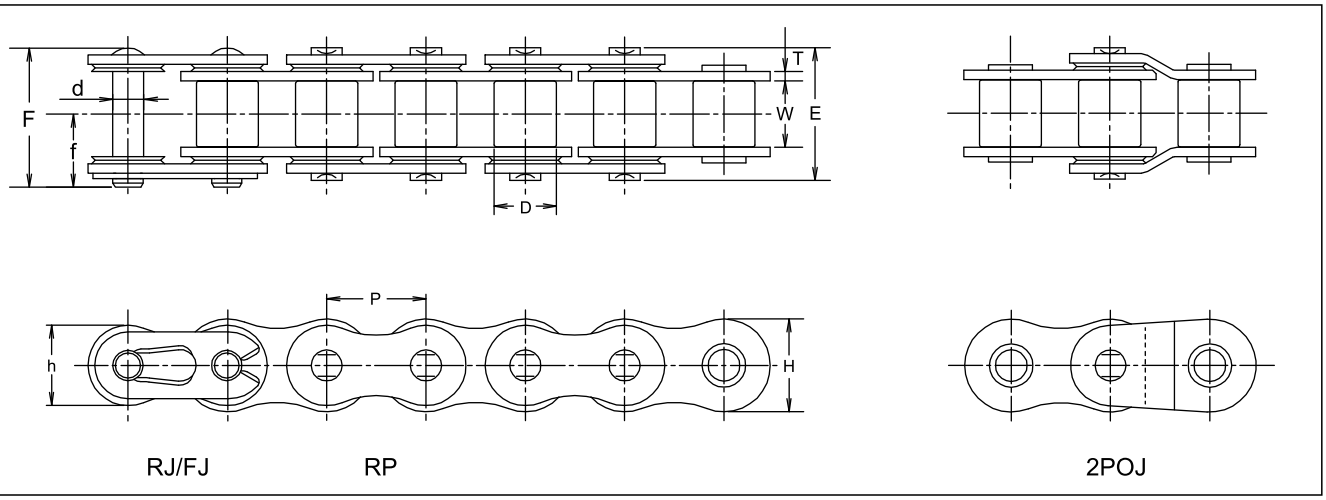

Sintered Bushing Roller Chain (UR/ URN)



Maintenance free chains using sintered alloy bushings

Sintered bushing roller chain is maintenance-free chain suitable to a place where lubrication is difficult. It uses bushings made of a sintered alloy which impregnates lubricating oil.
For the use that requires clean appearance, rustless type (URN) is available.

Recommended uses

- Circumstances where lubrication is difficult or elongation of chain frequently occurs.

Remarks for use

- Don't use this chain in dusty environments. In such environments, use O-ring chains.
- This chain is for the use under light or medium load. Use O-ring chain when a large impact is applied to a chain.
- Set the chain feeding speed at 150m/min. or lower.

Wear resistance performance

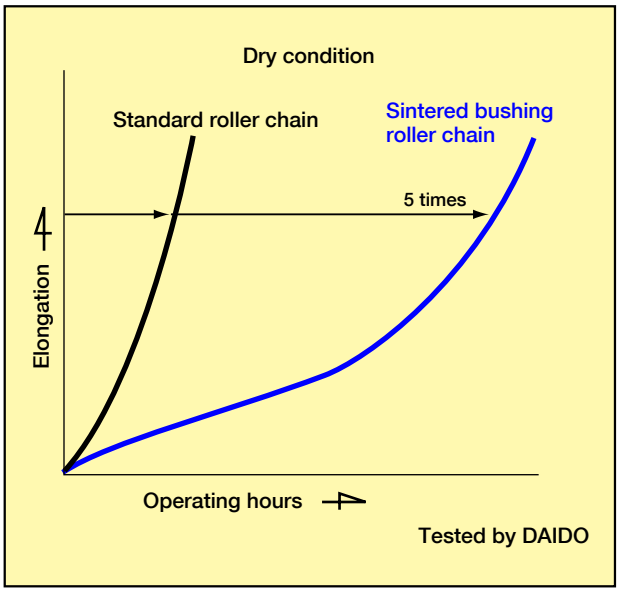

Selection of chains

As for sintered bushing roller chains, the inner plates are thicker and the pins are longer than those of standard roller chains in order to compensate for the strength lowered by the use of sintered bushings.
For selecting a suitable chain, refer to "Selection of Chains" (P122~125). Use the tables of maximum kilowatt ratings for sintered bushing roller chains that cover low speed ranges (P76~79).
For sintered bushing roller chains, "Low-speed selection" cannot be used since the "Maximum allowable load" in the dimension table considers only the chain tensile tension and neglects the bushing strength.

Connecting links and offset links

For sintered bushing roller chain, RJ type connecting links are used for DID60 or smaller, and CJ type connecting links for DID80 or larger.
OJ can be used as offset links. Please place an order the connecting links and offset links specifying the type for sintered bushing roller chain.
In the tables of maximum kilowatt ratings, the strength of the connecting links and offset links are taken into account.

Sprockets

Standard sprockets can be used for sintered bushing roller chains.

Sectional view of sintered alloy

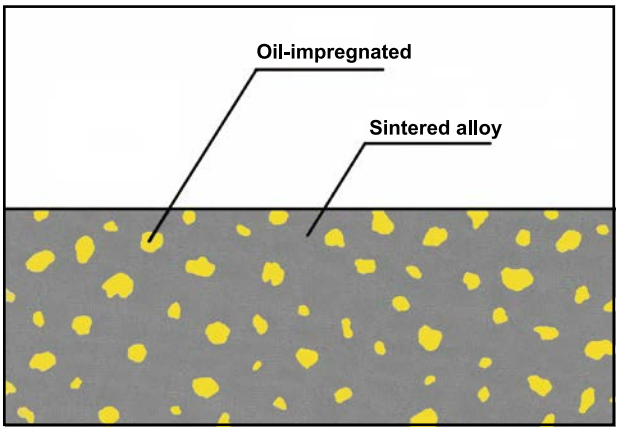

DID 40UR, 40URN

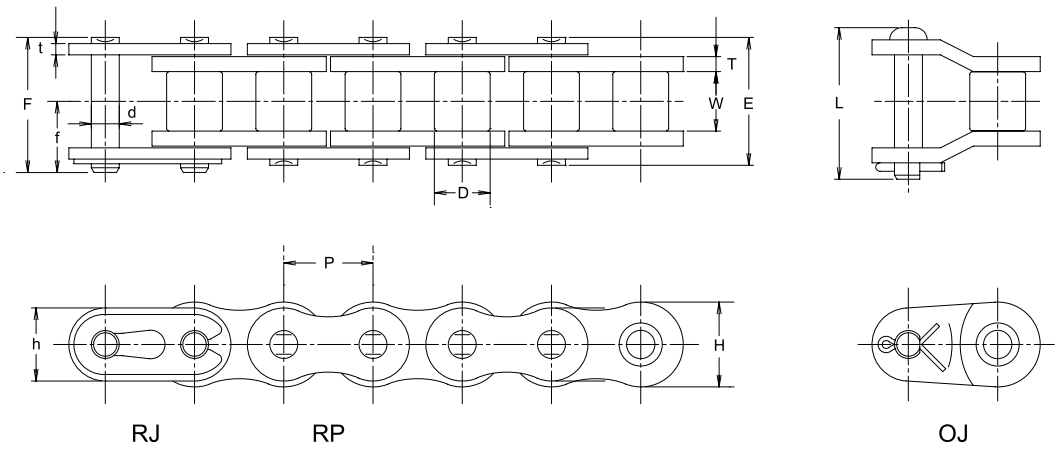

Dimensions

Unit (mm)

Chain No.	Pitch	Roller link width	Roller dia.	Pin					Plate				Avg. tensile strength		Max. allowable load		Approx. weight
	P	W	D	d	E	F	f	L	T	t	H	h	kN	kgf	kN	kgf	(kg/m)
DID 40UR, URN	12.70	7.95	7.92	3.97	17.7	19.0	10.2	21.2	2.0	1.5	12.0	10.4	17.8	1,810	3.72	380	0.69

Note: The values of average tensile strength and maximum allowable load are for chains.

Max. Kilowatt Ratings DID 40UR, 40URN

Unit(kW)

N. T	Small sprocket rpm (r/min)																			
	10	20	30	50	70	90	100	150	200	300	400	500	600	700	800	900	1000	1100	1200	1300
9	0.04	0.07	0.10	0.16	0.22	0.27	0.30	0.43	0.56	0.81	1.05	1.28	1.51	1.74	1.96	2.18	2.40	2.27	1.99	1.76
10	0.04	0.08	0.11	0.18	0.25	0.31	0.34	0.49	0.63	0.91	1.18	1.44	1.70	1.95	2.20	2.44	2.69	2.65		
11	0.05	0.09	0.13	0.20	0.27	0.34	0.37	0.54	0.70	1.01	1.30	1.60	1.88	2.16	2.44	2.71	2.98			
12	0.05	0.10	0.14	0.22	0.30	0.37	0.41	0.59	0.77	1.11	1.43	1.75	2.06	2.37	2.67	2.97				
13	0.06	0.11	0.15	0.24	0.33	0.41	0.45	0.65	0.84	1.21	1.56	1.91	2.25	2.59	2.92	3.24				
14	0.06	0.11	0.16	0.26	0.35	0.44	0.49	0.70	0.91	1.31	1.69	2.07	2.44	2.80	3.16					
15	0.07	0.12	0.18	0.28	0.38	0.48	0.52	0.75	0.98	1.41	1.82	2.23	2.63	3.02						
16	0.07	0.13	0.19	0.30	0.41	0.51	0.56	0.81	1.05	1.51	1.96	2.39	2.82	3.24						
17	0.08	0.14	0.20	0.32	0.44	0.55	0.60	0.86	1.12	1.61	2.09	2.55	3.01							
18	0.08	0.15	0.22	0.34	0.46	0.58	0.64	0.92	1.19	1.71	2.22	2.72	3.20							
19	0.09	0.16	0.23	0.36	0.49	0.62	0.68	0.97	1.26	1.82	2.35	2.88	3.39							
20	0.09	0.17	0.24	0.38	0.52	0.65	0.71	1.03	1.33	1.92	2.49	3.04								
21	0.09	0.18	0.25	0.40	0.55	0.69	0.75	1.09	1.41	2.03	2.62	3.21								
22	0.10	0.19	0.27	0.42	0.57	0.72	0.79	1.14	1.48	2.13	2.76	3.37								
23	0.10	0.20	0.28	0.45	0.60	0.76	0.83	1.20	1.55	2.23	2.89	3.54								
24	0.11	0.20	0.29	0.47	0.63	0.79	0.87	1.25	1.62	2.34	3.03									
25	0.11	0.21	0.31	0.49	0.66	0.83	0.91	1.31	1.70	2.44	3.17									
28	0.13	0.24	0.35	0.55	0.75	0.93	1.03	1.48	1.92	2.76	3.58									
30	0.14	0.26	0.37	0.59	0.80	1.01	1.11	1.60	2.07	2.98										
32	0.15	0.28	0.40	0.64	0.86	1.08	1.19	1.71	2.22	3.19										
35	0.16	0.31	0.44	0.70	0.95	1.19	1.31	1.88	2.44	3.52										
40	0.19	0.35	0.51	0.81	1.10	1.37	1.51	2.18	2.82											

Note: The drive performance (kilowatt ratings) of sintered bushing chains is obtained on the basis of approx. 1,000 hour endurance time.

DID 50UR, 50URN

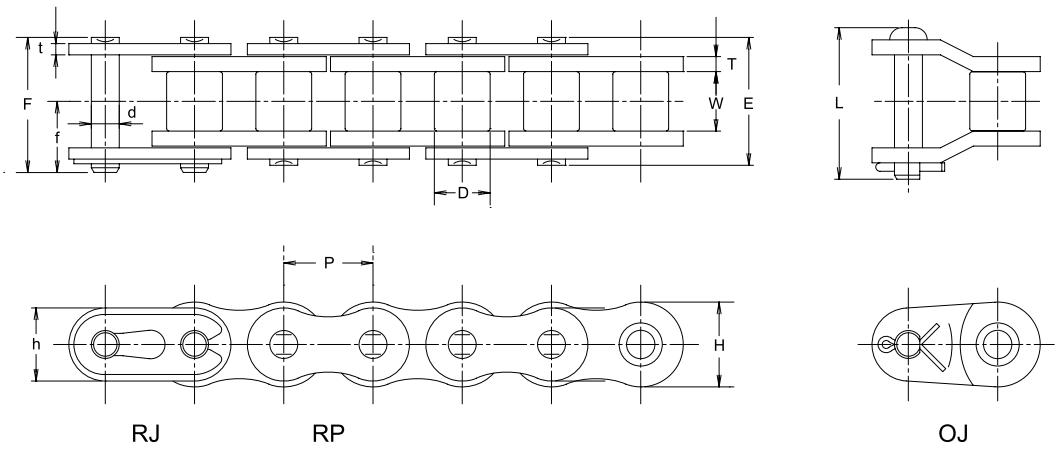

Dimensions

Unit (mm)

Chain No.	Pitch	Roller link width	Roller dia.	Pin					Plate				Avg. tensile strength		Max. allowable load		Approx. weight
	P	W	D	d	E	F	f	L	T	t	H	h	kN	kgf	kN	kgf	(kg/m)
DID 50UR, URN	15.875	9.53	10.16	5.09	21.2	22.8	12.3	25.0	2.4	2.0	15.0	13.0	29.9	3,040	6.86	700	1.09

Note: The values of average tensile strength and maximum allowable load are for chains.

DID 50UR, 50URN (kW Ratings)

Unit(kW)

N. T	Small sprocket rpm (r/min)																			
	10	20	30	50	70	90	100	150	200	250	300	350	400	450	500	600	700	800	900	1000
9	0.09	0.17	0.24	0.39	0.53	0.66	0.72	1.04	1.35	1.65	1.95	2.23	2.52	2.80	3.08	3.63	4.17	4.37	3.66	3.12
10	0.10	0.19	0.27	0.43	0.59	0.74	0.81	1.17	1.51	1.85	2.18	2.50	2.82	3.14	3.45	4.07	4.67	5.11	4.29	
11	0.11	0.21	0.30	0.48	0.65	0.82	0.90	1.29	1.68	2.05	2.42	2.78	3.13	3.48	3.83	4.51	5.18	5.84		
12	0.12	0.23	0.33	0.53	0.72	0.90	0.99	1.42	1.84	2.25	2.65	3.05	3.44	3.82	4.20	4.95	5.69			
13	0.14	0.25	0.36	0.58	0.78	0.98	1.08	1.55	2.01	2.46	2.89	3.32	3.75	4.17	4.58	5.40	6.20			
14	0.15	0.27	0.39	0.63	0.85	1.06	1.17	1.68	2.18	2.66	3.14	3.60	4.06	4.52	4.96	5.85				
15	0.16	0.30	0.43	0.67	0.91	1.14	1.26	1.81	2.34	2.87	3.38	3.88	4.38	4.87	5.35	6.30				
16	0.17	0.32	0.46	0.72	0.98	1.23	1.35	1.94	2.51	3.07	3.62	4.16	4.69	5.22	5.74					
17	0.18	0.34	0.49	0.77	1.04	1.31	1.44	2.07	2.68	3.28	3.87	4.44	5.01	5.57	6.12					
18	0.19	0.36	0.52	0.82	1.11	1.39	1.53	2.20	2.86	3.49	4.11	4.72	5.33	5.92	6.51					
19	0.20	0.38	0.55	0.87	1.18	1.48	1.62	2.34	3.03	3.70	4.36	5.01	5.65	6.28						
20	0.22	0.40	0.58	0.92	1.24	1.56	1.71	2.47	3.20	3.91	4.61	5.29	5.97	6.64						
21	0.23	0.42	0.61	0.97	1.31	1.64	1.81	2.60	3.37	4.12	4.86	5.58	6.29							
22	0.24	0.45	0.64	1.02	1.38	1.73	1.90	2.74	3.55	4.34	5.11	5.87	6.62							
23	0.25	0.47	0.67	1.07	1.45	1.81	1.99	2.87	3.72	4.55	5.36	6.16	6.94							
24	0.26	0.49	0.71	1.12	1.51	1.90	2.09	3.01	3.90	4.76	5.61	6.45								
25	0.27	0.51	0.74	1.17	1.58	1.98	2.18	3.14	4.07	4.98	5.86	6.74								
28	0.31	0.58	0.83	1.32	1.79	2.24	2.47	3.55	4.60	5.62	6.63									
30	0.33	0.62	0.90	1.42	1.93	2.42	2.66	3.83	4.96	6.06	7.14									
32	0.36	0.67	0.96	1.53	2.07	2.59	2.85	4.10	5.32	6.50										
35	0.40	0.74	1.06	1.68	2.28	2.85	3.14	4.52	5.86	7.16										
40	0.46	0.85	1.23	1.94	2.63	3.30	3.62	5.22	6.76											

Note: The drive performance (kilowatt ratings) of sintered bushing chains is obtained on the basis of approx. 1,000 hour endurance time.

DID 60UR, 60URN

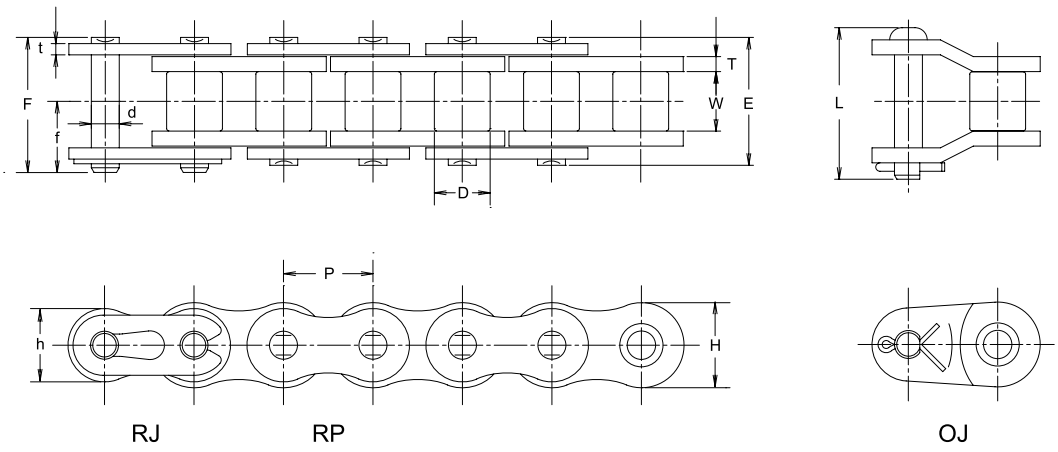

Dimensions

Unit (mm)

Chain No.	Pitch	Roller link width	Roller dia.	Pin					Plate				Avg. tensile strength		Max. allowable load		Approx. weight
	P	W	D	d	E	F	f	L	T	t	H	h	kN	kgf	kN	kgf	(kg/m)
DID 60UR, URN	19.05	12.70	11.91	5.96	27.2	28.9	15.8	33.1	3.2	2.4	18.1	15.6	42.1	4,270	9.31	950	1.71

Note: The values of average tensile strength and maximum allowable load are for chains.

DID 60UR, 60URN (kW Ratings)

Unit(kW)

N. T	Small sprocket rpm (r/min)																			
	10	20	30	50	70	90	100	150	200	250	300	350	400	450	500	550	600	650	700	800
9	0.14	0.27	0.38	0.61	0.82	1.03	1.13	1.63	2.11	2.58	3.04	3.49	3.94	4.38	4.81	5.24	5.67	6.10	6.17	5.05
10	0.16	0.30	0.43	0.68	0.92	1.15	1.27	1.83	2.36	2.89	3.41	3.91	4.41	4.91	5.39	5.88	6.36	6.83	7.23	
11	0.18	0.33	0.48	0.75	1.02	1.28	1.40	2.02	2.62	3.20	3.78	4.34	4.89	5.44	5.98	6.51	7.04	7.57	8.09	
12	0.19	0.36	0.52	0.83	1.12	1.40	1.54	2.22	2.88	3.52	4.15	4.76	5.37	5.97	6.57	7.16	7.74	8.32		
13	0.21	0.40	0.57	0.90	1.22	1.53	1.68	2.42	3.14	3.84	4.52	5.19	5.86	6.51	7.16	7.80	8.44			
14	0.23	0.43	0.62	0.98	1.32	1.66	1.82	2.62	3.40	4.16	4.90	5.63	6.35	7.06	7.76	8.45				
15	0.25	0.46	0.66	1.05	1.42	1.79	1.96	2.83	3.66	4.48	5.28	6.06	6.84	7.60	8.36					
16	0.27	0.49	0.71	1.13	1.53	1.91	2.11	3.03	3.93	4.80	5.66	6.50	7.33	8.15						
17	0.28	0.53	0.76	1.20	1.63	2.04	2.25	3.24	4.19	5.13	6.04	6.94	7.83	8.70						
18	0.30	0.56	0.81	1.28	1.73	2.17	2.39	3.44	4.46	5.45	6.43	7.38	8.32							
19	0.32	0.60	0.86	1.36	1.84	2.31	2.53	3.65	4.73	5.78	6.81	7.83	8.83							
20	0.34	0.63	0.91	1.44	1.94	2.44	2.68	3.86	5.00	6.11	7.20	8.27								
21	0.36	0.66	0.96	1.51	2.05	2.57	2.82	4.07	5.27	6.44	7.59	8.72								
22	0.37	0.70	1.00	1.59	2.15	2.70	2.97	4.28	5.54	6.77	7.98	9.17								
23	0.39	0.73	1.05	1.67	2.26	2.83	3.12	4.49	5.81	7.11	8.37									
24	0.41	0.77	1.10	1.75	2.37	2.97	3.26	4.70	6.09	7.44	8.77									
25	0.43	0.80	1.15	1.83	2.47	3.10	3.41	4.91	6.36	7.78	9.16									
28	0.48	0.91	1.30	2.06	2.79	3.50	3.85	5.55	7.19	8.79										
30	0.52	0.98	1.40	2.22	3.01	3.77	4.15	5.98	7.75	9.47										
32	0.56	1.05	1.51	2.38	3.23	4.05	4.45	6.41	8.30											
35	0.62	1.15	1.66	2.63	3.56	4.46	4.90	7.06	9.15											
40	0.71	1.33	1.92	3.03	4.11	5.15	5.66	8.16												

Note: The drive performance (kilowatt ratings) of sintered bushing chains is obtained on the basis of approx. 1,000 hour endurance time.

DID 80UR, 80URN

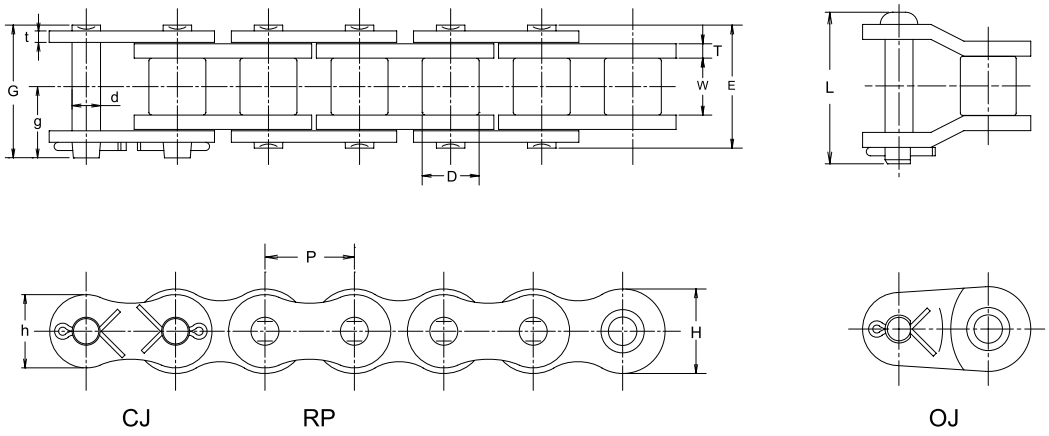

Dimensions

Unit (mm)

Chain No.	Pitch	Roller link width	Roller dia.	Pin					Plate				Avg. tensile strength		Max. allowable load		Approx. weight
	P	W	D	d	E	G	g	L	T	t	H	h	kN	kgf	kN	kgf	(kg/m)
DID 80UR, URN	25.40	15.88	15.88	7.94	34.2	37.1	20.0	39.7	4.0	3.2	24.0	20.8	77	7,820	14.7	1,490	2.80

Note: The values of average tensile strength and maximum allowable load are for chains.

DID 80UR, 80URN (kW Ratings)

Unit(kW)

N. T	Small sprocket rpm (r/min)																					
	10	20	30	40	50	60	70	80	90	100	120	140	160	180	200	250	300	400	450	500	550	600
9	0.35	0.64	0.93	1.20	1.47	1.73	1.99	2.24	2.49	2.74	3.23	3.71	4.19	4.65	5.12	6.25	7.37	9.55	10.62	11.67	11.16	9.79
10	0.39	0.72	1.04	1.35	1.65	1.94	2.23	2.51	2.79	3.07	3.62	4.16	4.69	5.21	5.73	7.01	8.26	10.70	11.89	13.08	13.07	
11	0.43	0.80	1.15	1.49	1.82	2.15	2.47	2.79	3.10	3.41	4.01	4.61	5.20	5.78	6.35	7.77	9.15	11.86	13.18	14.50		
12	0.47	0.88	1.27	1.64	2.00	2.36	2.71	3.06	3.40	3.74	4.41	5.06	5.71	6.35	6.98	8.53	10.05	13.03	14.48			
13	0.51	0.96	1.38	1.79	2.19	2.58	2.96	3.34	3.71	4.08	4.81	5.52	6.23	6.92	7.61	9.30	10.96	14.20	15.79			
14	0.56	1.04	1.50	1.94	2.37	2.79	3.21	3.61	4.02	4.42	5.21	5.98	6.74	7.50	8.25	10.08	11.88	15.39				
15	0.60	1.12	1.61	2.09	2.55	3.01	3.45	3.89	4.33	4.76	5.61	6.44	7.27	8.08	8.88	10.86	12.80					
16	0.64	1.20	1.73	2.24	2.74	3.22	3.70	4.18	4.64	5.10	6.01	6.91	7.79	8.66	9.52	11.64	13.72					
17	0.69	1.28	1.84	2.39	2.92	3.44	3.95	4.46	4.96	5.45	6.42	7.38	8.32	9.25	10.17	12.43	14.65					
18	0.73	1.36	1.96	2.54	3.11	3.66	4.20	4.74	5.27	5.80	6.83	7.85	8.85	9.84	10.82	13.22	15.58					
19	0.77	1.44	2.08	2.69	3.29	3.88	4.46	5.03	5.59	6.14	7.24	8.32	9.38	10.43	11.47	14.02	16.52					
20	0.82	1.53	2.20	2.85	3.48	4.10	4.71	5.31	5.91	6.49	7.65	8.79	9.91	11.02	12.12	14.82						
21	0.86	1.61	2.32	3.00	3.67	4.32	4.97	5.60	6.23	6.85	8.07	9.27	10.45	11.62	12.78	15.62						
22	0.91	1.69	2.44	3.16	3.86	4.55	5.22	5.89	6.55	7.20	8.48	9.75	10.99	12.22	13.43	16.42						
23	0.95	1.77	2.56	3.31	4.05	4.77	5.48	6.18	6.87	7.55	8.90	10.22	11.53	12.82	14.09	17.23						
24	1.00	1.86	2.68	3.47	4.24	4.99	5.74	6.47	7.19	7.91	9.32	10.71	12.07	13.42	14.76							
25	1.04	1.94	2.80	3.62	4.43	5.22	6.00	6.76	7.52	8.26	9.74	11.19	12.62	14.03	15.42							
28	1.18	2.19	3.16	4.09	5.01	5.90	6.78	7.64	8.50	9.34	11.01	12.64	14.26	15.85	17.43							
30	1.27	2.36	3.41	4.41	5.39	6.35	7.30	8.23	9.15	10.06	11.86	13.62	15.36	17.08								
32	1.36	2.53	3.65	4.73	5.78	6.81	7.83	8.83	9.81	10.79	12.71	14.61	16.47	18.31								
35	1.50	2.79	4.02	5.21	6.37	7.51	8.62	9.72	10.81	11.89	14.01	16.09	18.14									
40	1.73	3.23	4.65	6.02	7.36	8.67	9.96	11.23	12.49	13.73	16.18	18.59										

Note: The drive performance (kilowatt ratings) of sintered bushing chains is obtained on the basis of approx. 1,000 hour endurance time.

Applicable for many different environments

	Nickel Plated Chain (N)	Hi-Guard Chain (E)	Double Guard Chain (WG)
Name			
Features	①Special nickel plated finish. ②Where brilliance and cleanliness are required. ③Strong corrosion resistance (highly resistant to salt water spray ard acid atmophere).	①High corrosion resistant film coating. ②Where long periods of seasonal inactivity create need for orotection against indoor or out. ③Outstanding resistance to rusting or corrosion, particularly in salt water environments.	①Rust protection "twice as tough" as DID Hi-Guard Chain. ②Amazing performance in acidic and alkaline atmospheres. ③The tensile strength and working load is the same as ANSI standard chain and makes the downsizing possible where stainless steel chain is used.
Functions	Corrosive Atmosphere, Moisture, Salt Water, Alkaline Environment, Allowable Load 100%	Corrosive Atmosphere, Moisture, Salt Water, Allowable Load 100%, Temperature Range in Use -10°C~80°C	Corrosive Atmosphere, Moisture, Salt Water, Alkaline Environment, Acidic Environment, Allowable Load 100%, Temperature Range in Use -10°C~80°C
Main uses	TEXTILE, CONVEYOR※1, FOOD, CHEMICALS, PRINT, PARKING	TEXTILE, CONVEYOR, PARKING, WATER TREATMENT, OUTDOOR, CONST-RUCTION	TEXTILE, CONVEYOR, PARKING, WATER TREATMENT※2, OUTDOOR, CONST-RUCTION, FOOD※2, CHEMICALS※2

■ Environment Resistant Series: Chain No. and Codes

Chain No.	Nickel Plated	HI-Guard	Double Guard	Stainless Steel			Low Temperature
				SUS304	SUS600 Series	X-Ring	
DID 25	N	-	-	SS	-	-	-
DID 35	N	E	-	SS	-	-	-
DID 41	N	-	-	-	-	-	-
DID 40	N	E	WG	SS	SSK	SSLT	TK
DID 50	N	E	WG	SS	SSK	SSLT	TK
DID 60	N	E	WG	SS	SSK	SSLT	TK
DID 80	N	E	WG	SS	SSK	SSLT	TK
DID 100	N	E	-	SS	SSK	-	TK
DID 120	N	E	-	SS	SSK	-	TK
DID 140	N	-	-	SS	-	-	TK
DID 160	N	-	-	SS	-	-	TK
DID 180	-	-	-	-	-	-	-
DID 200	-	-	-	SS	-	-	-
DID 240	-	-	-	-	-	-	-

	Stainless Steel Chain (SS)	Stainless Steel Chain (SSK)	Stainless Steel Chain SN Treatment	Stainless Steel X-Ring Chain (SSLT)	Low Temperature (TK)
Name					
Features	①SUS304 ②Where chains is exposed to chemicals, water and high temperature. ③The best resistance to corrosion and heat.	①SUS304 (plate) + SUS631 (pin/bushing/roller). ②Where chain is exposed to chemicals, water and high temperature. ③1.5 times higher max allowable load than SS type.	①Excellent wear resistance for stainless steel chain. ②Same corrosion resistance as SUS600.	①Up to 10 times greater wear resistance performance compared to standard stainless steel chain. ②Great cost saving can be achieved through longer life and less down time. ③The patented X-ring design provides great sealing performance at half the friction of standard O-ring.	①Using material suitable for low temperature and specialized grease ②Suitable for circumstances where temperatures drop down to -40 °C. ③Excellent low temperature strength
Functions	Corrosive Atmosphere, Moisture, Salt Water, Alkaline Environment, Acidic Environment, Clean Areas, Temperature Range in Use -10°C~400°C, Allowable Load 10%	Allowable Load 15%	Allowable Load 25%	Corrosive Atmosphere, Moisture, Salt Water, Alkaline Environment, Acidic Environment, Clean Areas, Dirty Environment, Dusty, Maintenance-Free, Great Savings, Allowable Load 10%, Temperature Range in Use -10°C~200°C	Corrosive Atmosphere, Alkaline Environment, Temperature Range in Use -40°C~80°C, Allowable Load 100%
Main uses	CONVEYOR, FOOD, CHEMICALS, WATER TREATMENT			CONVEYOR, FOOD, CHEMICALS, WATER TREATMENT	PACK, CONVEYOR, FOOD, CONST-RUCTION

Symbols

Functions

- Corrosive Atmosphere — Resistant against corrosive gas (by CASS test)
- Moisture, Salt Water — Resistant against rain, moisture or sea water
- Alkaline Environment — Resistant against alkali liquid
- Acidic Environment — Resistant against acid liquid
- Clean Areas — Suitable for circumstances required hygiene
- Temperature Range in Use -40°C~400°C — Allowable ambient temperature
- Allowable Load 100% — Allowable tension index (Compared to standard roller chains)
- Dirty Environment — Resistant against contaminated or deteriorated oil
- Maintenance-Free — No lubrication or maintenance
- Dusty — Resistant against dusty circumstances
- Great Savings $ — Running cost and maintenance cost can be saved

Main uses

- PACK — Feed and drive in packaging machines
- TEXTILE — Feed and drive in textile machines
- CONVEYOR — Feed and drive in the conveyors and transfer equipment
- FOOD — Feed and drive in food processing machines
- CHEMICALS — Feed and drive in chemicals facilities
- PRINT — Feed and drive in printing machines
- PARKING — Feed and drive in multilevel parking machines
- WATER TREATMENT — Feed and drive in water treatment equipment
- OUTDOOR — Feed and drive in outdoor equipment
- CONST-RUCTION — Feed and drive in construction machines
- CHEMICALS — Feed and drive in medical facilities

※1. Consult us when you use chains for hoisting.
※2. Consult us when you use chains for these particular uses.

Nickel Plated Chain (N)



Specialized nickel plating for a neat and clean appearance and corrosion resistance

The surface of Rustless Chains is nickel plated for an appealing exterior and corrosion resistance. It will exhibit excellent corrosion resistance especially when used in combination with grease lubrication. You can expect the effect to delay hydrogen brittle destruction when used in circumstances where chains are exposed to sea breeze or acidic sprays.

Features

- The chain is protected even when in use with gilding or alumite machines that emit corrosive steam.
  The effectiveness of rust resistance and corrosion resistance of the nickel plating does not deteriorate even under conditions of high temperature and continues to protect the chain.
- The chain's fine exterior makes it ideal for machines for demonstration.

Recommended uses

- When a clean appearance is preferable
  Food sanitation machines, office machines, textile machines, printing machines, pulp processing machines etc.
- When using in a corrosive environment
  Chemical machines, gilding machines, alumite machines
- When a neat exterior is necessary
  Demonstration machines at exhibitions etc.

Results of CASS test

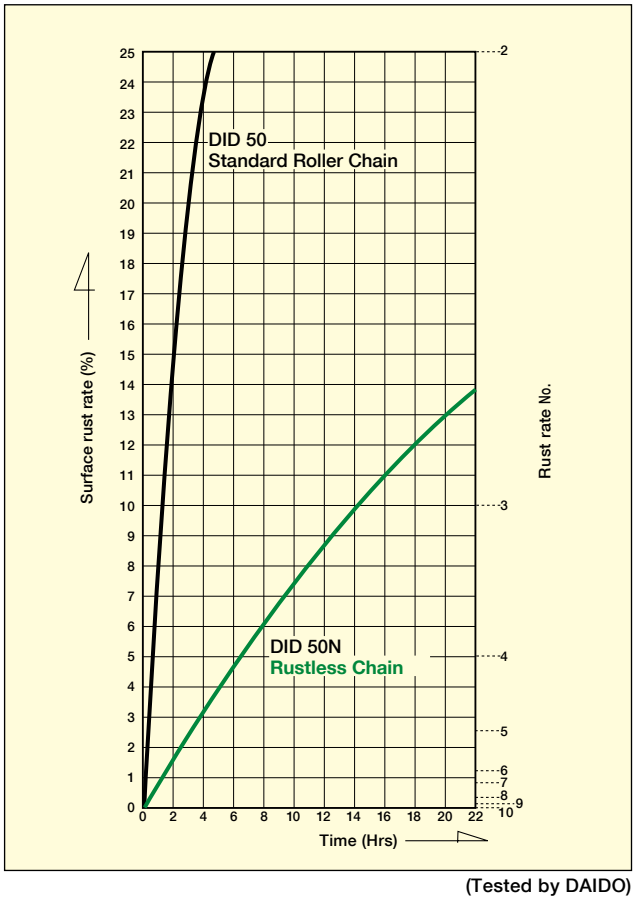

(Tested by DAIDO)

Selection of chains

The strength of Rustless Chain is equivalent with standard roller chains. For chain selection, refer to P122~125.

Connecting links and offset links

RJ type connecting links are used for Rustless Chains #60 or smaller and CJ type connecting links for #80 or larger. We provide 2POJ offset links for sizes #25 and #35, and OJ and 2POJ for all other sizes.

Sprockets

Standard sprockets for Rustless Chains can be used since the dimensions are the same as standard roller chains.

Caution

①Please use stainless steel chains when the chains are to be constantly exposed to water, sea water, liquid solutions or corrosive solutions.
②Unless not so specified by the customer, chains are coated with grease before delivery. Please use the recommended lubricant (p.134) for the maintenance of the chain since lubrication using grease can cause lubrication failure.
③Consult us if the chain is to be used for hoisting applications.
④Please be noticed that the surface layer might come off from sliding part when operation.

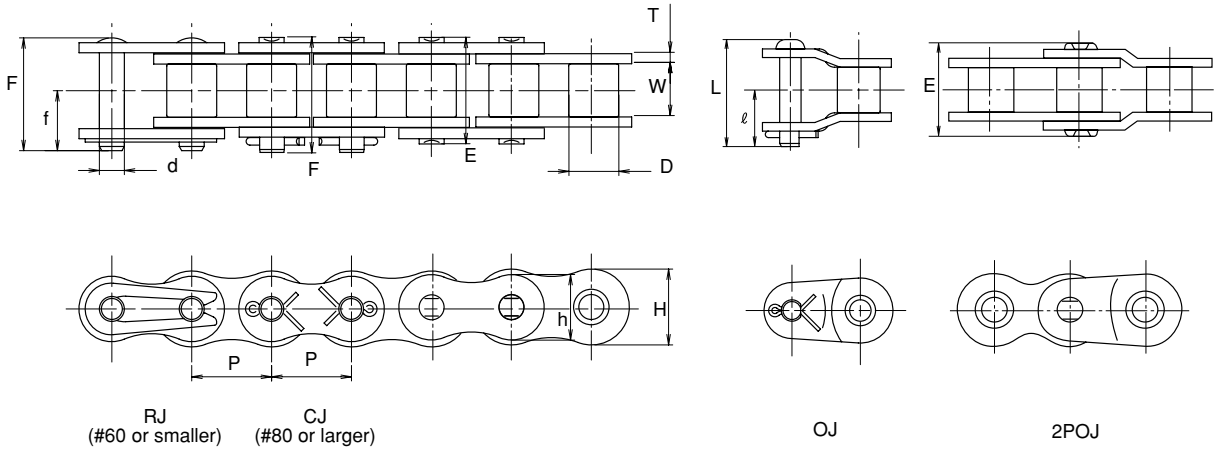

Dimensions

Unit (mm)

Chain No.	Pitch	Roller link width	Roller (Bush) dia.	Pin						Plate			Avg. tensile strength		Max. allowable load		Approx. weight (kg/m)
	P	W	D	d	E	F	f	L	ℓ	T	H	h	kN	kgf	kN	kgf	
* DID 25N	6.35	3.18	(3.30)	2.31	7.8	8.5	4.7	——	——	0.72	5.9	5.20	4.41	450	0.69	70	0.13
* DID 35N	9.525	4.78	(5.08)	3.59	12.0	13.1	7.3	13.9	7.8	1.25	9.0	7.75	11.2	1,140	2.15	220	0.32
DID 41N	12.70	6.38	7.77	3.59	13.7	14.6	7.9	15.3	8.6	1.20	9.6	8.00	10.7	1,090	2.35	240	0.39
DID 40N	12.70	7.95	7.92	3.97	16.5	17.6	9.5	19.3	10.6	1.50	12.0	10.40	19.1	1,940	3.72	380	0.63
DID 50N	15.875	9.53	10.16	5.09	20.3	21.9	11.6	23.1	12.1	2.00	15.0	13.00	30.8	3,130	6.86	700	1.06
DID 60N	19.05	12.70	11.91	5.96	25.4	26.9	14.3	30.0	15.7	2.40	18.1	15.60	44.1	4,480	9.31	950	1.44
DID 80N	25.40	15.88	15.88	7.94	32.6	35.4	19.0	36.4	19.5	3.20	24.0	20.80	78.4	7,960	14.7	1,490	2.55
DID 100N	31.75	19.05	19.05	9.54	39.5	42.5	22.8	43.5	23.5	4.00	29.9	26.00	118	11,980	22.5	2,280	3.79
DID 120N	38.10	25.40	22.23	11.11	49.7	53.0	28.2	54.1	28.2	4.80	35.9	31.20	166	16,850	30.4	3,090	5.49
DID 140N	44.45	25.40	25.40	12.71	53.6	58.4	31.6	59.6	31.7	5.60	41.9	36.30	215	21,830	40.2	4,080	7.11
DID 160N	50.80	31.75	28.58	14.29	63.6	68.2	36.4	69.7	36.5	6.40	47.8	41.40	269	27,310	52.9	5,370	9.82

Note: Those marked with * indicate bushing chains.

Hi-Guard Chain (E)



Highly protective coating that goes far beyond the performance of nickel plating

Hi-Guard Chain has higher corrosion resistance next to stainless steel chains. The surface of the chain is finished in non-gloss white highly protective coating. It has superb resistance to anti-corrosion and rusting. It has equal strength to standard roller chains, and can be used in circumstances where strength higher than that of stainless steel chains is required.



Features

- Since high guard coating acts as a sacrificial anode for the chain, you can expect sufficient corrosion resistance even when the coating has come off to some extent.
- The coating consists of environmentally friendly chromium free material. To comply with the EU's Restriction of Hazardous Substances (RoHS) Directive, hexavalent chromium is not used.

Recommended uses

- Applications require both strength and corrosion resistance.
  Multilevel parking facility, moving decks, cleansing lines etc.
- Conditions exposed to rain or sea water
  Machines installed outside, amusement machines.

Wear resistance

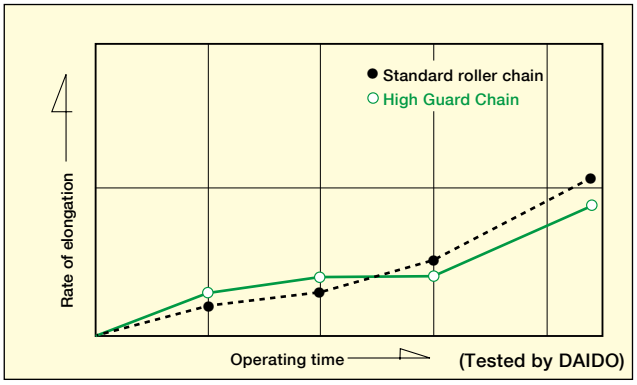

Selection of chains

High Guard Chain has strength equivalent to standard roller chain. Refer to p.122~124 for chain selection.

Connecting links and offset links

RJ type connecting links are used for High Guard Chains #60 or smaller and CJ type connecting links for #80 or larger. 2POJ offset links can be used for sizes #25 and #35, and OJ and 2POJ for all other sizes.

Sprockets

Standard sprockets for High Guard Chains can be used since their dimensions are the same as those of standard roller chains.

Caution

①Use stainless steel chains if the chains come in direct contact with food.
②High Guard Chain does not have a gloss like the plated chain.
③High-guard coating has superb general corrosion resistance, but has poor alkaline and acidic resistance.
④Unless not so specified by the customer, chains are coated with grease before delivery. If possible, lubricate the spaces between pins and bushings and bushes and rollers. Please use the recommended lubricant (p.134) for the maintenance of the chain since lubrication using grease can cause flexion failure.
⑤Please be noticed that the surface layer might come off from sliding part when operation.

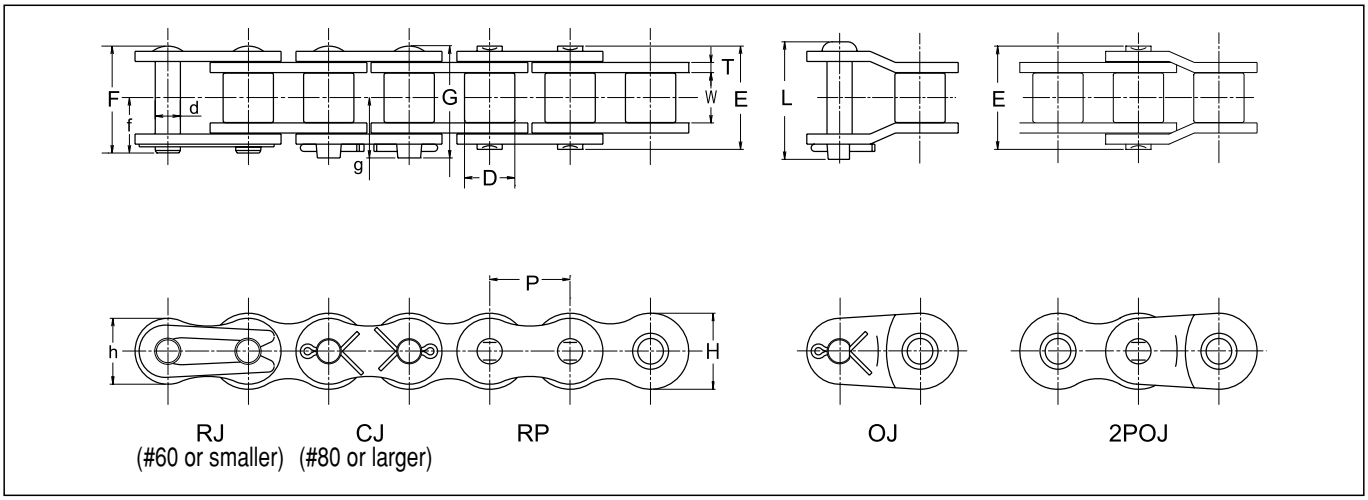

Dimensions

Unit (mm)

Chain No.	Pitch	Roller link width	Roller (Bush) dia.	Pin							Plate			Avg. tensile strength		Max. allowable load		Approx. weight (kg/m)
	P	W	D	d	E	F	G	f	g	L	T	H	h	kN	kgf	kN	kgf	
＊DID 35E	9.525	4.78	(5.08)	3.59	12.0	13.1	—	7.3	—	13.9	1.25	9.0	7.75	10.2	1,040	2.15	220	0.32
DID 40E	12.70	7.95	7.92	3.97	16.5	17.6	—	9.5	—	19.3	1.50	12.0	10.40	16.6	1,690	3.72	380	0.63
DID 50E	15.875	9.53	10.16	5.09	20.3	21.9	—	11.6	—	23.1	2.00	15.0	13.00	28.4	2,880	6.86	700	1.06
DID 60E	19.05	12.70	11.91	5.96	25.4	26.9	—	14.3	—	30.0	2.40	18.1	15.60	40.2	4,080	9.31	950	1.44
DID 80E	25.40	15.88	15.88	7.94	32.6	—	35.4	—	19.0	37.1	3.20	24.0	20.80	75	7,610	14.7	1,490	2.55
DID 100E	31.75	19.05	19.05	9.54	39.5	—	42.5	—	22.7	45.3	4.00	29.9	26.00	112	11,370	22.5	2,280	3.79
DID 120E	38.10	25.40	22.23	11.11	49.7	—	53.0	—	28.2	54.1	4.80	35.9	31.20	157	15,940	30.4	3,090	5.49

Note: 1. Those marked with ＊ indicate bushing chains.
2. Consult us for sizes not included in the chart or multiplex chains.
3. Ask us for the delivery time. Also, consult us for High Guard Chains not included in the chart.

Double Guard Chain (WG)



Steel chain approaching stainless steel chain in corrosion resistance

Double Guard Chain is highly corrosion resistant with coating of double layers of two different materials. Compared to the High-Guard Chain, it exhibits nearly doubled corrosion resistance in the salt water spray test, and can be used in mild alkaline and mild acidic conditions.

Features

- With its improved corrosion resistance, it can be used in circumstances where High-Guard or Rustless Chains cannot be used, and even in some conditions where only stainless steel can be used.
- The coating consists of environmentally friendly non-chrome material. To comply with the EU's Restriction of Hazardous Substances (RoHS) Directive, hexavalent chromium is not used.

Recommended uses

- Conditions that require both strength and corrosion resistance.
  Multilevel parking facility, moving decks, cleansing lines etc.
- Conditions exposed to rain or sea water.
  Machines installed outside, amusement machines.
- Conditions exposed to mild alkaline and mild acidic chemical agents, sea water or wastewater. Various chemical plants and water treatment plants.

Surface conditions after corrosion test

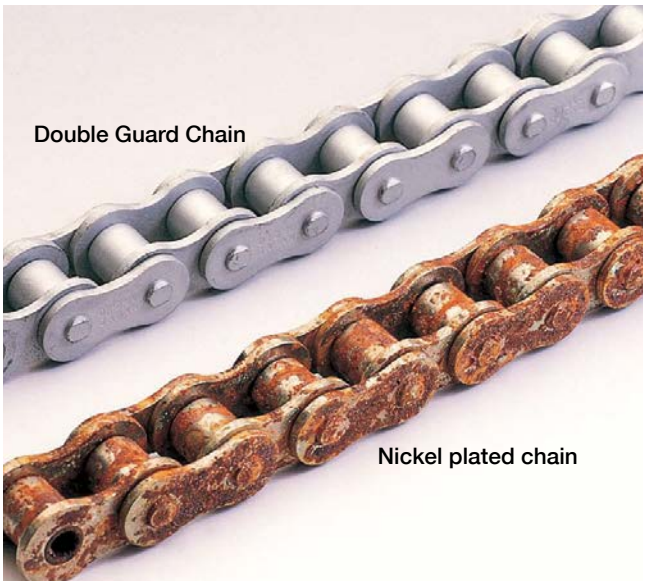

CASS test - Double Guard Chain: 60Hr, Nickel plated chain: 20Hr

Performance Comparison Consult us about the selection of chains depending on your circumstances.

Name	Code	Strength Maximum allowance tension rate	Corrosive resistance			
			General atmosphere (Results of CASS test)	Conditions exposed to water or salt water	Alkaline resistance	Acidic resistance
Double-Guard	WG	100%	◎ (Double of High-Guard)	◎ (Double of High-Guard)	○	△ Resistant to mild acidity (up to PH3)
Hi-Guard	E	100%	○	○	△ (No alkaline resistance)	×
Standard	——	100%	△	× (Rusting)	△	× (Cracking)
Nickel plated	N	100%	○	△	○	△
Stainless steel	SS	10%	◎	◎	◎	◎

Note: ◎: Excellent, ○: Very good, △: Good, ×: No good

Selection of chains

Double Guard Chain has an equivalent strength to a standard roller chain. Please refer to p122~124 for chain selection.

Connecting links and offset links

RJ type connecting links are used for high-guard chains #60 or smaller and CJ type connecting links for #80 or larger, and OJ and 2POJ are used as offset links.

Sprockets

Standard sprockets for high-guard chains can be used since the dimensions are the same as standard roller chains.

Caution

①Use stainless steel chains if the chains will come in direct contact with food.
②Double Guard chain does not have a gloss like the nickel coated chain.
③Unless not so specified by the customer, chains are coated with grease and shipped. If possible, oil the spaces between pins and bushes and bushes and rollers. Please use the recommended lubrication oil (P134) for the maintenance of the chain as oiling with grease can cause flexion failure.
④Please be noticed that the surface layer might come off from sliding part when operation.

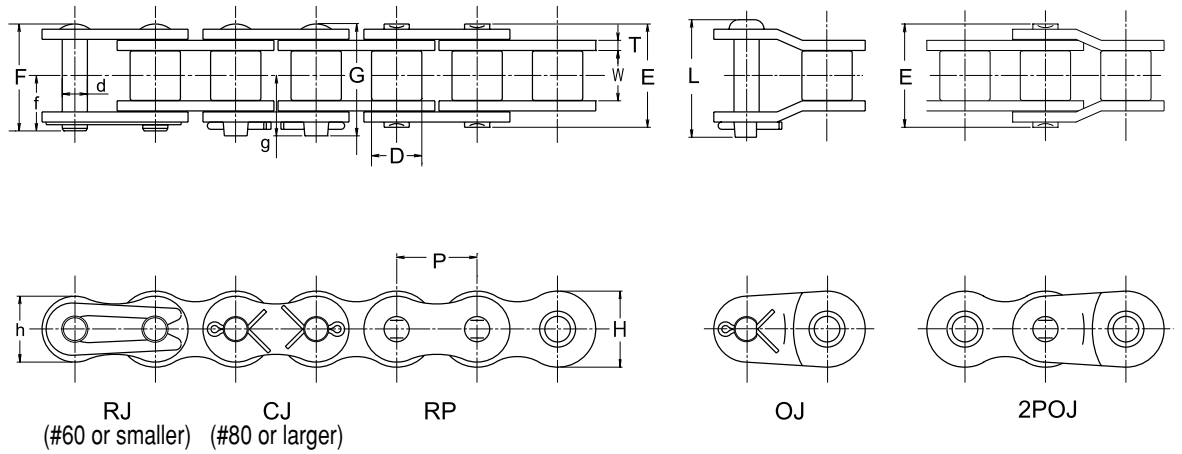

Dimensions

Unit (mm)

Chain No.	Pitch	Roller link width	Roller (Bush) dia.	Pin							Plate			Avg. tensile strength		Max. allowable load		Approx. weight (kg/m)
	P	W	D	d	E	F	G	f	g	L	T	H	h	kN	kgf	kN	kgf	
DID 40WG	12.70	7.95	7.92	3.97	16.5	17.6	—	9.5	—	19.1	1.50	12.0	10.40	16.6	1,690	3.72	380	0.63
DID 50WG	15.875	9.53	10.16	5.09	20.3	21.9	—	11.6	—	23.1	2.00	15.0	13.00	28.4	2,880	6.86	700	1.06
DID 60WG	19.05	12.70	11.91	5.96	25.4	26.9	—	14.3	—	30.0	2.40	18.1	15.60	40.2	4,080	9.31	950	1.44
DID 80WG	25.40	15.88	15.88	7.94	32.6	—	35.4	—	19.0	37.1	3.20	24.0	20.80	75	7,610	14.7	1,490	2.55

Note: Ask us for the delivery time

Stainless Steel Chain (SS/SSK)



Excellent resistance to corrosion and heat that allows use in almost everywhere

There are two types of Stainless Steel Chain: SS and SSK. The SS type has the highest resistance to corrosion and heat. However, it is made entirely of austenite stainless steel and thus its tensile strength is slightly lower than 70% of a standard roller chain, and maximum allowable load drops to a little over 10%.
The SSK type has 1.5 times higher maximum allowable load compared to the SS type. Select SSK when you need more strength than SS, or desire longer product life.
Both types have equivalent corrosion resistance.

Recommended uses

- Conditions exposed to mild alkaline and mild acidic chemical agents, sea water and wastewater. Various chemical plants and water treatment plants.
- Conditions of high temperature
  Heat-treating furnaces, dry furnaces, incinerators

Maximum allowable load (Double pitch)

	Maximum allowable load			
	SS		SSK	
	kN	kgf	kN	kgf
DID C2040SS DID C2042SS	0.44	45	0.69	70
DID C2050SS DID C2052SS	0.69	70	1.03	105
DID C2060HSS DID C2062HSS	1.03	105	1.57	160

Average tensile strength and maximum allowable load (Single pitch)

SS

Chain No.	Average tensile strength		Maximum allowable load	
	kN	kgf	kN	kgf
* **DID 25SS**	3.33	340	0.12	12
* **DID 35SS**	7.55	770	0.26	26
DID 40SS	13.3	1,350	0.44	45
DID 50SS	20.9	2,120	0.69	70
DID 60SS	30	3,050	1.03	105
DID 80SS	53.4	5,420	1.77	180
DID 100SS	82.3	8,360	2.55	259

Note: Those marked with * indicate bushing chains.

SSK

Chain No.	Average tensile strength		Maximum allowable load	
	kN	kgf	kN	kgf
DID 40SSK	13.3	1,350	0.69	70
DID 50SSK	20.9	2,120	1.03	105
DID 60SSK	30	3,050	1.57	159
DID 80SSK	53.4	5,420	2.65	269

Selection of chains

Stainless Steel Chain has lower average tensile strength and maximum allowable load compared to the standard roller chain. Please refer to the maximum allowable load chart in the previous page and p122~124 for chain selection.

Connecting links and offset links

RJ type connecting links are used for Stainless Steel Chains #60 or smaller and CJ type connecting links for #80 or larger. 2POJ offset links are used for sizes #25, and OJ links for all other sizes.

Sprockets

Standard sprockets for Stainless Steel chains can be used since the dimensions are the same as standard roller chains.

Caution

①As a general property of stainless steel, stress corrosion cracking and pitting corrosion can be caused by chlorine and chlorine ion (Cl^-).

②The chart on right shows the data of tests on the level of corrosion resistance for each medium and does not guarantee the performance of the chains. Please take into consideration the conditions, temperature, level and other overall situation when using.

Dimensional Drawing

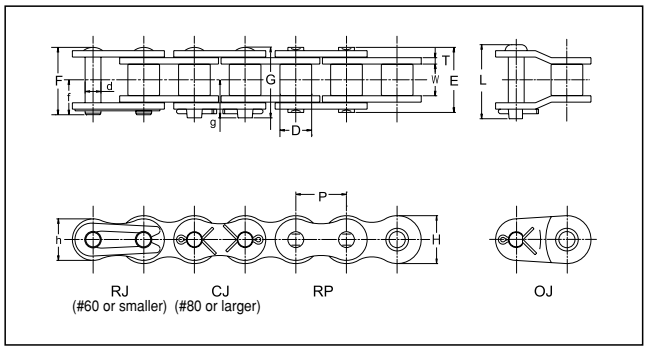

Corrosion resistance

Medium	Standard	Stainless steel
Aceton	×	○
Sulfurous gas (wet)	×	○
Sulfurous gas (dry)	—	○
Ammonia gas (cool)	—	○
Ammonia gas (hot)	×	×
Ammonia water	△	○
Ethanol	○	○
Sodium chloride, salt	×	△
Hydrochloric acid	×	×
Chlorine gas (wet)	×	×
Sea water	×	△
Hydrogen peroxide	×	△
Caustic soda (20%)	×	○
Gasoline	○	○
Potassium permanganate	△	○
Formic acid	×	×
Milk	○	○
Citric acid	×	○
Glycerin	△	○
Acetic acid (10%)	×	○
Bleaching powder, sodium hypochlorite	×	×
Carbon tetrachloride (dry)	△	△
Alcoholic soap	×	△
Oxalic acid (5%)	×	△
Oxalic acid (10%, boiled)	×	×
Nitric acid	×	○
Vinegar	×	△
Calcium hypochlorite	×	×
Baking soda	○	○
Water	×	○
Calcium hydroxide	△	○
Phenic acid, Phenol	×	△
Petroleum	○	○
Soapwater	△	○
Carbonic water	○	○
Sodium carbonate	○	○
Kerosene	○	○
Lactic acid (5%)	×	○
Lactic acid (10%, 65°C)	×	△
Paraffin	○	○
Beer	○	○
Benzene, benzol	○	○
Boric acid (5%)	×	○
Pottasium alum	×	△
Methanol	○	○
Iodine	×	×
Butyric acid	×	△
Sulfuric acid	×	×
Phosphoric acid (10%)	×	△
Sodium sulfate (5%)	△	○
Wine	○	○

Note: 1. ○:Corrosion resistant
△:Corrosion resistant depending on conditions
×: No resistance
2. Unless specified, tests were conducted at 20°C.

Dimensions

Unit (mm)

Chain No.	Pitch	Roller link width	Roller (Bush) dia.	Pin							Plate			Approx. weight (kg/m)
	P	W	D	d	E	F	G	f	g	L	T	H	h	
* DID 25SS	6.35	3.18	(3.30)	2.31	7.65	8.65	—	4.83	—	—	0.75	5.8	5.0	0.14
* DID 35SS	9.525	4.78	(5.08)	3.59	11.55	12.90	—	7.13	—	13.85	1.25	8.8	7.3	0.33
DID 40SS 40SSK	12.70	7.95	7.92	3.97	16.15	17.65	—	9.58	—	19.05	1.50	11.7	10.1	0.63
DID 50SS 50SSK	15.875	9.53	10.16	5.09	20.40	21.80	—	11.60	—	23.05	2.00	14.6	12.6	1.04
DID 60SS 60SSK	19.05	12.70	11.91	5.96	25.40	26.90	—	14.20	—	29.55	2.40	17.5	15.0	1.50
DID 80SS 80SSK	25.40	15.88	15.88	7.94	32.30	—	35.40	—	19.25	37.10	3.20	23.0	19.7	2.62
DID 100SS	31.75	19.05	19.05	9.54	40.40	—	43.35	—	23.15	44.05	4.00	28.9	24.8	4.09

Note: Those marked with * indicate bushing chains.

SN Treatment Chain (SN)



Stainless steel chain with wear resistance performance as high as Carbon steel chain

Features

- SN chain has the same strength as that of regular carbon steel chain thanks to the heat treatment over 13Cr stainless steel (SUS400 series).
- SN also provides unique surface treatment, which can be expected to have the same corrosion resistant performance as SUS600.
- SN treatment forms hardening layer, resulting in better wear resistance.

Recommended uses

- All applications where stainless steel chains are currently used.
- All applications where having corrosion issues with carbon steel and coating chains.
- Better allowable load & wear resistance are required compared to common stainless steel (SUS304) chain.

Wear resistance performance

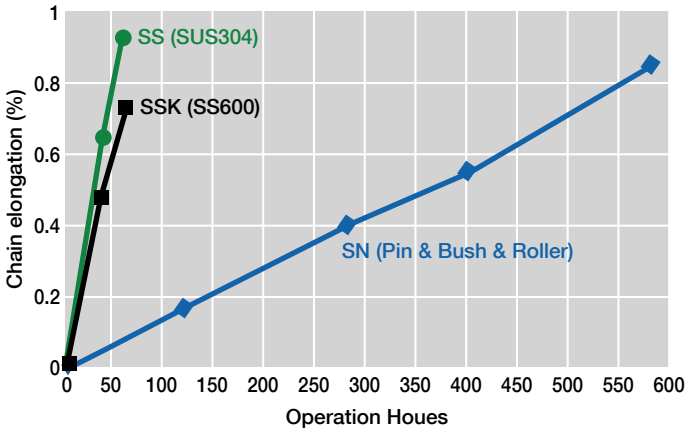

SN Roller Chain Line-up

	Pin	Bushing	Roller	Plate
DID 40	○	○	○	SUS304
DID 50	○	○	○	SUS304
DID 60	○	○	○	SUS304
DID 80	○	○	○	SUS304

- SN Chain comes with plates in 18Cr SUS304 Stainless Steel as standard. (No SN treatment available for plate right now)
- Can be combined with other coating such as Hi-Guard
- Consult with factory for other sizes and attachment

Avg. tensile strength, Max. allowable load and Max. allowable Temp.

Chain No.	Average tensile strength		Max allowable load		Max allowable Temp.
	kN	kgf	kN	kgf	
DID 40 SN	13.3	1,350	1.1	110	400℃ (752℉)
DID 50 SN	20.9	2,120	1.73	170	
DID 60 SN	30	3,050	2.58	260	
DID 80 SN	53.4	5,420	4.43	450	

Performance comparison to other stainless Steel Chain

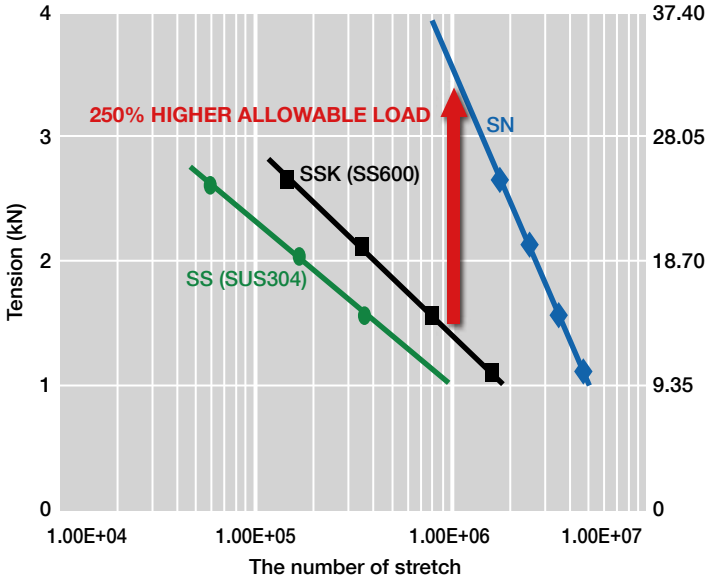

	SUS304 series (SS)	SUS600 series (SSK)	SN
Material	18Cr Stainless Steel	17Cr Stainless Steel	13Cr Stainless Steel
	No Heat Treatment	Heat Treatment	Special Heat Treatment
Tensile strength	100%	100%	100%
Max. allowable Load	100%	150%	250% (Est.)
Corrosion resistance	◎	○	○
Wear resistance	△	○	◎
Cost	◎	○	○

CASS Testing Results (after 168 hours)

SN treatment was provided over pin, bushing and roller.
All plates were 18Cr SUS304.

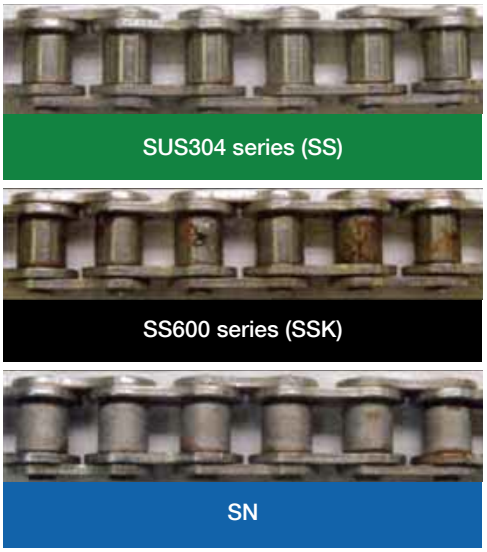

Dimensional Drawing

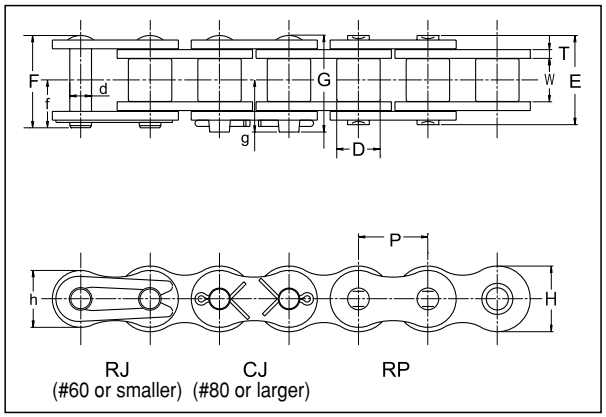

Dimensions

Unit (mm)

Chain No.	Pitch	Roller link width	Bush Dia.	Pin							Plate			Approx. weight (kg/m)
	P	W	D	d	E	F	G	L	f	g	T	H	h	
DID 40 SN	12.70	7.95	7.92	3.97	16.5	17.6	18.1	19.1	9.5	10.1	1.50	11.7	10.1	0.63
DID 50 SN	15.875	9.53	10.16	5.09	20.3	21.9	22.1	23.2	11.6	12.1	2.00	14.6	12.6	1.06
DID 60 SN	19.05	12.70	11.91	5.96	25.4	26.9	27.9	29.8	14.3	15.1	2.40	17.5	15.0	1.53
DID 80 SN	25.40	15.88	15.88	7.94	32.6	——	35.4	37.1	——	19.0	3.20	23.0	19.7	2.55

Stainless Steel X-Ring Chain



Stainless Steel Chains with the features of environment resistant and wear resistant chain series. With the use of X-rings, durability improved remarkably.

X rings were added to the Stainless Steel Chain (SS) that has the best resistance to corrosion and heat. Compared to the conventional Stainless Steel Chain, this chain has about 5~10 times resistance to abrasion. This improvement makes possible a large reduction in the running and maintenance costs.

Wear resistance of Stainless Steel Chain

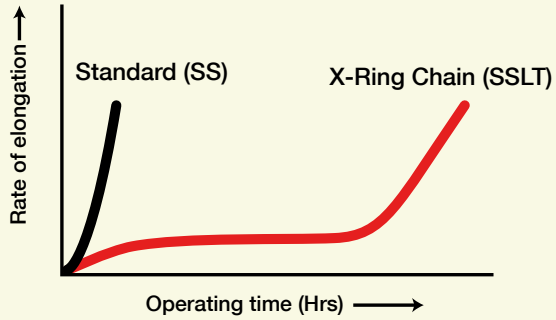

Recommended uses

- Conditions continuously exposed to chemical agents, sea water and wastewater.
  Various chemical plants, water treatment plants
- Conditions of high temperature
  Heat-treating furnaces, dry furnaces, incinerators

The grease and seal rings meet the standards of the Food Sanitation Law.
Consult us about the environmental conditions and chain selection.

Friction chart

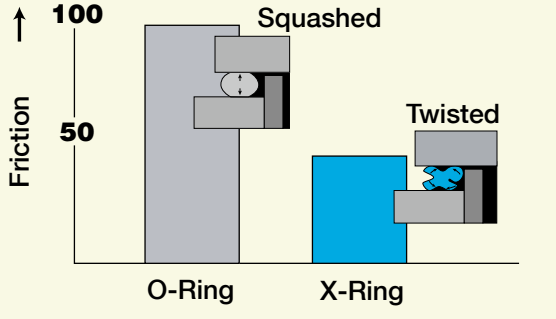

Selection of chains

The average tensile strength and maximum allowable load of the Stainless Steel Chain are both lower than a standard roller chain. Refer to the maximum allowable load for the selection of chains.

Connecting links

RJ type connecting links are used for Stainless Steel Chains #60 or smaller and CJ type connecting links for #80 or larger.

Sprockets

The pins for the X-Ring chains are longer than those of standard roller chains, and thus standard sprockets for multiplex chain cannot be used for the X-Ring chains when using this chain in multiplex.

Caution

①As a general property of stainless steel, stress corrosion cracking and pitting corrosion can be caused by chlorine and chlorine ion (Cl^-).

②The chart on right shows the data of tests on the level of corrosion resistance for each medium and does not guarantee the performance of the chains. Please take into consideration the conditions, temperature, level and other overall situation when using.

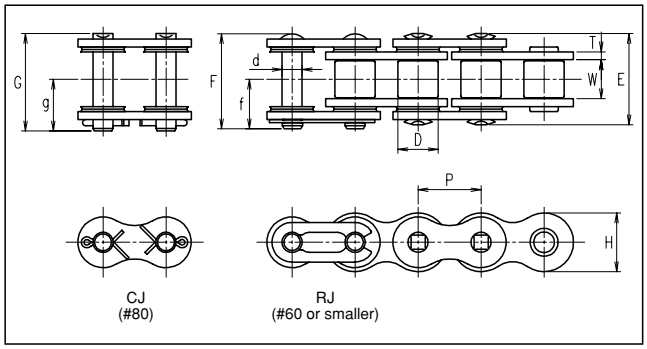

Corrosion resistance

Medium	Standard	Stainless steel
Aceton	×	○
Sulfurous gas (wet)	×	○
Sulfurous gas (dry)	—	○
Ammonia gas (cool)	—	○
Ammonia gas (hot)	×	×
Ammonia water	△	○
Ethanol	○	○
Sodium chloride, salt	×	△
Hydrochloric acid	×	×
Chlorine gas (wet)	×	×
Sea water	×	△
Hydrogen peroxide	×	△
Caustic soda (20%)	×	○
Gasoline	○	○
Potassium permanganate	△	○
Formic acid	×	×
Milk	○	○
Citric acid	×	○
Glycerin	△	○
Acetic acid (10%)	×	○
Bleaching powder, sodium hypochlorite	×	×
Carbon tetrachloride (dry)	△	△
Alcoholic soap	×	△
Oxalic acid (5%)	×	△
Oxalic acid (10%, boiled)	×	×
Nitric acid	×	○
Vinegar	×	△
Calcium hypochlorite	×	×
Baking soda	○	○
Water	×	○
Calcium hydroxide	△	○
Phenic acid, Phenol	×	△
Petroleum	○	○
Soapwater	△	○
Carbonic water	○	○
Sodium carbonate	○	○
Kerosene	○	○
Lactic acid (5%)	×	○
Lactic acid (10%, 65°C)	×	△
Paraffin	○	○
Beer	○	○
Benzene, benzol	○	○
Boric acid (5%)	×	○
Pottasium alum	×	△
Methanol	○	○
Iodine	×	×
Butyric acid	×	△
Sulfuric acid	×	×
Phosphoric acid (10%)	×	△
Sodium sulfate (5%)	△	○
Wine	○	○

Note: 1. ○:Corrosion resistant
△:Corrosion resistant depending on conditions
×: No resistance
2. Unless specified, tests were conducted at 20°C.

Dimensions

Unit (mm)

Chain No.		Pitch	Roller link width	Roller (Bush) dia.	Pin						Plate		Avg. tensile strength		Max. allowable load		Approx. weight (kg/m)
		P	W	D	d	E	F	G	f	g	T	H	kN	kgf	kN	kgf	
Single Pitch Chain	DID 40SSLT	12.70	7.95	7.92	3.96	20	20.3	—	10.7	—	1.5	11.7	13.3	1,350	0.44	45	0.68
	DID 50SSLT	15.875	9.53	10.16	5.08	23.4	24.3	—	12.8	—	2.0	14.6	20.9	2,120	0.69	70	1.1
	DID 60SSLT	19.05	12.70	11.91	5.95	29.2	29.9	—	15.6	—	2.4	17.5	30	3,050	1.03	105	1.6
	DID 80SSLT	25.40	15.88	15.88	7.93	36.5	—	39.0	—	20.7	3.2	23.0	53.4	5,420	1.77	180	2.7

Low Temperature Resistant Chain (TK)



Chain made of specialized material for extreme low-temperature down to -40°C.

Standard roller chains often become susceptible to brittle fracture when used in temperatures under -10°C. We recommend using this chain made of specialized material with high resistance to cold brittleness when using chains in extremely low temperatures. By setting the conditions according to the below table of maximum allowable load, the chain can be used in temperatures down to -40°C.

Recommended uses

- Inside freezers, conditions of high altitude or cold climates

Maximum allowable load

Chain No.	+80°C~ -10°C		-11°C~ -30°C		-31°C~ -40°C	
	kN	kgf	kN	kgf	kN	kgf
DID 40TK	3.72	380	2.54	260	2.15	220
DID 50TK	6.86	700	4.8	490	3.92	400
DID 60TK	9.31	950	6.47	660	5.39	550
DID 80TK	14.7	1,490	10.3	1,050	8.53	870
DID 100TK	22.5	2,280	15.8	1,600	13	1,320
DID 120TK	30.4	3,090	21.3	2,160	17.6	1,790
DID 140TK	40.2	4,080	28.1	2,850	23.2	2,360
DID 160TK	53	5,380	37.1	3,770	30.7	3,120

Selection of chains

The maximum allowable load of Low-temperature Resistant chains differ by temperature. Please refer to the table in the previous page for chain selection. Please refer to P122~124 for other criteria. If used in normal temperature, better shock resistance can be expected compared to standard roller chains.

Connecting links and offset links

RJ type connecting links are used for Low-temperature Resistance chains #60 or smaller and CJ type connecting links for #80 or larger. There are no offset links.

Sprockets

Standard sprockets can be used for Low-temperature Resistance Chain as their dimensions are equivalent to standard roller chains.

Caution

Please use lubrication oil for cold resistance for the maintenance of the chain.

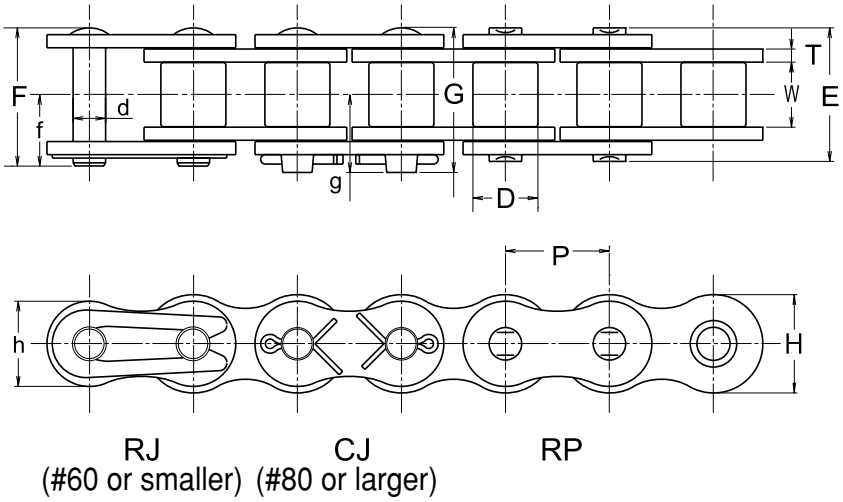

Dimensions

Unit (mm)

Chain No.	Pitch	Roller link width	Roller (Bush) dia.	Pin						Plate			Approx. weight (kg/m)
	P	W	D	d	E	F	G	f	g	T	H	h	
DID 40TK	12.70	7.95	7.92	3.97	16.5	17.6	—	9.5	—	1.50	12.0	10.4	0.63
DID 50TK	15.875	9.53	10.16	5.09	20.3	21.9	—	11.6	—	2.00	15.0	13.0	1.06
DID 60TK	19.05	12.70	11.91	5.96	25.4	26.9	—	14.3	—	2.40	18.1	15.6	1.44
DID 80TK	25.40	15.88	15.88	7.94	32.6	—	35.5	—	19.0	3.20	24.0	20.8	2.55
DID 100TK	31.75	19.05	19.05	9.54	39.5	—	42.6	—	22.7	4.00	29.9	26.0	3.79
DID 120TK	38.10	25.40	22.23	11.11	49.7	—	53.8	—	28.9	4.80	35.9	31.2	5.49
DID 140TK	44.45	25.40	25.40	12.71	53.6	—	58.4	—	31.7	5.60	41.9	36.3	7.11
DID 160TK	50.80	31.75	28.58	14.29	63.6	—	63.6	—	36.5	6.40	47.8	41.4	9.82

Unparalleled noise reduction

Super Low Noise Chain (UN) has achieved a higher drive performance while having equivalent noise reduction performance to Previous Low Noise Chain (TB). By improving the drive performance to the level of standard roller chains, Low Noise Chains are now applicable to many more machines and equipment.

Name	**Super Low Noise Chain (UN)**
	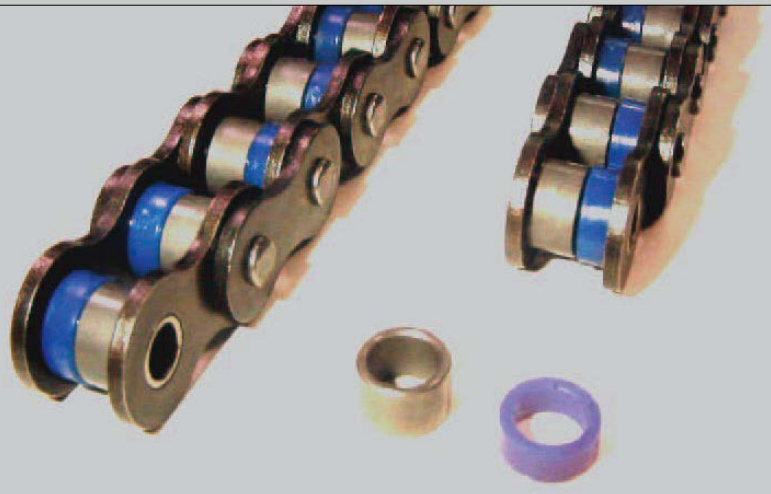
Features	①Approx. 10dB noise reduction compared to a standard chain ②Two Piece roller ③Equivalent durability (strength) to standard roller chains
Functions	Max. KW Rating 100%　Noiseless 10dB ※Noise reduction values differ by the chain sizes and conditions for use
Main uses	PRINT　PACK　CONVEYOR　MACHINING　PARKING

■ Table of Low Noise Series

Chain No.	Super Low Noise
DID 40	UN
DID 50	UN
DID 60	UN
DID 80	UN

1. Drive performance equivalent to standard chains

Max. KW Rating 100%

Excerpt from the table of Drive Performance 40TB

No. of teeth of small sprocket	Small sprocket rpm 50	200	400	600
11	0.20	0.50	0.47	0.45
12	0.22	0.57	0.53	0.51
13	0.24	0.65	0.60	0.58
14	0.26	0.72	0.67	0.65

DID 40TB

DID 40TB VS DID 40UN
(Unit: kW)

Excerpt from the table of Drive Performance 40 in the general catalog

No. of teeth of small sprocket	Small sprocket rpm 50	200	400	600
11	0.20	0.70	1.30	1.88
12	0.22	0.77	1.43	2.06
13	0.24	0.84	1.56	2.25
14	0.26	0.91	1.69	2.44

Super Low Noise DID 40UN

Set the chain speed within 210m/min.

2. Noise reduction equivalent to Previous Low Noise chains

Noiseless 10dB

※Noise reduction value differs by the chain sizes and conditions for use

The noise emitted when the chain engages with the sprockets can be reduced by approx. 10dB. For conveyor chains, sliding noise of the rails and the rollers can be reduced as well.

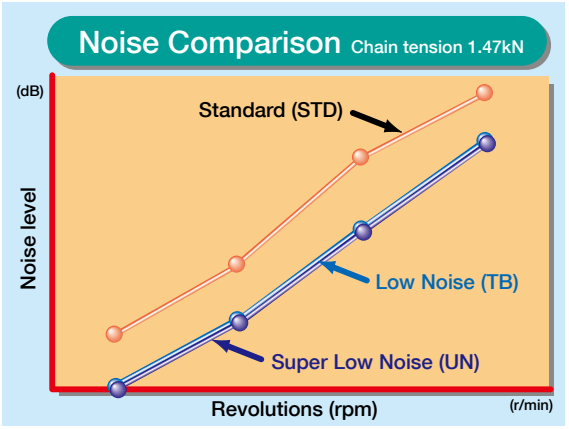

3. Durability equivalent to standard chains

The chains exhibit durability higher than Previous Low Noise chains and at the same level as standard chains.

Structures of the chains and noise reduction mechanism

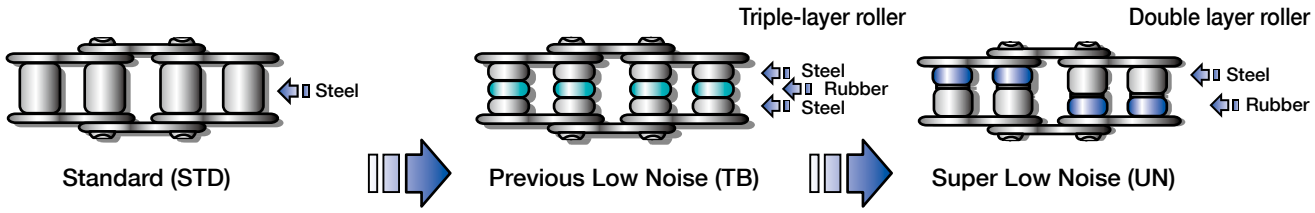

- Standard connecting links and sprockets can be used. Offset links are specialized.
- Low noise chains available in sizes DID40UN~80UN.
- Preventing partial wear of sprockets and rails
  Compared to Previous Low Noise chains, the steel rollers of the Super Low Noise are in staggered assembling in the traveling direction to reduce partial wear of the sprockets and rails.

Super Low Noise Chain (UN)

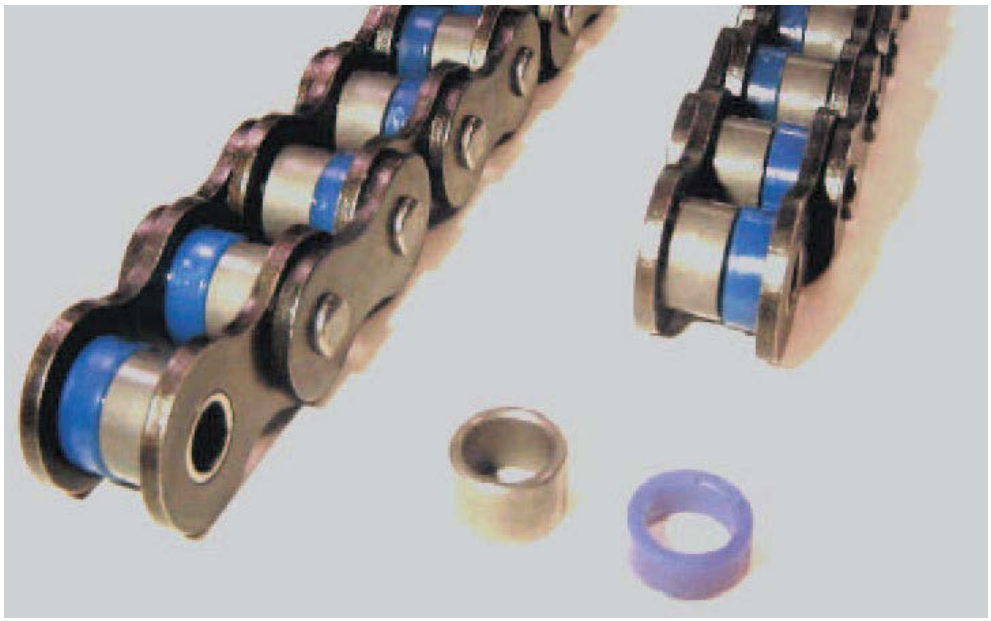

A brand new low noise chain with unparalleled noise reduction

Super Low Noise Chain (UN) has achieved a higher drive performance while having reduced noise like Previous Low Noise Chain (TB). By improving the drive performance to the level of standard roller chains, Low Noise Chains are now applicable to many more machines and equipment.

Features

- Super Low Noise Chain was developed in response to the needs for a wider application of low noise chains by modifying the triple-layer roller structure of the TB Chain into a double layer roller. Noise reduction level is equivalent to that of TB Chain.

Recommended uses

- Circumstances requiring the drive performance of chains at the noise level of belt conveyors.
- Printing machines, packaging machines, office appliances etc.

Noise reduction comparison

There is about 10dB noise reduction to the noise from when the chain engages with the sprockets. (Fig. below) The sliding noise from the rails and the rollers can be reduced as well.

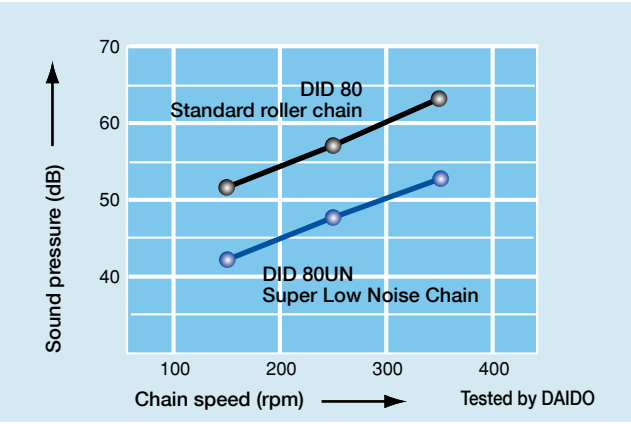

Allowable Load of Rollers

Unit: N(kgf)/piece

Chain No.	Allowable load
DID 40UN	78 (8)
DID 50UN	117 (12)
DID 60UN	196 (20)
DID 80UN	313 (32)

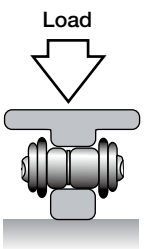

Selection of chains

See the "Selection by max. kilowatt ratings" (P122) or "Low-speed selection" (P123) for chain selection.
Note: Set the chain speed within 210 m/min.

Super low noise chains are available up to five strands.

Sprockets, connecting links and offset links

Standard sprockets and connecting links can be used. Offset links are also available.

It is recommended to use the sprockets with teeth of odd numbers or even numbers indivisible by four to engage them with the chain rollers.

Caution

The rollers are made of risen and their performance deteriorates when exposed to ultraviolet (UV) rays. In addition, do not use in circumstances where the resin roller are exposed to sprays and vapors of substances listed below:

Nonflammable hydraulic oil (phosphoric esters, water-glycol fluid), oils containing extreme-pressure additives, hot water, vapor, ester, ketone, organohalogen, pure aromatic compounds, strong acid, strong basic agents, strong acidic reagents, carbon disulfide, sulfur dioxide.

The applicable conditions are equivalent to those of standard roller chains.
The corrosion resistance against water, acid, alkaline, and other chemical substances are also equivalent to that of standard roller chains.

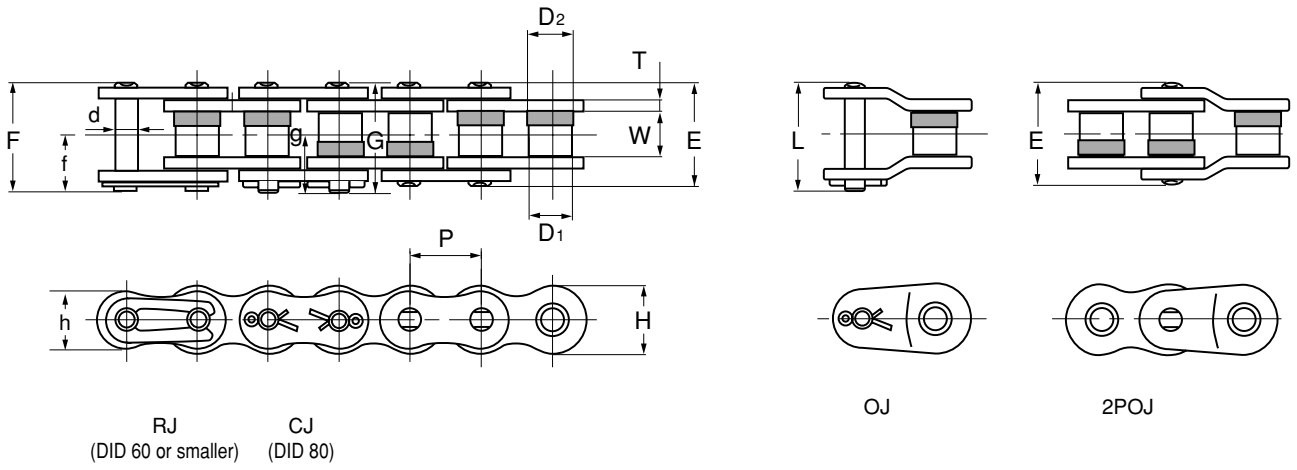

Dimensions

Unit (mm)

Chain No.	Pitch	Roller link width	Roller (Bush) dia.		Pin							Plate			Avg. tensile strength		Max. allowable load		Approx. weight (kg/m)
	P	W	D_1	D_2	d	E	F	G	f	g	L	T	H	h	kN	kgf	kN	kgf	
DID 40UN	12.70	7.95	7.72	8.15	3.97	16.5	17.6	—	9.5	—	19.3	1.50	12.0	10.4	19.1	1,940	3.72	380	0.59
DID 50UN	15.875	9.53	9.85	10.40	5.09	20.3	21.9	—	11.6	—	23.1	2.00	15.0	13.0	30.8	3,130	6.86	700	0.98
DID 60UN	19.05	12.70	11.55	12.14	5.96	25.4	26.9	—	14.3	—	30.0	2.40	18.1	15.6	44.1	4,480	9.31	950	1.43
DID 80UN	25.40	15.88	15.34	16.10	7.94	32.8	—	35.3	—	19.0	37.1	3.20	24.0	20.8	78.4	7,960	14.7	1,490	2.36

Note: 1. The values of the average tensile strength and maximum allowable tension are for the chain body.
2. Consult us for multiplex chains and other specifications.
3. Refer to the table "Allowable Load of Rollers" on P96 for an optimum sprocket.

Responding to various kind of needs

	Bicycle Chain	Agricultural Roller Chain	BS Roller Chain (ISO B-series roller chain)	
Name	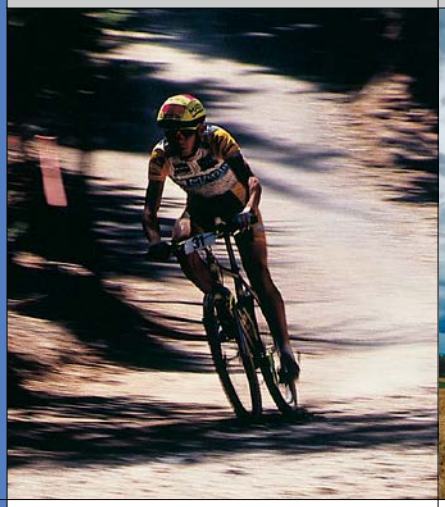			
Features	①DID brand Major product ②Rustproof treated Hi-Guard (E) available ③Lightest of the same size models	①Highly wear resistant ②Highly heavy-load resistant ③Highly shock load resistant	①Complying with ISO "B series" standard ②Complying with the British and German Standards ③Sprockets comply with the British Standard.	
Main uses	PRINT CONVEYOR HOME APPLIANCE	CONST-RUCTION AGRICULTURE	PACK TEXTILE PRINT CONVEYOR AGRICULTURE	

■ Symbols

Main uses

PRINT	Feed and drive in printing machines	CONVEYOR	Feed and drive in the conveyors and transfer equipment	TEXTILE	Feed and drive in textile machines
CONST-RUCTION	Feed and drive in construction machines	HOME APPLIANCE	Feed and drive of home appliances	AGRICULTURE	Drive of agricultural machines
PACK	Feed and drive in packaging machines	OIL FIELD	Special advantage for oil field use		

	Leaf Chain	RIG-REDi Oil Field Chain	
			Name
	①Composed of pins and plates only. ②Higher strength compared to roller chains ③Two types are available: AL and BL	①Higher fatigue strength and excellent workability for oil field use	Features
	PARKING CONST-RUCTION CONVEYOR	OIL FIELD	Main uses

■ Symbols

Main uses

PRINT Feed and drive in printing machines	CONVEYOR Feed and drive in the conveyors and transfer equipment	TEXTILE Feed and drive in textile machines
CONST-RUCTION Feed and drive in construction machines	HOME APPLIANCE Feed and drive of home appliances	AGRICULTURE Drive of agricultural machines
PACK Feed and drive in packaging machines	OIL FIELD Special advantage for oil field use	

In addition to general chains, we also manufacture numerous chains developed for specific applications such as bicycle chains and motorcycle chains.
Some specialty chains can be engaged with standard sprockets. Wear resistant properties of general chains are included in the specifications of each type of specialty chains.
Specialty chains are classified as follows:

- **Bicycle Chain**
- **Agricultural Chain**
- **BS type Roller Chain (British Standard Roller Chain)**
- **Leaf Chain**
- **Oil Field RIG-REDi Chain**

Bicycle Chain

Bicycle chains are emblematic of the DID brand, and we were founded originally for the production of bicycle chains. They have been used in many bicycles made in Japan and worldwide countries.
Recently, our Hi Guard Chain (E) with an additional rust preventive treatment has favorable reputation by users.
The bicycle chains have been continuously examined and improved in performance, quality and specifications as seen in the availability of current products. As a result, they are the lightest and most compact chains among products of the same size. Presently, they are used not only for bicycles but for many purposes such as the driving of vending machines and agricultural implements and for conveyor systems.



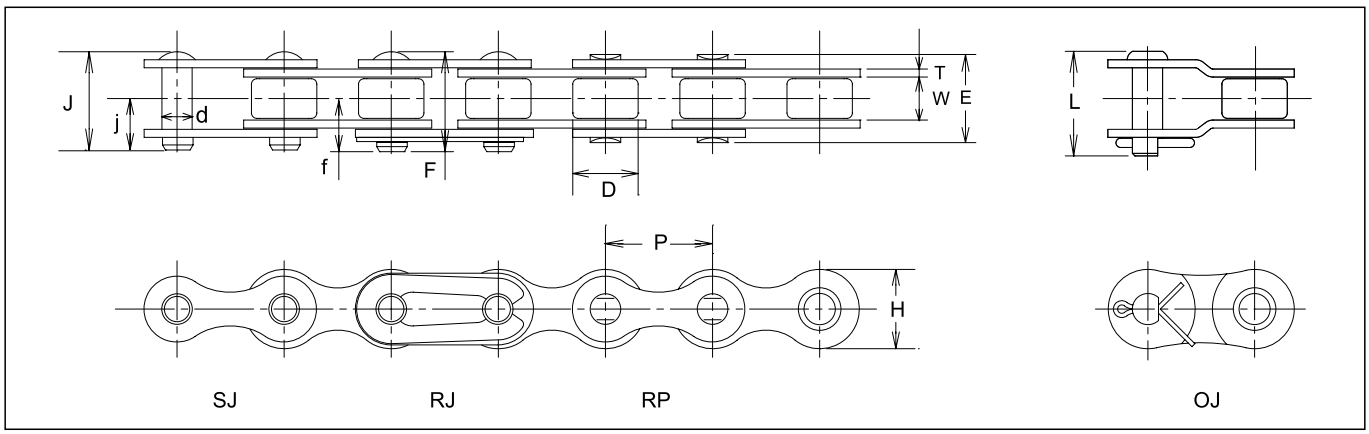

Dimensions

Unit (mm)

Chain No.	Pitch	Roller link width	Roller dia.	Pin							Plate		Guaranteed tensile strength (kN)	Avg. tensile strength	Approx. weight (kg/m)
	P	W	D	d	E	F	L	J	f	i	H	T		kN	
DID 1/2×1/8M	12.70	3.45	7.8	3.62	9.30	10.55	11.4	11.10	6.0	6.1	9.65	1.0	8.14	9.02	0.271
DID 1/2×1/8（E）	12.70	3.45	7.8	3.62	9.30	10.55	11.4	11.10	6.0	6.1	9.65	1.0	8.14	9.02	0.271
DID 1/2×1/8（N） Track racer	12.70	3.45	7.8	3.62	9.40	10.55	11.4	11.10	6.0	6.1	9.65	1.0	8.82	9.61	0.274
DID 1/2×3/16	12.70	4.80	7.8	3.62	10.75	11.95	12.3	12.15	6.7	6.8	9.65	1.0	8.14	9.02	0.313

Note: 1. Bolt connecting link is the standard connecting link for the track racer chain.
2. M and (E) models are high anti-tight type.
3. The values of avg. tensile strength are for chains.

Agricultural Roller Chain

The roller chains used for agricultural machinery like tractors, combines, binders, power tillers, and planters that provide higher productivity in modern agriculture are required to have the strength and durability to withstand wear, heavy load and shocks. Agricultural roller chains can sufficiently satisfy these conditions.



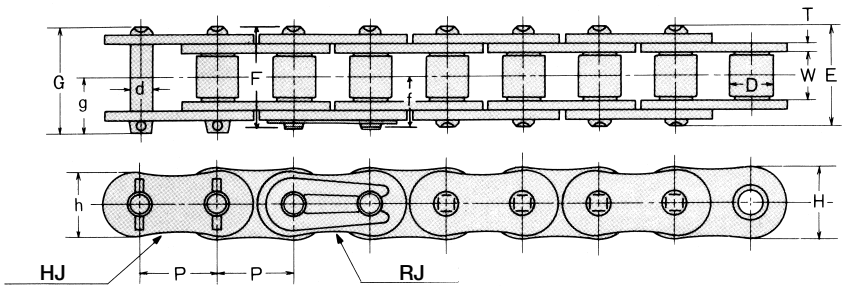

Dimensions

Unit (mm)

Chain No.	Connecting link	Pitch	Roller link width	Roller dia.	Pin						Plate				Avg. tensile strength		Max. allowable load		Approx. weight
		P	W	D	d	E	F	f	G	g	T	t	H	h	kN	kgf	kN	kgf	(kg/m)
※**DID 35HS**	RJ	9.525	4.78	(5.08)	3.59	13.1	13.7	7.8			1.50	1.50	9.0	7.75	12.7	1,300	2.54	260	0.39
※**DID 35HK2**	—	9.525	4.78	(5.08)	3.59	15.5	15.4				2.00	2.00	9.0	7.75	19.1	1,950	3.23	330	0.46
DID 083	RJ	12.70	4.88	7.75	4.09	12.5	13.55	7.35			1.25	1.25	10.3	9.6	13.1	1,340	2.35	240	0.43
DID 415S	RJ	12.70	4.76	7.77	3.97	13.25	14.3	7.98			1.5	1.5	12.0	10.4	19.1	1,950	3.72	380	0.55
DID 420	RJ	12.70	6.35	7.77	3.97	14.75	16.15	8.80			1.5	1.5	12.0	10.4	17.8	1,820	3.72	380	0.58
DID 428	RJ	12.70	7.94	8.50	4.51	16.7	18.05	9.83			1.5	1.5	12.0	10.4	19.6	2,000	3.92	400	0.66
DID 428H	RJ	12.70	7.94	8.50	4.51	18.9	20.1	10.88			2.0	2.0	12.0	10.4	23.3	2,380	4.90	500	0.76
DID 520	RJ	15.875	6.35	10.16	5.09	17.45	18.85	10.25			2.0	2.0	15.0	13.0	30.4	3,100	6.86	700	0.89
DID 50	RJ	15.875	9.53	10.16	5.09	20.3	21.9	11.6		12.0	2.0	2.0	15.0	13.0	30.8	3,150	6.86	700	1.06
DID 520HK	RJ	15.875	6.35	10.16	5.09	18.6	20.2	10.7			2.4	2.4	15.0	13.0	36.2	3,700	7.84	800	1.00
DID 630K	RJ	19.05	9.53	11.91	5.96	22.1	23.6	12.6			2.4	2.4	18.1	15.6	44.1	4,500	9.31	950	1.37
DID 630HK	RJ	19.05	9.53	11.91	5.96	25.7	26.8	14.3			3.2	3.2	18.1	15.6	50.5	5,150	10.7	1,100	1.72
DID 630HKS	RJ	19.05	9.53	11.91	5.96	25.7	26.8	14.3			3.2	3.2	18.1	15.6	53.9	5,500	10.7	1,100	1.72
DID 630SK	—	19.05	9.53	14.28	7.11	26.25		14.6			3.6	3.2	18.1	18.1	64.7	6,600	10.7	1,100	2.03
DID 630FSK2	—	19.05	9.53	14.28	7.11	28.5					4.2	3.4	19.1	19.1	72.5	7,400	17.6	1,800	2.47
DID 635SK	—	19.05	11.10	14.28	7.11	27.8					3.6	3.2	18.1	18.1	64.7	6,600	10.7	1,100	2.21
DID 60H	RJ	19.05	12.70	11.91	5.96	28.7	30.5	16.1	31.2		3.2	3.2	18.1	15.6	46.0	4,700	10.7	1,100	1.81
DID 60SK	—	19.05	12.70	14.28	7.11	29.8		16.4			3.6	3.2	18.1	18.1	64.7	6,600	10.7	1,100	2.23
DID 80GS	HJ	25.40	15.88	15.88	8.71	37.7			40.3		4.8	4.0	24.7	24.7	117.0	12,000	27.4	2,800	4.31

Note: 1. DID630FSK, DID630FSK2, DID80GS have flat oval-shaped plates.
2. The values of max. allowable tension are not applied to connecting links.
3. Those marked with ※ are bushing chains.

BS Roller Chain (British Standard Roller Chain)

DID BS Roller Chains conform to the ISO (International Organization for Standardization) "B series", and they are manufactured in conformity with the British Standard or German Standard. For sprockets, use those in conformity with the BS standard.

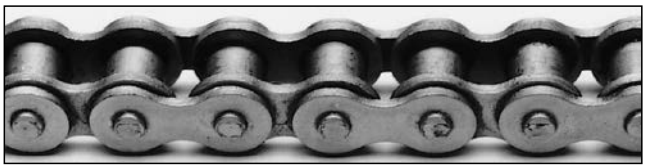

Dimensional drawing

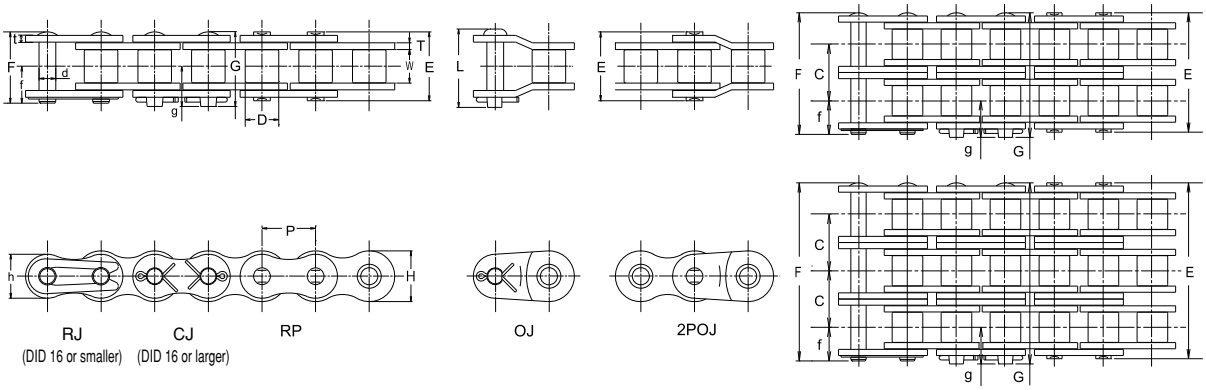

Dimensions

Unit (mm)

Chain No.		Pitch	Roller link width	Roller dia.	Pin							Transverse pitch	Plate				JIS Min. tensile strength		DID Avg. tensile strength		Approx. weight
DID	JIS B	P	W	D	d	E	F	G	L	f	g	C	T	t	H	h	kN	kgf	kN	kgf	(kg/m)
DID 04B	—	6.00	2.80	4.00	1.85	6.7	7.35	—	—	4.15	—	—	0.63	0.63	4.9	4.9	—	—	3.33	340	0.12
DID 05B	05B					7.75	8.60	—	—								4.4	449	5.68	580	0.18
DID 05B-2	05B-2	8.00	3.00	5.00	2.31	13.45	14.25	—	—	4.80	—	5.64	0.75	0.75	7.1	6.2	7.8	795	9.21	940	0.34
DID 06B	06B					13.15	13.6	—	—								8.9	908	10.4	1,070	0.39
DID 06B-2	06B-2	9.525	5.72	6.35	3.28	22.75	23.9	—	—	7.4	—	10.24	1.3	1.0	8.2	8.2	16.9	1,720	19.4	1,980	0.74
DID 06B-3	06B-3					33.0	34.3	—	—								24.9	2,539	27.4	2,800	1.10
DID 08B	08B					16.7	18.1	—	19.45								17.8	1,815	19.6	2,000	0.67
DID 08B-2	08B-2	12.70	7.75	8.51	4.45	30.7	32.0	—	33.25	9.9	—	13.92	1.5	1.5	11.9	10.4	31.1	3,170	34.3	3,500	1.30
DID 08B-3	08B-3					44.6	46.0	—	47.25								44.5	4,537	49.0	5,000	1.92
DID 10B	10B					18.9	20.4	—	22.1								22.2	2,260	25.4	2,600	0.86
DID 10B-2	10B-2	15.875	9.65	10.16	5.08	35.5	37.0	—	38.7	10.9	—	16.59	1.5	1.5	14.7	13.0	44.5	4,537	50.9	5,200	1.68
DID 10B-3	10B-3					52.2	53.7	—	55.25								66.7	6,800	76.4	7,800	2.54
DID 12B	12B					22.2	23.6	—	26.45								28.9	2,946	31.3	3,200	1.14
DID 12B-2	12B-2	19.05	11.68	12.07	5.72	41.7	43.1	—	45.9	12.7	—	19.46	1.8	1.8	16.1	14.6	57.8	5,890	62.7	6,400	2.28
DID 12B-3	12B-3					61.3	62.7	—	65.45								86.7	8,840	94.1	9,600	3.46
DID 16B	16B					35.7		38.2	40								60	6,118	63.7	6,500	2.56
DID 16B-2	16B-2	25.40	17.02	15.88	8.28	67.6	—	70.3	71.9	—	20.7	31.88	4.0	3.2	21.0	21.0	106	10,808	127	13,000	5.12
DID 16B-3	16B-3					99.5		102.2	103.8								160	16,315	191	19,500	7.59
DID 20B	20B					41.2		44.0	45.1								95	9,687	98.0	10,000	3.81
DID 20B-2	20B-2	31.75	19.56	19.05	10.19	77.7	—	80.5	82.7	—	23.5	36.45	4.5	3.5	26.4	26.4	170	17,335	196	20,000	7.57
DID 20B-3	20B-3					114.2		117.0	119.2								250	25,490	294	30,000	11.3
DID 24B	24B					53.4		58.7	59.4								160	16,315	166	17,000	7.08
DID 24B-2	24B-2	38.10	25.40	25.40	14.63	101.8	—	107.1	109.1	—	32.0	48.36	6.0	5.0	33.4	33.4	280	28,550	333	34,000	13.9
DID 24B-3	24B-3					150.2		155.5	157.5								425	43,337	500	51,000	20.7

Note: 1. 2POJ offset links are used for DID04B and DID05B.
2. DID06B has flat oval-shaped plates.
3. RJ type connecting links are used for DID06B-16B and CJ type connecting links for DID16-24B.

Leaf Chain

Leaf chains consist of pins and plates only and are higher in strength than roller chains. They are suitable for tasks like hoisting and pulling. Leaf chains conform to ANSI and have two types: AL and BL.



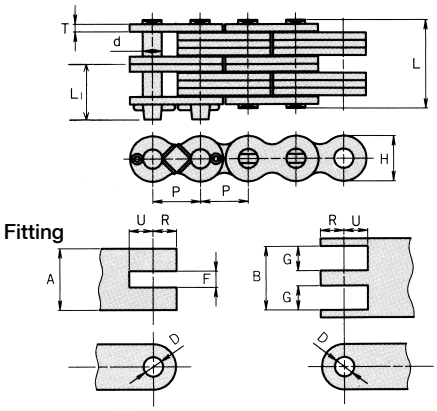

Dimensions

Unit (mm)

Chain No.	Pitch	Plate		Pin			Min. tensile strength		Max. allowable load		Approx. weight	Fitting						
	P	H (Max)	T	d	L (Max)	L1 (Max)	kN	kgf	kN	kgf	(kg/m)	b (Min)	R	U (Min)	F (Min)	G (Min)	A (Max)	B (Min)
DID AL 422	12.59	10.4	1.5	3.97	8.1	6.0	16.6	1,690	1.86	190	0.40	4.00	6.3	6.3	—	—	3.0	3.3
DID AL 444					14.6	9.8	33.3	3,380	3.43	350	0.77				3.3	3.3	9.3	9.7
DID AL 466					21.1	12.6	50	5,080	3.92	400	1.14				3.3	3.3	15.7	16.1
DID AL 522	15.75	13.0	2.0	5.09	10.5	7.3	27.9	2,830	3.04	310	0.65	5.12	7.9	7.9	—	—	4.0	4.3
DID AL 544					19.0	11.5	55.8	5,660	5.29	540	1.26				4.3	4.3	12.3	12.7
DID AL 566					27.5	15.8	83.8	8,510	6.27	640	1.85				4.3	4.3	20.7	21.1
DID AL 622	19.05	15.6	2.4	5.96	12.5	8.8	38.2	3,880	4.41	450	0.90	6.00	9.5	9.5	—	—	4.8	5.1
DID AL 644					22.7	13.9	76.4	7,760	7.45	760	1.75				5.1	5.1	14.7	15.1
DID AL 666					32.6	19.0	114	11,570	8.72	890	2.59				5.1	5.1	24.7	25.1
DID AL 822	25.19	20.8	3.2	7.94	16.4	11.0	66.6	6,760	7.35	750	1.55	8.00	12.7	12.7	—	—	6.4	6.8
DID AL 844					29.7	17.8	133	13,500	13.2	1,340	3.04				6.8	6.8	19.8	20.1
DID AL 866					43.1	24.5	200	20,300	15.3	1,550	4.51				6.8	6.8	32.9	33.4
DID AL 1022	31.64	26.0	4.0	9.54	19.9	13.1	100	10,150	11.5	1,170	2.46	9.60	15.8	15.8	—	—	8.0	8.4
DID AL 1044					36.4	21.3	200	20,300	20.5	2,080	4.80				8.4	8.4	24.4	24.9
DID AL 1066					53.1	29.7	300	30,460	24	2,440	7.15				8.4	8.4	40.9	41.4
DID AL 1222	37.98	31.2	4.8	11.11	23.8	15.3	141	14,310	16.4	1,660	3.32	11.20	19.0	19.0	—	—	9.6	10.0
DID AL 1244					43.4	25.2	282	28,630	29.1	2,950	6.50				10.0	10.0	29.2	29.7
DID AL 1266					63.4	35.1	423	42,940	34.2	3,470	9.68				10.0	10.0	48.9	49.4
DID AL 1444	44.32	36.3	5.6	12.71	50.6	30.1	372	37,770	38.9	3,950	10.0	12.80	22.2	22.2	11.6	11.6	34.0	34.5
DID AL 1446					73.6	41.6	558	56,650	46	4,670	14.6				11.6	11.6	56.9	57.4
DID AL 1644	50.62	41.4	6.4	14.29	57.5	33.4	470	47,720	49.9	5,070	12.7	14.40	25.4	25.4	13.2	13.2	38.8	39.4
DID AL 1666					83.6	46.4	706	71,680	58.8	5,970	19.6				13.2	13.2	64.9	65.5
DID BL 423	12.70	12.0	2.0	5.09	12.5	8.5	24.5	2,490	4.51	460	0.86	5.12	6.3	6.3	—	—	6.0	6.3
DID BL 434					16.9	10.6	37.2	3,780	5.29	540	1.16				2.2	4.3	10.3	10.7
DID BL 446					23.2	13.7	49	4,970	5.98	610	1.69				4.3	6.4	16.3	16.8
DID BL 523	15.875	15.0	2.4	5.96	15.0	9.9	39.2	3,980	6.86	700	1.30	6.00	7.9	7.9	—	—	7.2	7.5
DID BL 534					20.2	12.5	58.8	5,970	8.33	850	1.73				2.6	5.1	12.3	12.7
DID BL 546					27.7	16.3	78.4	7,960	9.41	960	2.44				5.1	7.6	19.5	20.0
DID BL 623	19.05	18.1	3.2	7.94	19.8	12.6	68.6	6,960	9.8	990	2.08	8.00	9.5	9.5	—	—	9.7	10.0
DID BL 634					26.7	16.2	103	10,460	12.2	1,240	2.85				3.4	6.8	16.2	16.9
DID BL 646					36.7	21.1	127	12,890	13.7	1,390	4.07				6.8	10.1	26.0	26.6
DID BL 823	25.40	24.0	4.0	9.54	24.0	15.3	102	10,360	16.9	1,720	3.25	9.60	12.7	12.7	—	—	12.1	12.4
DID BL 834					32.4	19.3	154	15,630	20.5	2,080	4.50				4.2	8.4	20.2	20.9
DID BL 846					44.8	25.5	205	20,810	23.5	2,390	6.39				8.4	12.5	32.4	33.0
DID BL 1023	31.75	29.9	4.8	11.11	28.6	17.7	141	14,310	25.9	2,630	4.33	11.20	15.8	15.8	—	—	14.4	14.8
DID BL 1034					38.6	22.7	220	22,340	31.3	3,180	6.03				5.0	10.0	24.2	24.9
DID BL 1046					53.9	30.2	282	28,630	36.2	3,680	8.53				10.0	14.9	38.8	39.4
DID BL 1223	38.10	35.9	5.6	12.71	33.3	21.5	193	19,590	36.7	3,730	6.06	12.80	19.0	19.0	—	—	16.8	17.3
DID BL 1234					44.8	27.2	313	31,780	44.1	4,480	8.45				5.9	11.6	28.0	28.8
DID BL 1246					61.7	36.1	386	39,190	50.5	5,130	12.0				11.6	17.4	45.2	45.9
DID BL 1423	44.45	41.9	6.4	14.29	37.6	23.4	254	25,790	49	4,970	8.74	14.40	22.2	22.2	—	—	19.2	19.7
DID BL 1434					50.7	30.0	421	42,740	58.8	5,970	10.9				6.7	13.2	32.0	32.8
DID BL 1446					70.4	39.8	509	51,680	67.6	6,860	20.3				13.2	19.8	51.6	52.3
DID BL 1623	50.80	47.8	7.1	17.46	41.7	26.7	353	35,840	58.8	5,970	11.9	17.60	25.4	25.4	—	—	21.3	21.8
DID BL 1634					56.4	34.0	554	56,240	70.6	7,170	16.6				7.4	14.6	35.5	36.3
DID BL 1646					78.0	44.8	706	71,680	80.4	8,160	23.6				14.6	11.9	57.2	57.9

Note: 1. Except for AL-60 series, the pitch of AL type chains is slightly different to that of ANSI standard.
2. The values of max. allowable tension are not applied to connecting links.

AL type	BL type
For the use that static load is applied with little concern of wearing.	For the use that wear resistance is required since impact load is applied.
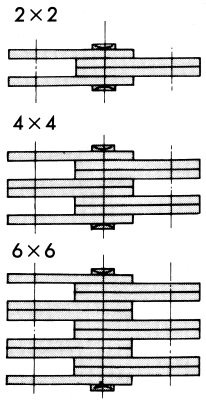	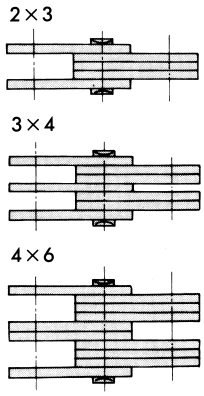

Selection of leaf chains

The chain size is selected according to the following formula:

Acting tension×Service factor≦Maximum allowable tension

Notes: 1. Acting tension includes the dead weight of the chain, the weight of the attachments and inertia.

2. If the chain speed exceeds 30 m/min, use a DID roller chain.

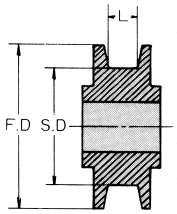

Minimum sheave diameter: S.D
= Chain pitch×5

Minimum width between flanges: L
= Overall length of pin×1.05

● If connecting pins are provided: L≧2L1×1.05
L1 is the value stated in the dimensions table.

F.D = S.D + Maximum link plate height (H)

Note: ● If dimension H exceeds 25.4, F.D = S.D + 25.4 can be adopted as the minimum flange outer diameter.

Service factor

Type of Impact		Service factor	Examples of applications	Applicable chains
Smooth transmission	When starts and stops are smooth and loads hardly vary.	1.0	For lifting a balance weight, stretching in cold and hot processing etc.	AL type
With some shock	When starts, stops, load variations or reversing occurs often.	1.2	Forklift, etc.	AL type and BL type
With large shock	When sudden start, stop or reversing occurs and load largely varies.	1.4	Mining and construction machinery, etc.	BL type and DID roller chains

Periodical inspection and instructions for replacement

Be sure to carry out periodical inspection and lubrication to confirm safety and prolong chain life. Problems, possible causes and instructions for solution are outlined in the following table.

Periodical inspection table

Problem	Possible cause	Solution
Circumferential wear of plate 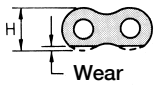	Wear	Replace the chain if wear loss becomes 5 percent of H.
Oblique wear of plate and pin head 	Misalignment of guide or pulleys	Align the unit.
Stiff link 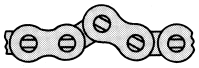	Dust or foreign substances are contained in a bending portion Corrosion and rust Bent pin	Wash and lubricate. Replace the chain. Replace the chain.
Abnormal protrusion or rotation of pin head 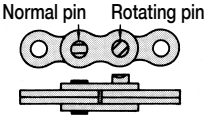	Excessive tension by overload or insufficient lubrication	Replace the chain Lubricate and eliminate overload.
Wear elongation 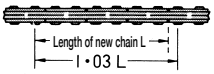	Wear Permanent deformation (elongation) due to overload	Replace the chain when its length becomes 1.03L. Note: Wear elongation of a chain lowers its tensile strength. Wear elongation of 3% lowers the tensile strength by 18 percent. The wear life of chain can be improved by lubrication. Replace the chain.
Cracked plate (1)  Crack: From the hole of a link plate toward the end of the link plate in the direction perpendicular to tension direction.	Load exceeding the allowable tension of chain	Replace the chain with a chain of higher maximum allowable tension, or lower the load or dynamic (shock) load.
Cracked plate (2)  Crack: In an oblique direction against tension direction.	Heavy rust or exposure to an acid or corrosive material	Replace the chain, and protect from corrosive circumstances.
Broken plate (by high tension) 	Overload	Replace the chain, and eliminate the cause of overload.
Enlarged plate hole 	Overload	Replace the chain, and eliminate the cause of overload.
Corrosion of pit	Corrosive circumstances	Replace the chain, and protect from corrosive circumstances.
Wear of connecting pin	Normal wear	Replace the worn component.

Oil Field RIG-REDi Chain

SINGLE AND MULTIPLE STRAND
FOR SIZE 80 THROUGH 180 (M-TYPE COTTER)

RIG-REDi

RIG-REDi Chain series have wide range of large multiplex chain for oil field use. The series has not only high fatigue strength but also excellent workability when cutting and jointing.

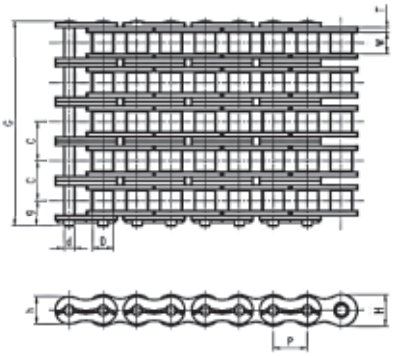

UJ
(Connecting Link)

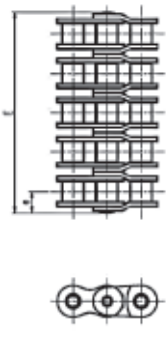

2POJ
(Offset Link)

Chain No.		Pitch	Roller Link Width	Roller Dia.	Pin					Transverse Pitch	Plate			DID Avg.Tensile Strength	Approx. Weight
DID	ANSI	P	W	D	d	E	G	e	g	C	T	H	h	(kN)	(kg/m)
DID80RR	80	25.40	15.88	15.88	7.94	32.6	35.4	16.3	19.0	29.3	3.2	24.0	20.8	78.4	2.6
DID80RR-2	80-2					61.8	64.7							156.0	5.2
DID80RR-3	80-3					91.3	94.0							235.0	7.7
DID80RR-4	80-4					120.6	123.3							313.0	10.2
DID80RR-5	80-5					149.9	152.6							392.0	12.7
DID80RR-6	80-6					179.2	181.9							470.0	15.2
DID80RR-8	80-8					237.8	240.5							627.0	20.3
DID100RR	100	31.75	19.05	19.05	9.54	39.5	42.6	19.8	22.7	35.8	4.0	29.9	26.0	118.6	3.8
DID100RR-2	100-2					75.3	78.3							237.2	7.6
DID100RR-3	100-3					111.2	114.2							355.7	11.3
DID100RR-4	100-4					147.0	150.0							474.3	15.1
DID100RR-5	100-5					182.9	185.9							593.0	18.9
DID100RR-6	100-6					218.7	221.7							711.5	22.7
DID100RR-8	100-8					290.3	293.3							948.6	30.3
DID120RR	120	38.10	25.40	22.23	11.1	49.7	53.0	24.9	28.2	45.4	4.8	35.9	31.2	166.6	5.6
DID120RR-2	120-2					95.2	98.5							333.2	11.1
DID120RR-3	120-3					140.6	143.9							499.8	16.6
DID120RR-4	120-4					186.1	189.4							666.4	22.1
DID120RR-5	120-5					231.5	234.8							883.0	27.6
DID120RR-6	120-6					276.9	280.2							999.6	33.1
DID120RR-8	120-8					367.7	371.0							1332.8	44.1
DID140RR	140	44.45	25.40	25.40	12.71	53.6	59.6	26.8	31.7	48.9	5.6	41.9	36.3	232.6	7.2
DID140RR-2	140-2					102.6	108.6							465.3	14.2
DID140RR-3	140-3					151.5	156.3							697.9	21.2
DID140RR-4	140-4					200.5	205.3							930.6	28.2
DID140RR-5	140-5					249.4	254.2							1163.2	35.0
DID140RR-6	140-6					298.3	303.1							1395.9	42.0
DID140RR-8	140-8					396.1	400.9							1861.1	55.9
DID160RR	160	50.80	31.75	28.58	14.29	63.6	68.2	31.9	36.5	58.5	6.4	47.8	41.4	290.5	10.0
DID160RR-2	160-2					122.2	126.8							560.9	19.6
DID160RR-3	160-3					180.8	185.4							871.4	29.2
DID160RR-4	160-4					239.3	243.8							1161.9	38.8
DID160RR-5	160-5					297.8	303.4							1452.3	48.4
DID160RR-6	160-6					356.3	361.9							1742.8	58.0
DID180RR	180	57.15	35.72	35.71	17.46	71.5	77.3	35.8	41.6	65.8	7.1	53.8	46.6	391.0	12.9
DID180RR-2	180-2					137.4	143.2							782.0	25.2
DID180RR-3	180-3					203.3	209.1							1173.0	37.5
DID180RR-4	180-4					269.1	274.9							1564.0	49.8

- Riveted Both Sides and Double Cotter Pins are available upon request.
- Two Pitch Offset Link is recommended.
- Cover Plate for Connecting Link is interference fit.

SINGLE AND MULTIPLE STRAND FOR SIZE 200 (T-PIN TYPE)

RIG-REDi

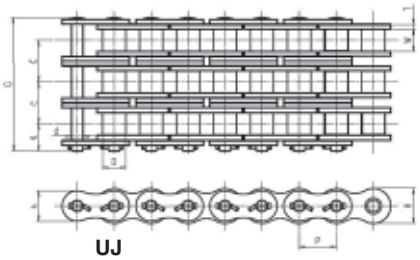

UJ
(Connecting Link)

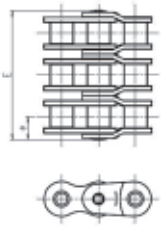

2POJ
(Offset Link)

Chain No.		Pitch	Roller Link Width	Roller Dia.	Pin					Transverse Pitch	Plate			DID Avg.Tensile Strength	Approx. Weight
DID	ANSI	P	W	D	d	E	G	e	g	C	T	H	h	(kN)	(kg/m)
DID200RR	200	63.50	38.10	39.68	19.85	77.9	85.0	39.0	46.0	71.6	8.0	60.0	52.0	507.1	16.8
DID200RR-2	200-2					149.6	156.6							1014.2	32.8
DID200RR-3	200-3					221.3	228.3							1521.3	48.8
DID200RR-4	200-4					292.9	299.9							2028.4	64.8

- Riveted Both Sides and Double Cotter Pin are available upon request.
- Two Pitch Offset Link is recommended.
- Cover Plate for Connecting Link is interference fit.

SINGLE AND MULTIPLE STRAND FOR SIZE 240 (S-PIN TYPE)

RIG-REDi

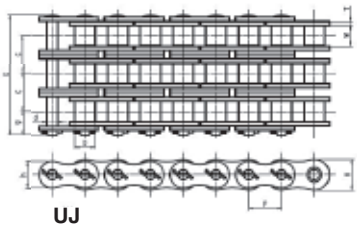

UJ
(Connecting Link)

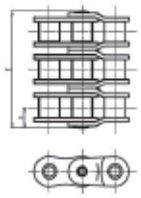

2POJ
(Offset Link)

Chain No.		Pitch	Roller Link Width	Roller Dia.	Pin					Transverse Pitch	Plate			DID Avg.Tensile Strength	Approx. Weight
DID	ANSI	P	W	D	d	E	G	e	g	C	T	H	h	(kN)	(kg/m)
DID240RR	240	76.20	47.63	47.63	23.81	95.2	102.9	47.7	55.3	87.8	9.5	71.5	62.0	686.0	23.7
DID240RR-2	240-2					183.1	190.8							1372.0	46.4
DID240RR-3	240-3					270.9	278.6							2058.0	69.1
DID240RR-4	240-4					358.7	366.4							2744.0	91.7

- Riveted Both Sides and Double Cotter Pin are available upon request.
- Two Pitch Offset Link is recommended.
- Cover Plate for Connecting Link is interference fit.

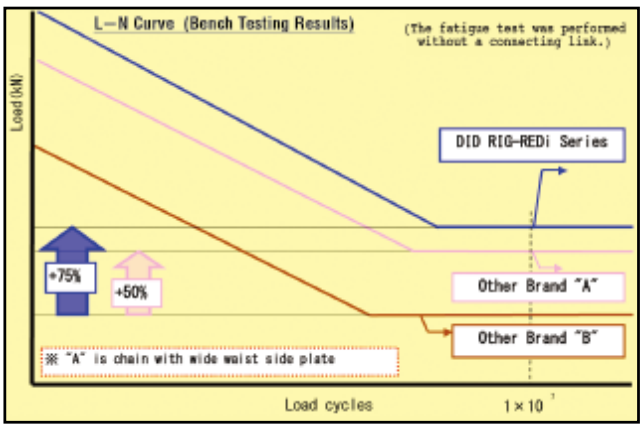

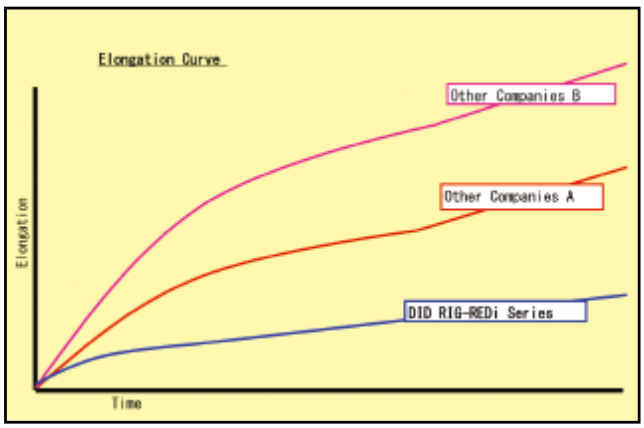

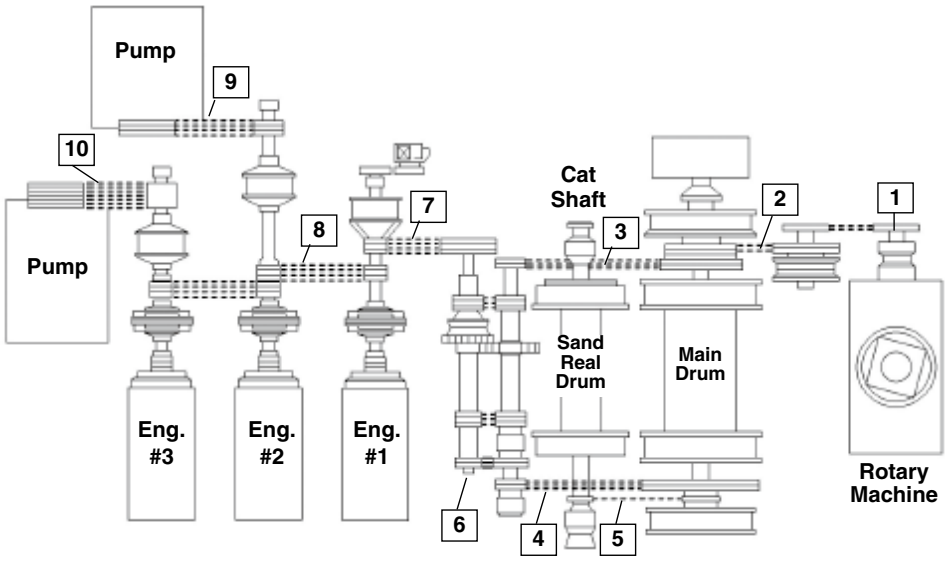

Chain Drive		RIG HORSEPOWER						
		4000	3000	2000	1500	1000	750	500
①	Rotary Table	160-2	160-2 200H-1	160-2	160-2 140-2	140-2 160-1	140-2 160-1	140-1 120-1
②	Rotary Countershaft	160-2	160-2 200H-1	160-2	160-2 140-2	140-2 160-1	140-2 160-1	140-1 120-1
③	High Drum	240-3	200H-3	160-4	160-3	140-3 160-2	160-2 140-2	120-3 140-2
④	Low Drum	240-3	200H-3	160-4	160-3	140-3 160-2	160-2 140-3	120-3 140-2
⑤	Catshaft	160-2	160-2 200H-1	160-2	160-1 140-2	160-1 140-2	160-1 140-2	140-1 120-1
⑥	Transmission	140-8	160-4 200H-3	160-4 160-3	160-3	160-2 140-3	140-2	120-2 100-3
⑦	Drawworks Input	140-8	120-8	120-6	120-4	120-3 120-4	100-4	100-3 100-4
⑧	Compound	140-8	120-8	120-6	120-4	120-3 120-4	100-4	100-3
⑨⑩	Mud Pump Drives	140-8	120-8	120-8 120-6	120-6 120-4	120-4 120-3	100-6 100-4	100-4 100-3



Shot Peening

Shot Peening treatment is performed on all component parts;Pins, Bushings. Rollers and Side Bars. This process improves compressive residual stress, resulting in high shock load and fatigue strength.



M-Type Cotter

For single & multiple strand size 80 - 180

CBPTREATMENT BALL DRIFTING

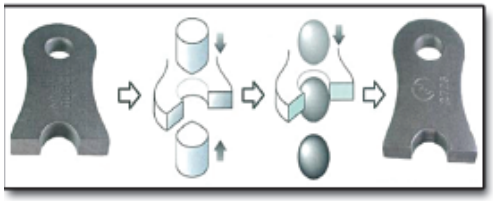

CBPTREATMENT

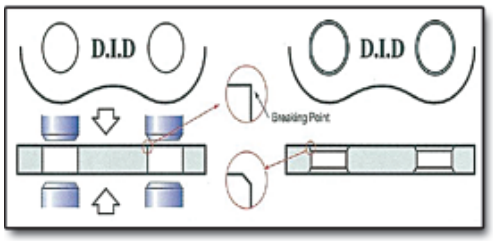

CBPTreatment & Ball Drifting Center Link Plate Holes

CBP stands for Compression Beveling Process. This process eliminates the breakthrough edges of the link plate hole. This area can be the origin of where link plate fatigue begins. D.I.D's unique CBP and Ball Drifting applied to the Center Link Plate Holes improves fatigue strength dramatically without sacrificing workability.



Quad Staked Riveting

The style of rivet on the opposite side of the M.T. or S style cotter. Quad staking improves Pin Push Out Force.

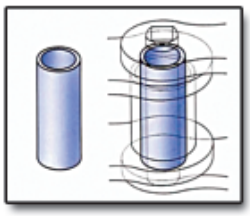

Solid Bushing

Solid Bushings having smooth surfaces are assembled into all **RIG-REDi** Chains. This style of bushing enhances the wear life of the chain due to the optimum pin contact at the inside surface area.



Pre-Loading

Pre-Loading performed after assembly eliminates initial stretch at the beginning stage of operation.



Chain Grease

Newly developed grease applied over **RIG-REDi** Chains enhances the wear life and improves the corrosion resistance of the chain.

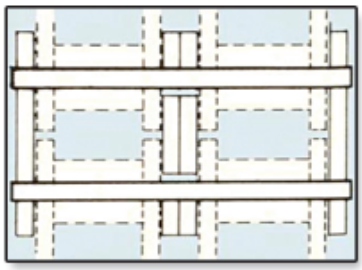

Short Pitch Center Link Plate

Center Link Plate Hole is designed to have clearance fit for improving workability. Center Link Pitch is shortened to minimize the flexural deformation of pin which provides higher fatigiue strength and shock load resistance.

Roller Chain Coupling

Features

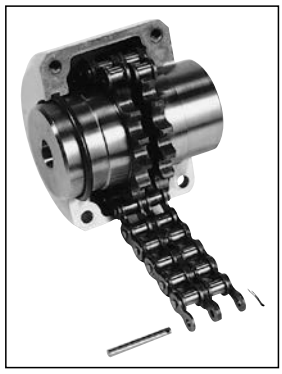

1. Simple structure

A roller chain coupling consists of one duplex roller chain and two sprockets for a simplex chain. Handling is very simple as both the shafts (driving shaft and driven shaft) can be connected and disconnected by inserting or removing connecting pins (cotter type).

2. Easy alignment

Owing to the play between the respective components of the chain and the play between the roller chain and the sprockets, the eccentricity and angle error can be generally allowed as follows:

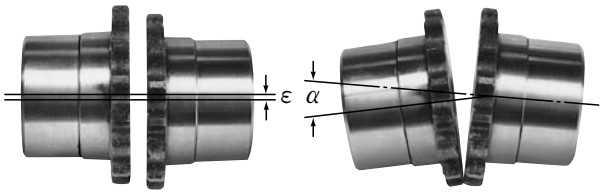

- Eccentricity ε : Up to 2% of the roller chain pitch
- Angle error α : Up to 1°

When the roller chain coupling is used for high speed rotation (in the range of lubrication types B and C), keep the allowances less than half of the above.

3. Small but powerful

Since a powerful roller chain is engaged with the sprockets at all the teeth, a large torque can be transmitted, though the coupling itself is smaller than other kinds of couplings.

4. Excellent durability

The roller chain is made of heat-treated steel and manufactured precisely and solidly to the highest manufacturing standard. The durability is outstanding and little time is required for maintenance as the sprockets have induction-hardened special teeth, and are always engaged with the roller chain.

5. Protection of machine

Rational flexibility decreases vibration, overheating and wear of the bearings caused by the eccentricities and angle errors of the shafts.

Standard housing

The standard housings for No. 8022 or smaller are made of aluminum alloy die casting. Installation of housings has the following advantages.



1. Advantages of housing

- **Holding of lubrication**
  Since a roller chain coupling rotates with flexibility, the teeth of the roller chain and sprockets slide slightly during operation. So, they must be kept lubricated for prevention of wear as much as possible. The housing functions as a grease box for the lubrication.
- **Prevention of grease scattering**
  Especially in high speed rotation, grease may be scattered by centrifugal force. The housing functions as a protector that prevents this.
- **Protection from dust and moisture (corrosive atmosphere)**
  When a roller chain coupling is used in a wear-causing or corrosive circumstances, the chain life is extremely shortened unless the coupling is perfectly shielded from the circumstances. The housing functions to protect the roller chain coupling, preventing the shortening of life.
- **High safety and neat appearance**
  Since the housing has no protrusions outside, it is safe even if it rotates with the roller chain coupling. It is also neat in appearance. (To avoid possible injury, do not touch the housing when rotating.)

2. Structure

The roller chain coupling can be split in the direction perpendicular to the shafts. The hole on the driving shaft side of the housing firmly holds the coupling's sprocket hub. The hole on the driven shaft side keeps a clearance of 1 mm or more from the sprocket hub to maintain flexibility of the coupling. Oil leakage from this portion is prevented by a seal ring.

⚠ Cautions

For safe work	• Always wear clothing suitable for work and proper protection (safety glasses, safety shoes, etc.).
	• Strictly observe Section 1 "General standards (prevention of danger by motors, revolving shafts, etc.), Chapter 1, Part 2 of Occupational Safety and Health Regulations.
	• Be sure to switch off the electric power source or any other power source before starting maintenance work, and ensure that the power is never accidentally switched on. Furthermore, make sure not to allow your clothes or any parts of the body to be caught by the chain or sprockets, or by any other nearby equipment.
Housings and safety covers	• Be sure to install a chain housing for type C and type B (see "Table of Lubrication Types").
	• For installing the roller chain coupling into a high-speed machine or heavily vibrating machine, coat the bolts with a loosening preventive.
	• Install a safety cover to prevent any unexpected flying of loosened bolts, or scattering of a broken housing or chain.
Inhibition of modification, re-use, and partial replacement	• Never partially replace or re-use the coupling as its strength will be lowered, causing damage or destruction. Furthermore, since the coupling is heat-treated, never modify the cotter holes or any other parts. When replacement is necessary, replace the roller chain coupling or housing as a set respectively.
Noise	• Noise during operation may be caused by malfunction and the unit may need to be replaced. Immediately switch off the power, and check the cause.

Lubrication of roller chain coupling

The lubrication of a roller chain coupling belongs to the following three types: A, B and C, depending on the speed of rotation used. Refer to the table of Max. Horsepower Ratings (P114).

1. Lubrication types

Type A	Greasing once a month.
Type B	Greasing every 1 ~ 2 weeks, or install a lubrication housing.
Type C	Be sure to install a housing, and replace grease every 3 months.

2. Grease

Since a roller chain coupling is usually used at high speed for a long time, grease must satisfy the following conditions.

- ○ Excellent in mechanical stability, oxidation stability and adhesion.
- ○ Grease based on metallic soap: For low speed operation, grease based on sodium soap, i.e., fiber grease can be used, but for high speed operation (for lubrication type B and C), be sure to use grease based on lithium soap.

3. Greasing amount

Fill appropriate amount of grease in the housing in accordance with the following table.

Roller chain coupling No.	Required amount of grease kg
DID C-4012	0.10
DID C-4014	0.13
DID C-4016	0.17
DID C-5014	0.22
DID C-5016	0.26
DID C-5018	0.36
DID C-6018	0.5
DID C-6022	0.7
DID C-8018	0.9
DID C-8022	1.2

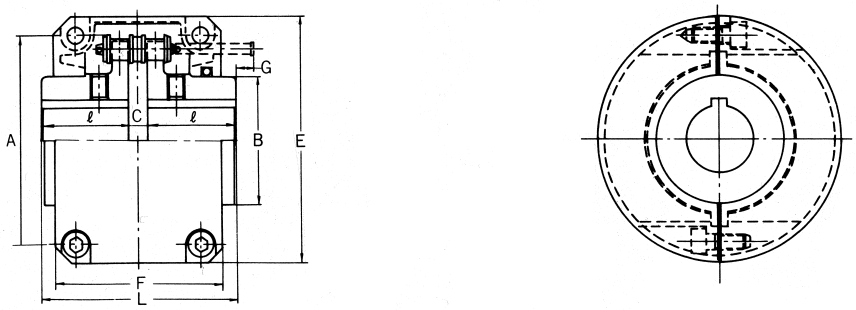

Figure shows a chain coupling with a housing.

Dimensions

Unit (mm)

Roller chain coupling No.		Applicable range of shaft dia.	Prepared hole dia.	E	F	A (max.)	L	ℓ	C	B	G	Set screw	Max. allowable torque of under 50rpm		Allowable rotation (r/min)	Approx. weight (kg)	Moment of inertia ×10⁻³ kg·m	GD² ×10⁻³ kgf·m²
DID	JIS												kN·m	kgf·m				
DID C-4012	4012	11～ 22	10	75	75	61	79.4	36	7.4	35	9	M 6	0.249	25.4	4,800	1.1	0.55	2.20
DID C-4014	4014	14～ 28	10	84	75	69	79.4	36	7.4	43	9	M 6	0.329	33.6	4,800	1.3	0.97	3.85
DID C-4016	4016	16～ 32	14	92	75	77	87.4	40	7.4	50	6	M 6	0.419	42.8	4,800	1.85	1.44	5.76
DID C-5014	5014	16～ 35	14	102	85	86	99.7	45	9.7	53	11	M 8	0.620	63.3	3,600	2.7	2.80	11.2
DID C-5016	5016	18～ 40	14	111	85	96	99.7	45	9.7	60	11	M 8	0.791	80.7	3,600	3.25	3.70	14.8
DID C-5018	5018	18～ 45	14	122	85	106	99.7	45	9.7	70	11	M 8	0.979	99.9	3,000	4.25	5.63	22.5
DID C-6018	6018	22～ 56	18	142	106	128	123.5	56	11.5	85	15	M10	1.81	185	2,500	7.3	13.73	54.9
DID C-6022	6022	28～ 75	18	167	106	152	123.5	56	11.5	110	15	M10	2.61	267	2,500	11.6	29.5	118
DID C-8018	8018	32～ 80	23	186	130	170	141.2	63	15.2	115	27	M12	3.92	400	2,000	16.15	52.0	208
DID C-8022	8022	40～100	28	220	130	203	157.2	71	15.2	140	19	M12	5.64	576	1,800	24.3	111	444

Note: 1. Dimension G indicates the required margin for assembling and de-assembling of the roller chain coupling.
2. Allowable rotation is applicable only when the housing is mounted.
3. The weight of the housing and grease is included in Approx. weight and GD².

Selection of roller chain coupling

1. Selection by drive performance

1. Based on the type of motor, operation time per day, and the type of load, obtain the service factor in the table of service factors.
2. Multiply the power (kW) to be transmitted, by the service factor identified in the following table, to obtain a corrected power to be transmitted (kW).
   Transmission power (kW)(Service factor
   = Corrected transmission power (kW)

Table of Service Factor

Type of load	Operating time/day	Source of power		
		Electric motor or turbine	Steam engine/ gasoline engine (with 4 cylinders or more)	Diesel engine/ gas engine
Load variation, impact, start torque is small (No reverse)	8 hrs or less	1.0	1.5	2.0
	8-16 hrs	1.5	2.0	2.5
	16 hrs or more	2.0	2.5	3.0
Load variation, impact is at medium level (No reverse)	8 hrs or less	1.5	2.0	2.5
	8-16 hrs	2.0	2.5	3.0
	16 hrs or more	2.5	3.0	3.5
Load variation, impact, start torque is large, (No reverse)	8 hrs or less	2.0	2.5	3.0
	8-16 hrs	2.5	3.0	3.5
	16 hrs or more	3.0	3.5	4.0

Note: Service factor of 8 hours or less to be applied regardless of operation time when the revolution is under 50 r/min.

3. Select a roller chain coupling in the drive performance (kW ratings) table: Identify the chain coupling number when the transmission power starts to exceed the corrected transmission power (calculated in 2.) according to the motor rpm.
4. When the shaft diameter is within the range of the selected roller chain coupling shaft diameter, select the coupling. When the shaft diameter exceeds the maximum shaft diameter of the roller chain coupling, select a one size larger coupling.
   A table of ANSI key slot dimensions is shown on the following page.

2. Selection when connected with an electric motor directly

Low voltage three-phase squirrel-cage induction motor (ANSI standard)			Roller chain coupling No.
Output (kW)		Shaft dia. (mm)	
4 poles	6 poles	E type	
0.4	—	14	**DID C-4012**
0.75	0.4	19	
1.5	0.75	24	**DID C-4016**
2.2	1.5	28	
3.7	2.2	28	
5.5	3.7	38	**DID C-5016**
7.5	5.5	38	
11	7.5	42	**DID C-5018**
—	11	42	

Note: 1. Drive performance selecting method to be applied when the output of motor exceeds 15 kW.
2. Table of dimensions of roller chain coupling is applied when the shaft diameter of motor is not given in the table above.

Drive performance (kW ratings)

Unit (kW)

Roller chain coupling No.	Max. allowable torque under 50 r/min		Number of revolution (r/min)																								
	kN·m	kgf·m	1	5	10	25	50	100	200	300	400	500	600	800	1000	1200	1500	1800	2000	2500	3000	3600	4000	4800	5200	6000
DID C-4012	0.249	25.4	0.03	0.13	0.26	0.65	1.31	2.00	3.11	4.06	4.91	5.72	6.48	7.94	9.33	10.6	12.6	14.5	15.7	18.9	21.9	25.6	28.1	33.0		
DID C-4014	0.329	33.6	0.03	0.17	0.35	0.86	1.73	2.65	4.12	5.37	6.50	7.56	8.58	10.5	12.3	14.1	16.7	19.2	20.8	25.0	29.0	33.9	37.1	43.6		
DID C-4016	0.419	42.8	0.04	0.22	0.44	1.10	2.20	3.38	5.25	6.84	8.28	9.64	10.9	13.3	15.7	17.9	21.2	24.5	26.6	31.8	37.0	43.2	47.3	55.6		
DID C-5014	0.620	63.3	0.07	0.33	0.65	1.63	3.25	4.99	7.75	10.1	12.2	14.2	16.1	19.7	23.2	26.5	31.4	36.1	39.3	47.0	54.7	63.8				
DID C-5016	0.791	80.7	0.08	0.41	0.83	2.07	4.14	6.35	9.88	12.8	15.5	18.1	20.5	25.1	29.5	33.8	40.0	46.1	50.0	59.9	69.7	81.3				
DID C-5018	0.979	99.9	0.10	0.51	1.03	2.57	5.13	7.87	12.2	15.9	19.3	22.4	25.4	31.1	36.6	41.8	49.5	57.0	62.0	74.2	86.3					
DID C-6018	1.81	185	0.19	0.95	1.91	4.77	9.54	14.6	22.7	29.6	35.8	41.7	47.3	57.9	68.1	77.8	92.1	106	115	138						
DID C-6022	2.61	267	0.27	1.37	2.74	6.86	13.7	21.0	32.7	42.6	51.6	60.0	68.1	83.4	97.9	112	132	152	165	198						
DID C-8018	3.92	400	0.41	2.06	4.11	10.2	20.6	31.5	49.0	63.8	77.3	89.9	102	124	146	167	198	228	248							
DID C-8022	5.64	576	0.59	2.96	5.91	14.8	29.6	45.3	70.4	91.8	111	129	146	179	211	241	285	329	357							
Type of lubrication			A		B			C																		

Note: Please refer to P133 for type of lubrication.

DID C-Top (Chain Cover) PAT.

DID C-Top is a plastic cover for chains that can be easily attached. It has sufficient load strength for chains conveying goods. Unlike conventional plastic chains, it can be used under high tension as stainless steel chains. It is an ideal solution for the use that requires the strength of steel chains free from concerns of damaging, soiling, and jamming of products. It also prevents operators from being caught by the chains. It can also be used as the cover for chains used for elevating devices such as multilevel parking machines.

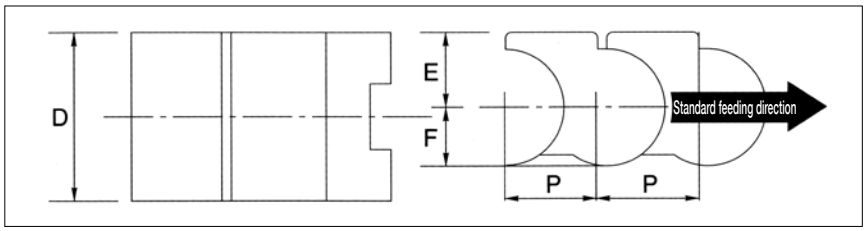

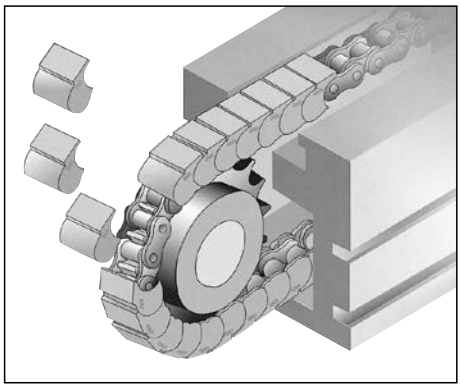

Note: Stock product

Dimensions

Unit (mm)

Cover No.	Dimension (mm)				Weight (g/link)
	P	D	E	F	※A, B
DID CT-40	12.70	27	10	7.6	4.5
DID CT-50	15.88	32	12	9.5	7.6
DID CT-60	19.05	37	14	11.2	11.5

●Material: POM ●200/package

Live load

DID CT-40	6kg/pitch
DID CT-50	8kg/pitch
DID CT-60	10kg/pitch

Applicable chains

Can be attached to chains corresponding to ANSI #40, 50, 60.

Sprocket teeth number

Use sprockets with 12 or more teeth.
※ Check the outer diameter of the hub.

Color

The standard color for this product is blue gray.

Chain Wear-elongation Check Gage

This gage checks the wear-elongation of chains.

- Check the chain elongation at a portion which is most frequently engaged with the sprockets (portion most likely to be worn).
- When the center of the pin of the chain to be measured reaches the arrow point, it means that the chain has been critically elongated. In this case, replace the chain.

※Use the gage to check the wear elongation of your chain.

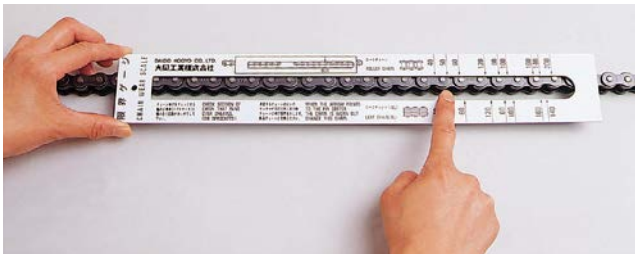

Note: Stock product

General terms for sprockets

Nominal number of sprockets

The nominal number of a sprocket is the same as the nominal number of the corresponding chain. For example, Chains such as DID50, DID50HK, and DID 50LD can be engaged with a sprocket DID50. It is followed by symbols and characters indicating the number of chain strands, the number of sprocket teeth, hub type, tooth head hardening, etc.

DID80-2-B-21NT - Induction hardened tooth heads

- DID80: Sprocket for DID80 duplex chain
- B: Hub type
- 21: 21 teeth

Diameter of prepared hole and shaft hole finishing

A standard sprocket for a single strand or double strand chain has a shaft hole prepared at a diameter stated in the table of dimensions. When you finish the shaft hole, machine it in reference to the outer diameter or root diameter. For reference, the table of ANSI key slot dimensions is shown on P114.

Hardening of tooth heads

The teeth of a sprocket must be tough and wear resistant as they are impacted when engaged with the rollers of the chain and worn by sliding with the rollers. When severe wear and large shocks are anticipated, sprocket made of carbon steel or cast steel should be used and high-frequency hardening should be conducted.
The standard sprockets DID40 to DID120 with a hub on only one side for single and double strand chains are induction-hardened even if the number of teeth is small. Whether the product is induction hardened or not is shown in the tables of dimensions of respective sprockets for your reference. Furthermore, in the following cases, induction-harden the teeth of the sprocket.

- The small sprocket has 20 or less teeth and is used at 1/6 or more of the maximum speed stated in the table of maximum kilowatt ratings.
- The small sprocket is used at a change gear ratio of 4:1 or more.
- The small sprocket is used for a low speed large load transmission as in cases of selection based on the "Low-speed selection".
- Sprockets are used in circumstances where the teeth are heavily worn.
- Sprockets are used under conditions where there are frequent starts and stops or sudden regular or reverse rotations.

General cautions

For selecting the number of teeth and speed ration of the sprocket, see "How to select proper chain" (P122~125).
For cautions for installing a sprocket on a shaft and replacement timing, see "Installation adjustment maintenance" (P129~139).

Types, construction and materials

Type	Construction		Material
Flat plane (**A** type)		Without hub. Standard specification does not include hardening of tooth heads.	Rolled steel for general structural purposes
Hub on one side only (**B**, **BW** type)	 Single  Double  Single  Double	A sprocket with a hub on one side only. The standard hub diameter and hub length are set relative to the shaft diameter range used. Two structural types are available: integral structure (B type) and welded structure (BW type).	Carbon steel for machine structural purposes Cast steel Rolled steel for general structural purposes
Hubs on both sides (**C** type)	 Single  Single  Double  Double	A sprocket with hubs on both sides. The standard hub diameter and hub length are set relative to the shaft diameter range used. Integral structure and welded structure types are available.	Carbon steel for machine structural purpose Cast steel

Dimensions of Sprocket

Sprockets can be classified into standard sprockets, HK sprockets and other sprockets.

1. Standard sprocket

Standard sprockets are ANSI sprockets which can be engaged with standard series roller chains. See P127 for dimensions.
There are two types of tooth profiles: U-tooth and S-tooth. See P120 for tooth profile.

2. HK sprocket

HK sprockets can be engaged with HK series roller chains, and those for single strand chains are identical to standard sprockets. However, sprockets for multiple strand chains are different from standard sprockets in sprocket tooth profile. See the corresponding table in P118.

3. Other sprockets

Other sprockets are designed according to the following calculation formulas to suit respective specialty chains. Calculation results of sprocket tooth profiles of main sprockets are shown in the corresponding table on P118.
The sprockets used for the following chains are the same as the standard sprockets in tooth gap form, but different in tooth thickness (sprocket tooth profile).

Sprockets identical in tooth gap form (different in tooth thickness)
DID40=DID415, DID420 DID50=DID520, DID525 DID60=DID630

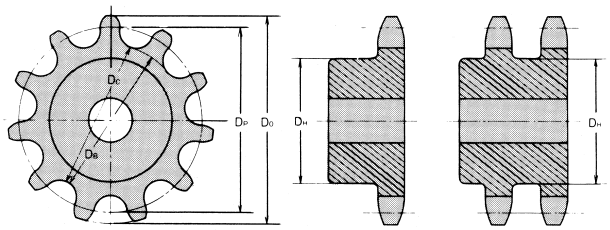

Sprocket tooth profile

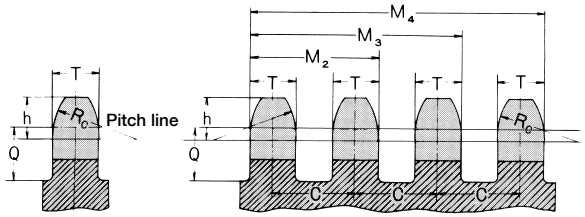

4. Calculation of sprocket dimensions

The dimensions of standard sprockets and other general sprockets are calculated as follows. At first, the diameters of sprockets are calculated from the following calculation formulas. Calculation formulas of tooth gap forms are shown on P119.

Next, sprocket tooth profile (the shape of the tooth depending on its thickness) is calculated from the following calculation formulas. (The values shown in the following pages were calculated by these formulas and regarded as the standard values.)

Calculation formulas of diameters (For simple calculation methods, see P124.)

Item	Formula
Pitch diameter (Dp)	$Dp=\frac{P}{\sin\frac{180^\circ}{N}}$ P: Chain pitch N: Number of sprocket teeth
Standard tip diameter (Do)	$Do=P\left(0.6+\cot\frac{180^\circ}{N}\right)$
Root diameter (D_B)	$D_B=Dp-Dr$ Dr: Roller outer diameter
Caliper diameter (Dc)	Even-numbered teeth $Dc=D_B$ Odd-numbered teeth $Dc=Dp\cos\frac{90^\circ}{N}-Dr$ $=P\frac{1}{2\sin\frac{180^\circ}{2N}}-Dr$
Maximum hub diameter and maximum groove diameter (D_H)	$D_H=P\left(\cot\frac{180^\circ}{N}-1\right)-0.76$

Calculation formulas of sprocket tooth profile

Item	Formula
Tooth width (T)	Single strand $T=0.93W-0.15$ Double or triple strands $T=0.90W-0.15$ Four or more strands $T=0.86W-0.30$ W: Inner width of chain
Transverse pitch (C)	$C=W+$ (4.22×Plate thickness)
Total tooth width (M)	$M=C$ (Number of chain rows$-1)+T$
Tooth face radius (Rc)	$Rc\fallingdotseq1.063P$ (Minimum value)
Center position of Rc (h)	$h\fallingdotseq0.5P$ P: Chain pitch
Depth of face (groove) from pitch line to maximum hub diameter (Q)	$Q\fallingdotseq0.5P$

Standard sprocket tooth profile

Unit (mm)

Sprocket No.	Dimensions of simplex and multiplex sprocket											
	Center position of Rc **h**	Radius of tooth form (Min.) **Rc**	Depth of slot **Q**	Transverse pitch **C**	Tooth width (Max.) **T**			Total tooth width				
					Simplex	Duplex/ Triplex	Multiplex	**M2**	**M3**	**M4**	**M5**	**M6**
DID 25	3.2	6.8	3.5	6.4	2.8	2.7	2.4	9.1	15.5	21.6	28.0	34.4
DID 35	4.8	10.2	5.2	10.1	4.3	4.1	3.8	14.2	24.3	34.1	44.2	54.3
DID 41	6.4	13.5	7.0	—	5.8	—	—	—	—	—	—	—
DID 40	6.4	13.5	7.0	14.4	7.2	7.0	6.5	21.4	35.8	49.7	64.1	78.5
DID 50	7.9	16.9	8.8	18.1	8.7	8.4	7.9	26.5	44.6	62.2	80.3	98.4
DID 60	9.5	20.3	10.6	22.8	11.7	11.3	10.6	34.1	56.9	79.0	101.8	124.6
DID 80	12.7	27.0	14.1	29.3	14.6	14.1	13.3	43.4	72.7	101.2	130.5	159.8
DID 100	15.9	33.8	17.6	35.8	17.6	17.0	16.1	52.8	88.6	123.5	159.3	195.1
DID 120	19.1	40.5	21.1	45.4	23.5	22.7	21.5	68.1	113.5	157.7	203.1	248.5
DID 140	22.2	47.3	24.7	48.9	23.5	22.7	21.5	71.6	120.5	168.2	217.1	266.0
DID 160	25.4	54.0	28.2	58.5	29.4	28.4	27.0	86.9	145.4	202.5	261.0	319.5
DID 180	28.6	60.8	31.7	65.8	33.1	32.0	—	97.8	163.6	—	—	—
DID 200	31.8	67.5	35.2	71.6	35.3	34.1	32.5	105.7	177.3	247.3	318.9	390.5
DID 240	38.1	81.0	42.3	87.8	44.1	42.7	40.7	130.5	218.3	304.1	391.9	479.7

Other sprocket tooth profile

Unit (mm)

Sprocket No.	Dimensions of simplex and multiplex sprocket							
	Center position of Rc **h**	Radius of tooth form (Min.) **Rc**	Depth of slot **Q**	Transverse pitch **C**	Tooth width (Max.) **T**		Total tooth width	
					Simplex	Duplex/ Triplex	**M2**	**M3**
DID 15	0.5	×20°	2.6	—	2.0	—	—	—
DID 06B	4.2	9.5	5.0	10.24	5.3	5.2	15.44	25.68
DID 083	6.4	13.5	7.0	—	4.5	—	—	—
DID 415	6.4	13.5	7.0	—	4.3	—	—	—
DID 420	6.4	13.5	7.0	—	5.8	—	—	—
DID 428	6.4	13.5	7.0	—	7.2	—	—	—
DID 520	7.9	16.9	8.8	—	5.8	—	—	—
DID 525	7.9	16.9	8.8	—	7.2	—	—	—
DID 630	9.5	20.3	10.6	—	8.7	—	—	—
DID 635	9.5	20.3	10.6	—	10.1	—	—	—

HK type sprocket tooth profile

Unit (mm)

Sprocket No.	Dimensions of simplex and multiplex sprocket							
	Center position of Rc **h**	Radius of tooth form (Min.) **Rc**	Depth of slot **Q**	Transverse pitch **C**	Tooth width (Max.) **T**		Total tooth width	
					Simplex	Duplex/ Triplex	**M2**	**M3**
DID 25H	3.2	6.8	3.5	—	2.8	—	—	—
DID 35HK	4.8	10.2	5.2	—	4.3	—	—	—
DID 40HK	6.4	13.5	7.0	—	7.2	—	—	—
DID 50HK	7.9	16.9	8.8	—	8.7	—	—	—
DID 60HK	9.5	20.3	10.6	—	11.7	—	—	—
DID 80HK	12.7	27.0	14.1	32.6	14.6	14.1	46.7	79.3
DID 100HK	15.9	33.8	17.6	39.1	17.6	17.0	56.1	95.2
DID 120HK	19.1	40.5	21.1	48.9	23.5	22.7	71.6	120.5
DID 140HK	22.2	47.3	24.7	52.2	23.5	22.7	74.9	127.1
DID 160HK	25.4	54.0	28.2	61.9	29.4	28.4	90.3	152.2
DID 180HK	28.6	60.8	31.7	69.2	33.1	32.0	101.2	170.4
DID 200HK	31.8	67.5	35.2	78.3	35.3	34.1	112.4	190.7
DID 240HK	38.1	81.0	42.3	101.2	44.1	42.7	143.9	245.1

Calculation formulas for diameters and tooth gap forms

Calculation formulas for diameters

Calculation of pitch diameter, tip diameter and caliper diameter

The basic dimensions of a sprocket suitable for a chain pitch of 1 mm are respectively called pitch diameter factor, tip diameter factor and caliper diameter factor. The respective factors for respective numbers of teeth are listed below. If these factors are multiplied by chain pitch, the basic dimensions of the corresponding sprocket can be obtained.

Example:
In the case of DID80 (25.40 mm pitch) with 35 teeth
Pitch diameter (Dp)
= P×Pitch diameter factor
= 25.40×11.1558≒283.36
Tip diameter (Do)
= P×Pitch diameter factor
= 25.40×11.711≒297
Root diameter (DB)
= Pitch diameter (Dp)−Roller diameter (Dr)
= 283.36−15.88=267.48
Caliper diameter factor (Dc)
= P×Caliper diameter factor−Roller diameter (Dr)
= 25.40×11.1446−15.88≒267.19

Note: Above sign (≒) means approximate value.

Number of teeth	Pitch dia. factor	Tip dia. factor	Caliper dia. factor	Number of teeth	Pitch dia. factor	Tip dia. factor	Caliper dia. factor	Number of teeth	Pitch dia. factor	Tip dia. factor	Caliper dia. factor	Number of teeth	Pitch dia. factor	Tip dia. factor	Caliper dia. factor
11	3.5495	4.006	3.5133	**39**	12.4275	12.987	12.4174	**67**	21.3346	21.911	21.3287	**95**	30.2449	30.828	30.2408
12	3.8637	4.332	——	**40**	12.7455	13.306	——	**68**	21.6528	22.230	——	**96**	30.5632	31.147	——
13	4.1786	4.657	4.1481	**41**	13.0635	13.625	13.0539	**69**	21.9710	22.548	21.9653	**97**	30.8815	31.465	30.8774
14	4.4940	4.981	——	**42**	13.3815	13.944	——	**70**	22.2892	22.867	——	**98**	31.1997	31.784	——
15	4.8097	5.304	4.7834	**43**	13.6995	14.263	13.6902	**71**	22.6074	23.185	22.6018	**99**	31.5180	32.102	31.5140
16	5.1258	5.627	——	**44**	14.0175	14.582	——	**72**	22.9256	23.504	——	**100**	31.8362	32.421	——
17	5.4422	5.949	5.4190	**45**	14.3356	14.901	14.3269	**73**	23.2438	23.822	23.2384	**101**	32.1545	32.739	32.1506
18	5.7588	6.271	——	**46**	14.6536	15.219	——	**74**	23.5620	24.141	——	**102**	32.4727	33.057	——
19	6.0755	6.593	6.0543	**47**	14.9717	15.538	14.9634	**75**	23.8802	24.459	23.8750	**103**	32.7910	33.376	32.7872
20	6.3925	6.914	——	**48**	15.2898	15.857	——	**76**	24.1984	24.778	——	**104**	33.1093	33.694	——
21	6.7095	7.235	6.6907	**49**	15.6079	16.176	15.5999	**77**	24.5167	25.096	24.5116	**105**	33.4275	34.013	33.4238
22	7.0267	7.555	——	**50**	15.9260	16.495	——	**78**	24.8349	25.415	——	**106**	33.7458	34.331	——
23	7.3439	7.876	7.3268	**51**	16.2441	16.813	16.2364	**79**	25.1531	25.733	25.1481	**107**	34.0641	34.649	34.0604
24	7.6613	8.196	——	**52**	16.5622	17.132	——	**80**	25.4713	26.052	——	**108**	34.3823	34.968	——
25	7.9787	8.516	7.9630	**53**	16.8803	17.451	16.8729	**81**	25.7896	26.370	25.7847	**109**	34.7006	35.286	34.6970
26	8.2962	8.836	——	**54**	17.1984	17.769	——	**82**	26.1078	26.689	——	**110**	35.0188	35.605	——
27	8.6138	9.156	8.5992	**55**	17.5166	18.088	17.5094	**83**	26.4261	27.007	26.4213	**111**	35.3371	35.923	35.3336
28	8.9314	9.475	——	**56**	17.8347	18.407	——	**84**	26.7443	27.326	——	**112**	35.6554	36.241	——
29	9.2491	9.795	9.2355	**57**	18.1529	18.725	18.1460	**85**	27.0625	27.644	27.0580	**113**	35.9437	36.560	35.9702
30	9.5668	10.114	——	**58**	18.4710	19.044	——	**86**	27.3807	27.962	——	**114**	36.2919	36.878	——
31	9.8845	10.434	9.8718	**59**	18.7892	19.363	18.7825	**87**	27.6990	28.281	27.6945	**115**	36.6102	37.197	36.6068
32	10.2023	10.753	——	**60**	19.1073	19.681	——	**88**	28.0172	28.599	——	**116**	36.9285	37.515	——
33	10.5201	11.073	10.5082	**61**	19.4255	20.000	19.4190	**89**	28.3355	28.918	28.3310	**117**	37.2467	37.833	37.2434
34	10.8380	11.392	——	**62**	19.7437	20.318	——	**90**	28.6537	29.236	——	**118**	37.5650	38.152	——
35	11.1558	11.711	11.1446	**63**	20.0618	20.637	20.0556	**91**	28.9720	29.555	28.9676	**119**	37.8833	38.470	37.8800
36	11.4737	12.030	——	**64**	20.3800	20.956	——	**92**	29.2902	29.873	——	**120**	38.2016	38.788	——
37	11.7916	12.349	11.7810	**65**	20.6982	21.274	20.6922	**93**	29.6085	30.192	29.6042				
38	12.1096	12.668	——	**66**	21.0164	21.593	——	**94**	29.9267	30.510	——				

Calculation formulas for tooth gap forms

As the most rational tooth gap forms in which the pressure angle changes in response to the elongation of a smoothly rotated roller chain with the lapse of service time, ANSI specify two types of tooth profiles: U-type and S-type. In general, S-type tooth profiles are adopted in accordance with ANSI, and our standard sprockets also have S-tooth profiles.

S-tooth form

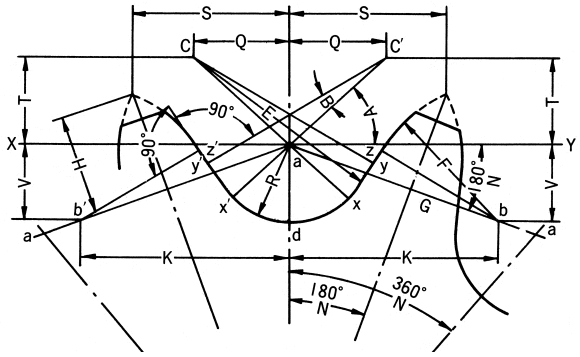

U-tooth form

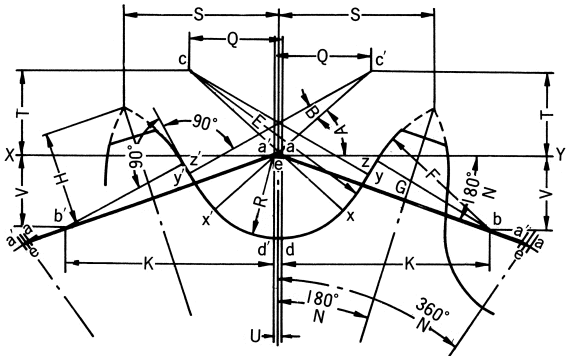

Item	Formula	Item	Formula
Ds (Tooth arc diameter)	$Ds=2R=1.055Dr+0.076$ Dr: Roller diameter	**G**	$G=ab=1.4Dr$ Point b is on the line drawn from point a on line xy at an angle of 180/N. (With U-tooth form, aa' is parallel to chordal pitch line e-e.)
R	$R=0.5025Dr+0.038$	**K**	$K=1.4Dr\cos\frac{180^\circ}{N}$
U (Pitch clearance)	$U=0.07\ (P-Dr)\ +0.051$ (S-tooth form: U=0) P: Chain pitch	**V**	$V=1.4Dr\sin\frac{180^\circ}{N}$
A	$A=35^\circ+\frac{60^\circ}{N}$ N: Number of teeth	**F**	$F=Dr\left\{0.8\cos\left(18^\circ-\frac{56^\circ}{N}\right)+1.4\cos\left(17^\circ-\frac{64^\circ}{N}\right)-1.3025\right\}-0.038$
B	$B=18^\circ-\frac{56^\circ}{N}$	**H**	$H=\sqrt{F^2-\left(1.4Dr-\frac{Pt}{2}+\frac{U}{2}\cos\frac{180^\circ}{N}\right)^2}+\frac{U}{2}\sin\frac{180^\circ}{N}$ $Pt=$ Chordal pitch equal to chain pitch $=P\ \left(1+\frac{Ds-Dr}{Dp}\right)$ (S-tooth form:a-a, U-tooth form:e-e)
ac	$ac=0.8Dr$	**S**	$S=\frac{Pt}{2}\cos\frac{180^\circ}{N}+H\sin\frac{180^\circ}{N}$
Q	$Q=0.8Dr\cos\left(35^\circ+\frac{60^\circ}{N}\right)$	Approximate outer diameter of sprocket	Approximate outer diameter of sprocket (at J=0.3p) $=Pt\ \left(0.6+\cot\frac{180^\circ}{N}\right)$
T	$T=0.8Dr\sin\left(35^\circ+\frac{60^\circ}{N}\right)$	Outer diameter of sprocket when sprocket tooth heads are sharp	Outer diameter of sprocket with sharp tooth head (at J=H) $=Pt\cot\frac{180^\circ}{N}+2H$ (In this case, generally this formula is corrected to obtain the outer diameter.)
E	$E=cy=1.3025Dr+0.038$	Maximum pressure angle	Maximum pressure angle $=xab=35^\circ-\frac{120^\circ}{N}$ (Pressure angle in the case of a new chain)
$\overline{xy}$	$\overline{xy}=(2.605Dr+0.076)\sin(9^\circ-\frac{28^\circ}{N})$	Minimum pressure angle	Minimum pressure angle $=xab-B=17^\circ-\frac{64^\circ}{N}$
yz	$yz=Dr\left\{1.4\sin(17^\circ-\frac{64^\circ}{N})-0.8\sin(18^\circ-\frac{56^\circ}{N})\right\}$	Average pressure angle	Average pressure angle $=26^\circ-\frac{92^\circ}{N}$

1. The description in this chapter can be applied when a chain is endlessly engaged for transmission with two sprockets parallel in their shafts and accurate in alignment as illustrated below.

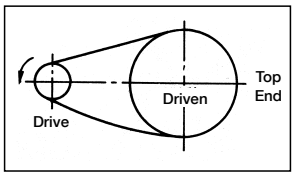

2. Consult us when a chain is to be used for lifting, pulling dollies or being engaged with a pin gear, etc.
3. When there are any regulations or guidelines concerning the selection of chains, select a chain in accordance with such regulations and the maximum kilowatt ratings (Drive performance) table described below, and choose the one with a larger allowance.

How to Select the Proper Chain

The chain can be selected according to the following two methods:
(1) Selection by drive performance
(2) Low-speed selection

The drive performance method considers not only chain tension but also the shock load on the bushings and rollers due to the engagement between the sprockets and the chain, and the wear of pins, bushings and rollers.

The slow-speed method is applied when the chain is operated at a speed of 50 rpm or less. In general, the chain selected by this method is subject to conditions more severe than that selected according to the selection by drive performance. Thus, carefully assess the conditions when selecting with this method.

Selection by drive performance

First, the following information is required.
①Power to be transmitted (kW)
②Speeds of driving shaft and driven shaft (speed ratio) and shaft diameters
③Center distance between driving shaft and driven shaft

(a) Correction of power to be transmitted (kW)

Correction must be made to obtain the actual power to be transmitted as the level of load fluctuates depending on the machine and power source used, affecting the expected service life (for example, 15,000 hours in the case of capacities shown in the table of maximum kilowatt ratings). The service factor shown in Table 1 is an indicator of the load level. The power to be transmitted (kW) is multiplied by the corresponding service factor to obtain a corrected power.

Corrected power (kW) =
Power to be transmitted (kW) × Service factor

Table 1. Service factor

Type of input power / Type of load	Electric motor or turbine	Inner combustion engine	
		With multiple cylinders or hydraulic drive	Without multiple cylinders nor hydraulic drive
Smooth (agitator, centrifugal blower, feeder, textile machines, etc.)	1.0	1.0	1.2
Moderate shock (general work machines, compressors, machining tools, dryers, etc.)	1.3	1.2	1.4
Large shock (presses, civil engineering or mining machines, vibration machines, machines with reverse impact, etc.)	1.5	1.4	1.7

(b) Selection of chain size and the number of teeth of small sprocket

Use of simple selection chart
The number of teeth of small sprocket and the chain to be used are tentatively decided with reference to the simple selection chart (P124~P125) and the corrected power (P122~P123).

Using the table of maximum kilowatt ratings
If the results tentatively decided as described above are close to the design values, the number of teeth of small sprocket can be finalized with reference to the table of maximum kilowatt ratings. The maximum kilowatt ratings are established anticipating that an endless chain with 100 links has a life of 15,000 hours under the following conditions. (That is, the breaking of the chain and the loss of bushings and rollers do not occur at a wear elongation of 2 percent or less.)
①Operation is carried out in ambient temperature (-10°C~ +60°C) free from dust and dust-containing liquid.
②There is no corrosive gas, or humidity, etc. to adversely affect the chain.
③Proper lubrication is maintained.
④The chain is used under conditions of a low start-stop frequency and a fairly stable load.

In the case of multiplex chain

Select a multiplex chain when the capacity of a simplex chain is insufficient. The maximum kilowatt rating of a multiplex chain cannot be obtained by multiplying the maximum kilowatt rating of a simplex chain by the number of multiplex chain since the loads are not evenly distributed between the strands. For the correction factor in this case, see the multiplex chain factor table. Our standard HI-PWR-S Roller Chains and HI-PWR-SHK Roller Chains are available up to triplex.

Table 2. Multiplex chain factor

Number of roller chain stand	Multiplex chain factor
2	1.7
3	2.5
4	3.3
5	3.9

kW rating of multiplex chain =
kW rating of simplex chain × multiplex chain factor

Remarks for determining the number of teeth of small sprocket

When a chain of the minimum chain pitch required maximum kilowatt rating is selected, relatively silent and smooth transmission can be achieved, and the equipment can be compact.

However, considering smooth chain transmission, the wear of the chain and sprockets, etc., it is desirable that the sprocket have 15 or more teeth, and preferably an odd number. Avoid 12 teeth, 14 teeth and 16 teeth. When the sprocket has 12 or less teeth, the chain and sprocket heavily vibrate and are extremely worn, and transmission is not smooth. Likewise, avoid a small number of teeth as much as possible except in the case of low speed without shock.

Shaft diameter

After the number of teeth of small sprocket is determined, multiply it by the speed ratio, and confirm whether the required shaft bore can be secured in reference to the maximum shaft bore in the table of sprocket dimensions. If the required shaft bore is larger than the maximum shaft bore, increase the number of teeth, or choose a one size larger chain.

(c) Selection of the number of teeth of large sprocket

When the number of teeth of small sprocket is determined, multiply it by the speed ratio to determine the number of teeth of large sprocket.

In general, increasing the sprocket teeth number makes the chain bending angle smaller, which increases durability and enhances transmission efficiency. However, if the number of teeth is too large, slight elongation tends to cause the chain to ride over the sprocket, so keep the maximum number of teeth at 114 or less.

Speed ratio

A speed ratio refers to the ratio of the speed of the driving shaft to the speed of the driven shaft, and usually a speed ratio of 7:1 or less is safe. If the speed ratio is larger than this ratio, the take-up angle of the chain on the small sprocket decreases, and chain jumping or abnormal wear of sprocket are likely to occur. If a large speed ratio is necessary, two-step speed change may be necessary.

Low-speed selection

The low-speed selection method is used when the chain operation speed is 50 m/min or less and there is no worry of wear elongation and shock fracture of rollers and bushings.

In low-speed selection, the chain is selected in reference to the tensile fatigue strength of the chain. Therefore, a chain selected according to this method will be subject to more severe conditions than one selected according to the selection by drive performance method. When the Low-speed selection method is used, special care must be exercised. The Low-speed selection method cannot be used for the connecting links and offset links.

(a) How to obtain corrected chain tension

Corrected chain tension = (Maximum tension acting on chain kN (kgf)) × (service factor)

See Table 1 on the previous page.

To calculate the corrected chain tension, identify the exact maximum tension acting on the chain. The shock is considered to some extent in the service factor, but it is not absolute. Also consider the increase of tension by the inertia of equipment caused by starting and stopping.

(b) Comparison with the maximum allowable tension of chain

Using the maximum allowable tension in the table of chain dimensions, sprocket tooth factor and rotating factor of the small sprocket listed below, obtain the corrected maximum allowable tension from the following formula:

Corrected maximum allowable tension = (Max. allowable tension) × (Sprocket tooth factor) × (Rotating factor) × (CL/OL factor)

See the table of chain dimensions. See Table 1. See Table 2. See Table 3.

If the corrected maximum allowable tension is larger than the corrected chain tension, you can select the chain.

For the number of teeth and speed of small sprocket not stated in Table 1 or 2, obtain the sprocket tooth factor and rotating factor by linear interpolation.

Table 1. Sprocket tooth factor

Number of tooth on small sprocket	Sprocket tooth factor C_{NT}
9 T	0.903
11 T	0.923
13 T	0.939
15 T	0.952
20 T	0.978
23 T	0.990
26 T or larger	1.00

Table 2. Rotating factor

Small sprocket rpm	Rotating factor C_V
10 rpm or less	1.00
20 r/min	0.933
30 r/min	0.896
40 r/min	0.871
50 r/min	0.851
100 r/min	0.794
200 r/min	0.741

Table 3. Connecting/offset link factor

			factor
Connecting link	Clearance fit	RJ, CJ (~DID40)	0.7
		RJ, CJ (DID50~)	1.0
	Interference fit	FJ, HJ	1.0
Offset link	1 pitch	OJ	0.7
	2 pitch	2POJ	0.8

Chart for chain selection
DID standard roller chain

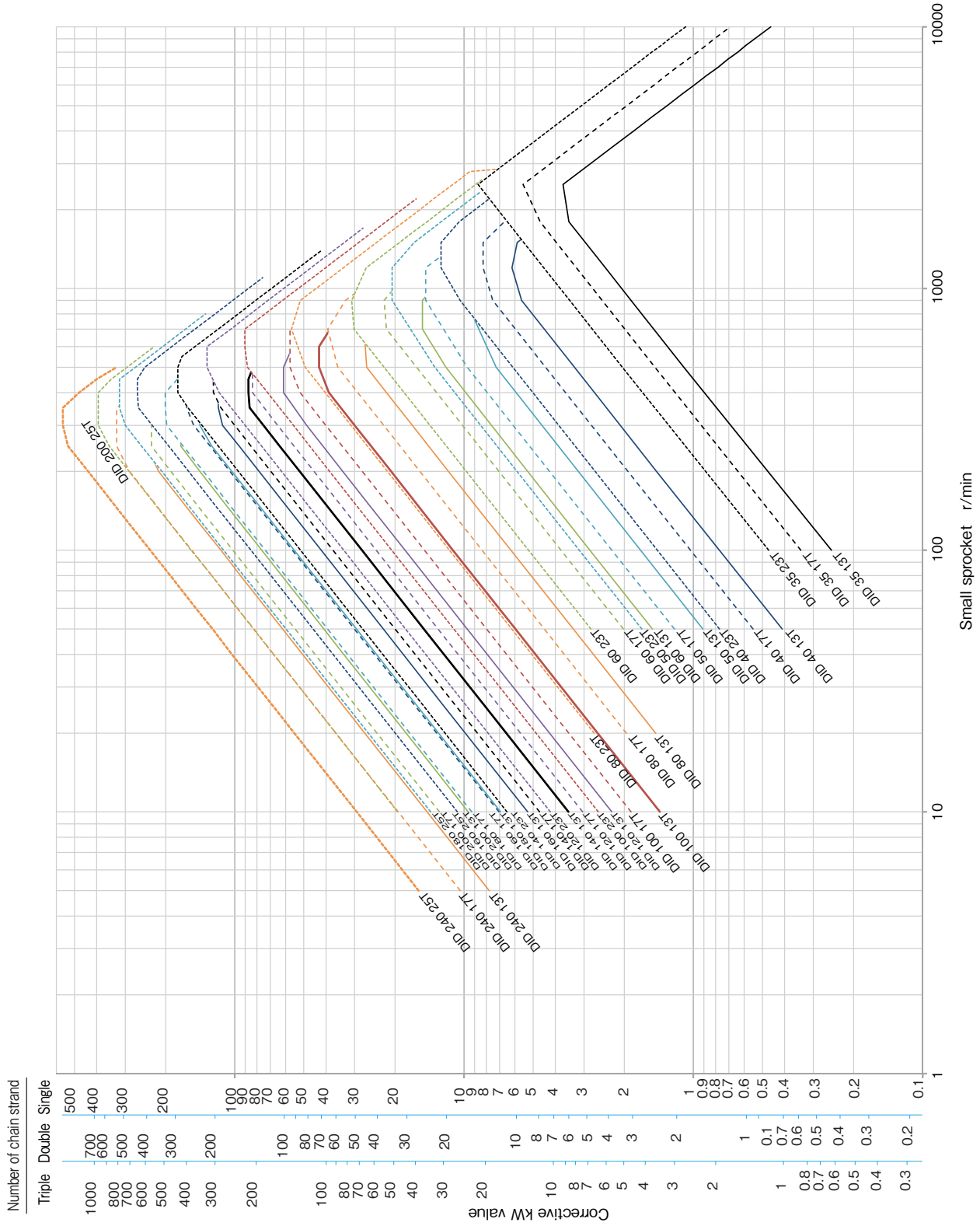

(How to select a chain)

In the case that the corrective kW is 10kW and sprocket rpm is 100 rpm:
the intersection of the corrective kW value (vertical axis) and the number of small sprocket tooth (horizontal axis) shows "DID100" for roller chain size and 17 for the number of the small sprocket teeth.

Chart for chain selection
DID HI-PWR-S roller chain

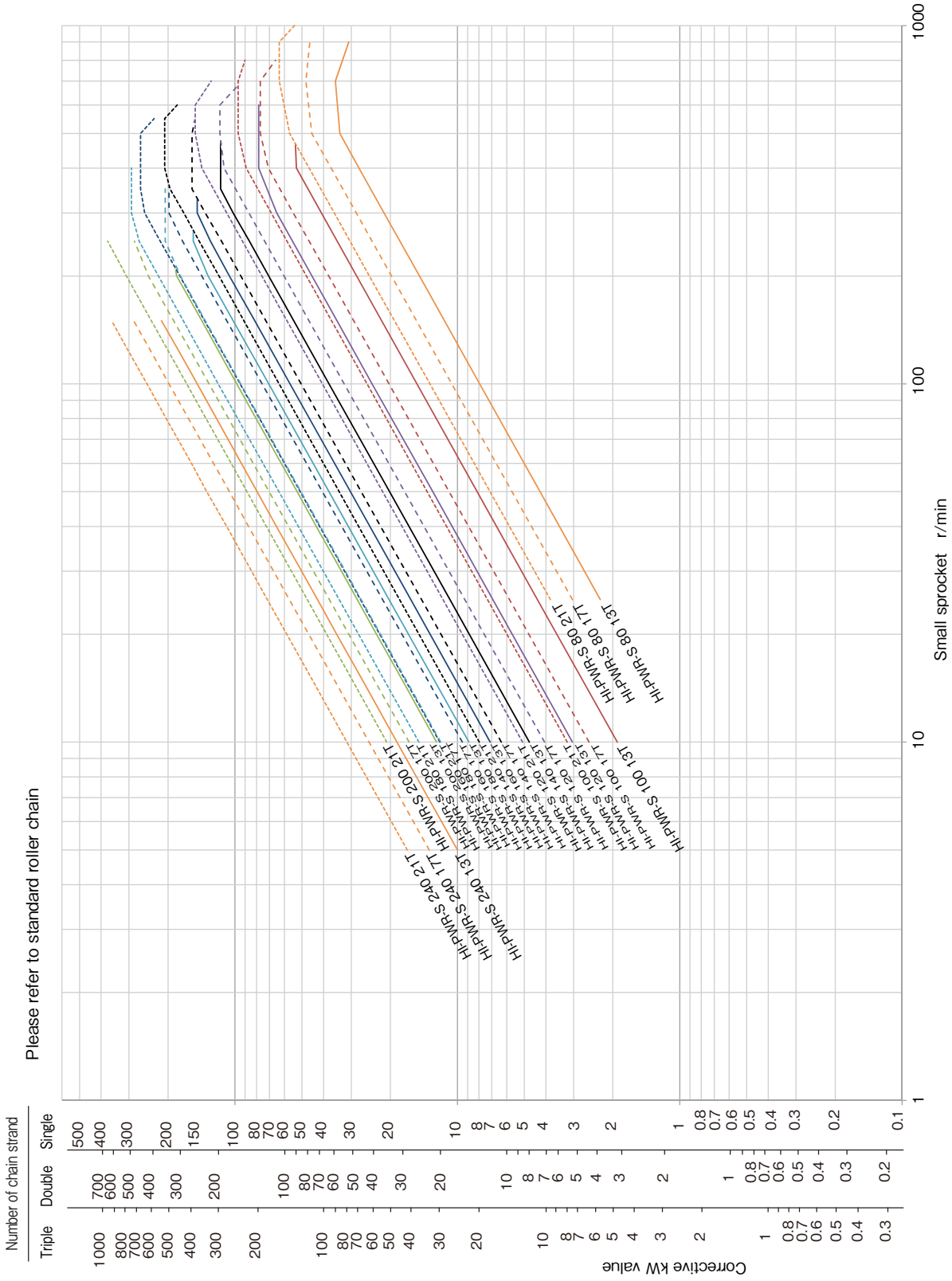

Please refer to P99 for how to use this chart.

Chain Selection by Temperature

This is a chain selection method taking deterioration of strength in relation to temperature into consideration. Please use appropriate lubricant for the temperature at which the chain is to be used. Consult us for details.

1. Effects of temperature on the chains

1.1 Effects of high temperature
1) Increased wear caused by decrease in hardness
2) Increased elongation caused by softening
3) Lubricant degradation, defective flexion caused by carbonization
4) Increase in wear and defective flexion caused by development of scales

1.2 Effects of low temperature
1) Decrease in resistance to shock caused by low temperature brittleness.
2) Defective flexion caused by lubrication oil coagulation.
3) Defective flexion caused by adhesion of frost and ice.
4) Rusting caused by water-drops.

2. Kilowatt ratings according to temperature

Temperature	Roller Chain		Low Temperature resistance (TK)
	DID60 or smaller	DID80 or larger	
250°C and above	NA	NA	NA
200°C to less than 250°C	Catalog value×0.50	Catalog value×0.50	NA
150°C to less than 200°C	Catalog value×0.75	Catalog value×0.75	NA
80°C to less than 150°C	Catalog value	Catalog value	Catalog value (Max. allowable load at normal temperature)
-10°C to less than 80°C	Catalog value	Catalog value	Catalog value (Max. allowable load at normal temperature)
-30°C to less than -10°C	Catalog value×0.33	Catalog value×0.50	Catalog value (Max. allowable load at normal temperature×0.70)
-40°C to less than -30°C	Catalog value×0.25	Catalog value×0.33	Catalog value (Max. allowable load at normal temperature×0.58)
-50°C to less than -40°C	NA	Catalog value×0.25	Catalog value×0.46 (Max. allowable load at normal temperature×0.46)
-60°C to less than -50°C	NA	NA	Catalog value×0.41 (Max. allowable load at normal temperature×0.41)
-60°C or less	NA	NA	NA

※Please be aware that ambient temperature and the temperature of chains may differ.

3. Chain Selection according to Temperature
See slow-speed selection (p123) for use at extreme temperatures other than normal temperature.
(Chain speed=50m/min or less)

4. Use of Stainless Steel Chains (SS, SSK) at high temperatures
Stainless steel chains (SS, SSK) can be used up to 400°C, but be aware that the ambient temperature and the chain temperature may differ. The strength of the chain decreases as the temperature rises. Especially at high temperatures, the higher the temperature rises, the chain will rupture by a lower load (creep rupture).
In addition, defective flexion or defective chain revolution occurs due to heat expansion. In order to prevent such problems, adjust the clearance between chains. Consult us when using chains at 400°C or higher.
Chains cannot be used at 700°C or higher.

Chain Length and Sprocket Center Distance

Required length of roller chain

Using the center distance between the sprocket shafts and the number of teeth of both sprockets, the chain length (pitch number) can be obtained from the following formula:

$$Lp=\frac{N_1+N_2}{2}+2Cp+\frac{\{(N_2-N_1)/2\pi\}^2}{Cp}$$

Lp : Overall length of chain (Pitch number)
N_1 : Number of teeth of small sprocket
N_2 : Number of teeth of large sprocket
Cp: Center distance between two sprocket shafts (Chain pitch)

$\{(N_2-N_1)/2\pi\}^2$ can be obtained from the following table.

The Lp (pitch number) obtained from the above formula hardly becomes an integer, and usually includes a decimal fraction. Round up the decimal to an integer.
Use an offset link if the number is odd, but select an even number as much as possible.
When Lp is determined, re-calculate the center distance between the driving shaft and driven shaft as described in the following paragraph. If the sprocket center distance cannot be altered, tighten the chain using an idler or chain tightener shown on P.128.

Center distance between driving and driven shafts

Obviously, the center distance between the driving and driven shafts must be more than the sum of the radius of both sprockets, but in general, a proper sprocket center distance is considered to be 30 to 50 times the chain pitch. However, if the load is pulsating, 20 times or less is proper.
The take-up angle between the small sprocket and the chain must be 120° or more. If the roller chain length Lp is given, the center distance between the sprockets can be obtained from the following formula:

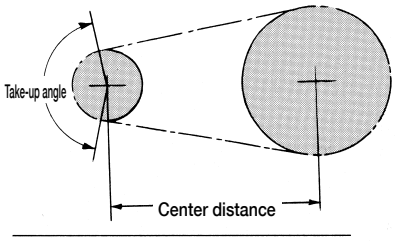

$$C_p=\frac{1}{4}\left\{L_p-\frac{N_1+N_2}{2}+\sqrt{\left(L_p-\frac{N_1+N_2}{2}\right)^2-\frac{2}{\pi^2}(N_2-N_1)^2}\right\}$$

C_p : Sprocket center distance (pitch number)
L_p : Overall length of chain (pitch number)
N_1 : Number of teeth of small sprocket
N_2 : Number of teeth of large sprocket

$\frac{2}{\pi^2}(N_2-N_1)^2$ can be obtained from the following table.

N_2-N_1	$\{(N_2-N_1)/2\pi\}^2$	N_2-N_1	$\{(N_2-N_1)/2\pi\}^2$	N_2-N_1	$\{(N_2-N_1)/2\pi\}^2$
1	0.03	35	31.03	69	120.60
2	0.10	36	32.83	70	124.12
3	0.23	37	34.68	71	127.69
4	0.41	38	36.58	72	131.31
5	0.63	39	38.53	73	134.99
6	0.91	40	40.53	74	138.71
7	1.24	41	42.58	75	142.48
8	1.62	42	44.68	76	146.31
9	2.05	43	46.84	77	150.18
10	2.53	44	49.04	78	154.11
11	3.07	45	51.29	79	158.09
12	3.65	46	53.60	80	162.12
13	4.28	47	55.96	81	166.19
14	4.97	48	58.36	82	170.32
15	5.70	49	60.82	83	174.50
16	6.49	50	63.33	84	178.73
17	7.32	51	65.88	85	183.01
18	8.21	52	68.49	86	187.34
19	9.14	53	71.15	87	191.72
20	10.13	54	73.86	88	196.16
21	11.17	55	76.62	89	200.64
22	12.26	56	79.44	90	205.17
23	13.40	57	82.30	91	209.76
24	14.59	58	85.21	92	214.40
25	15.83	59	88.18	93	219.08
26	17.12	60	91.19	94	223.82
27	18.47	61	94.25	95	228.61
28	19.86	62	97.37	96	233.44
29	21.30	63	100.54	97	238.33
30	22.80	64	103.75	98	243.27
31	24.34	65	107.02	99	248.26
32	25.94	66	110.34	100	253.30
33	27.59	67	113.71		
34	29.28	68	117.13		

N_2-N_1	$\frac{2}{\pi^2}(N_2-N_1)^2$	N_2-N_1	$\frac{2}{\pi^2}(N_2-N_1)^2$	N_2-N_1	$\frac{2}{\pi^2}(N_2-N_1)^2$
1	0.20	35	248.24	69	964.78
2	0.81	36	262.63	70	992.95
3	1.82	37	277.42	71	1021.52
4	3.24	38	292.62	72	1050.50
5	5.07	39	308.22	73	1079.88
6	7.30	40	324.23	74	1109.67
7	9.93	41	340.64	75	1139.87
8	12.97	42	357.46	76	1170.46
9	16.41	43	374.69	77	1201.47
10	20.26	44	392.32	78	1232.88
11	24.52	45	410.35	79	1264.69
12	29.18	46	428.79	80	1296.91
13	34.25	47	447.64	81	1329.54
14	39.72	48	466.89	82	1362.57
15	45.59	49	486.55	83	1396.01
16	51.88	50	506.61	84	1429.85
17	58.56	51	527.07	85	1464.09
18	65.66	52	547.95	86	1498.74
19	73.15	53	569.22	87	1533.80
20	81.06	54	590.91	88	1569.27
21	89.37	55	612.99	89	1605.13
22	98.08	56	635.49	90	1641.41
23	107.20	57	658.39	91	1678.08
24	116.72	58	681.69	92	1715.17
25	126.65	59	705.40	93	1752.66
26	136.99	60	729.51	94	1790.55
27	147.73	61	754.03	95	1828.85
28	158.87	62	778.96	96	1867.55
29	170.42	63	804.29	97	1906.66
30	182.38	64	830.02	98	1946.18
31	194.74	65	856.17	99	1986.10
32	207.51	66	882.71	100	2026.43
33	220.68	67	909.66		
34	234.26	68	937.02		

Layout

When a roller chain is used, shaft positions can be arbitrarily determined. However, in principle, follow the illustration shown below. That is, if the chain is tensioned horizontally, keep the top tensioned. Avoid vertical transmission whenever possible. In an inevitable case, place the large sprocket at the bottom regardless of the direction of rotation.

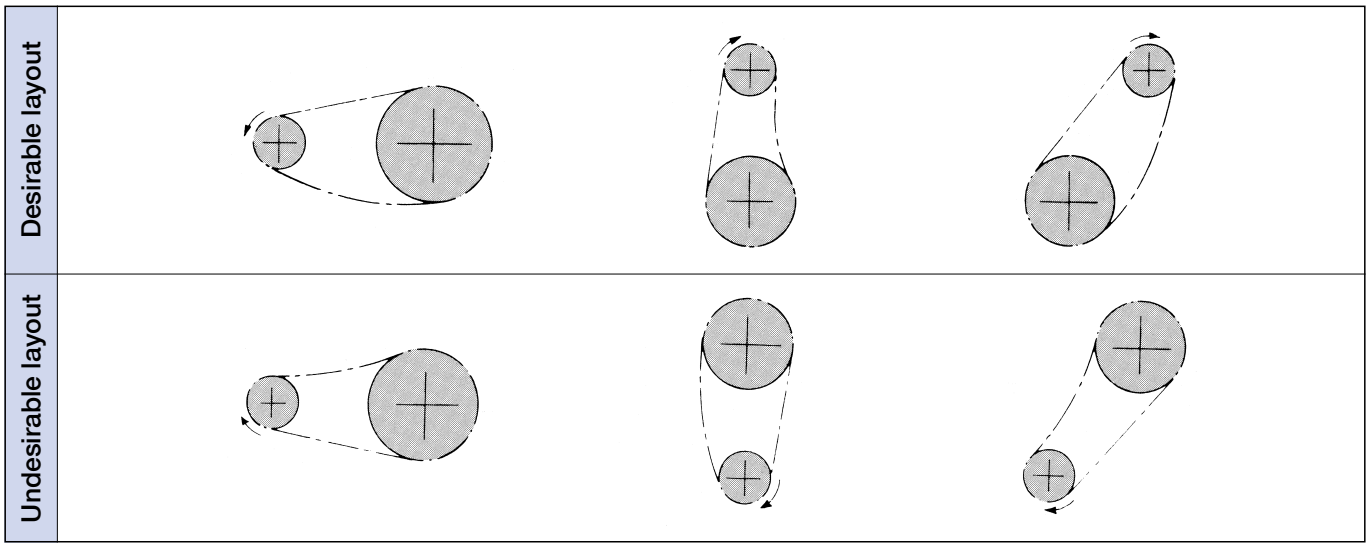

When the chain layout is undesirable:

- When the top is sagging and the sprocket center distance is short:
  As illustrated below, adjust the sprocket center distance shaft to eliminate the sag.

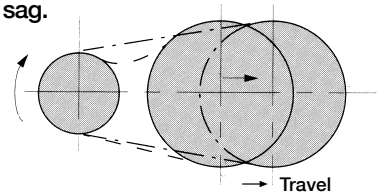

- When the top is sagging and the sprocket center distance is long:
  As illustrated below, install an idler from inside to eliminate the sag.

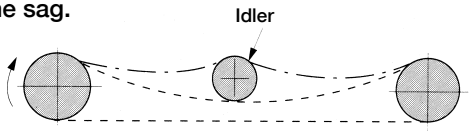

- When the chain is vertical or inclined:
  As illustrated below, eliminate the extra sag by a tensioner. In this case, a tensioner that automatically eliminates the sag gives better results.

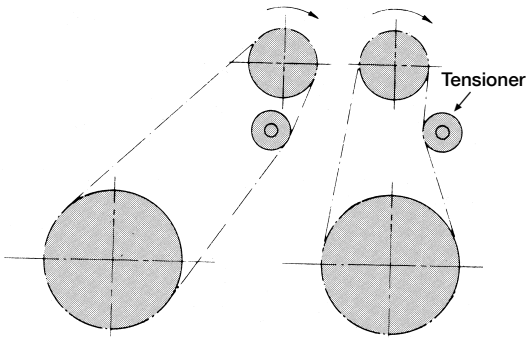

When a pulsating load acts in high speed operation:

The chain's vibration and the load impact frequency or chordal action may synchronize to amplify vibration on the chain. Since vibration affects the chain, take countermeasures to prevent vibration in the following measures:

- Change the chain speed.
- Increase chain tension. However, note that over-tensioning can shorten the life of the chain.
- Use an idler or tensioner to divide the span.

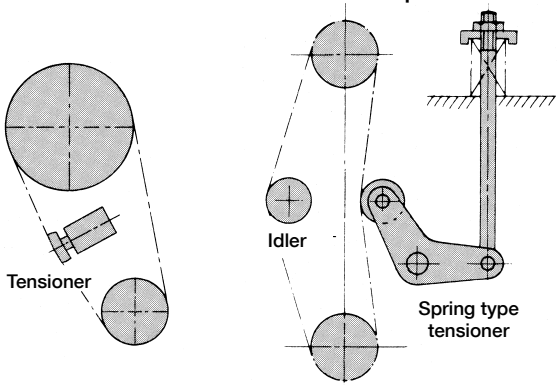

- Install a guide stopper to prevent vibration.

Note:
Chordal action refers to the vertical motion of chain caused when it is engaged with sprockets.

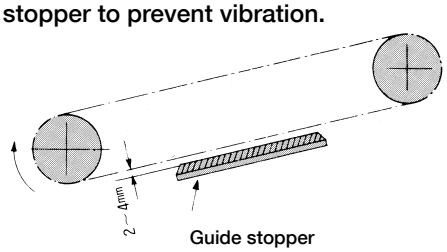

Installation

Installation of sprockets

For smooth transmission and extended life of the roller chain, it is important to correctly install proper sprockets. Use the following installation procedure.

1. Properly install a sprocket on a shaft, and fix it with a key to prevent it from rattling during operation. Also, place the sprocket as close as possible to the bearing.

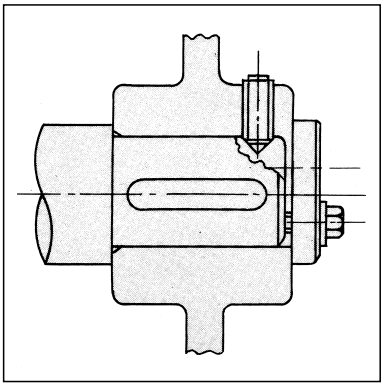

2. Adjust the shaft levelness to ± 1/300 or less using a level.

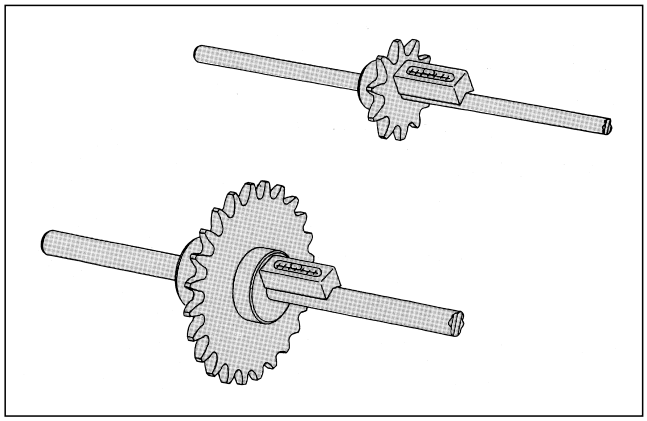

3. Adjust the shaft parallelism $\left(\frac{A-B}{L}\right)$ to ± 1/300 or less.

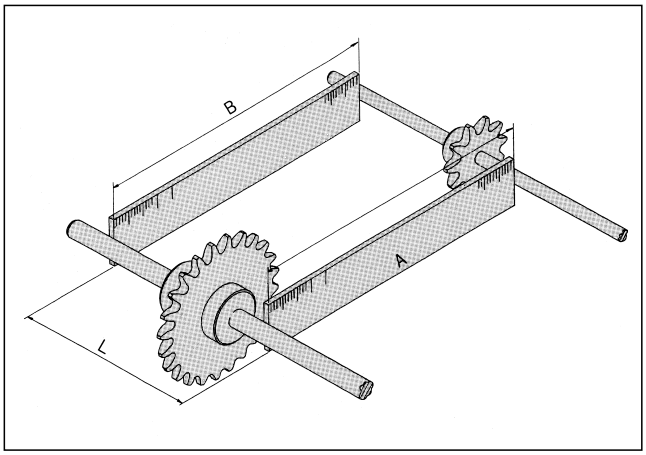

4. Adjust the level of driving and driven sprockets using a linear scale. (Also adjust the idler and the sprockets, or the tensioner and the sprockets in the same way.)

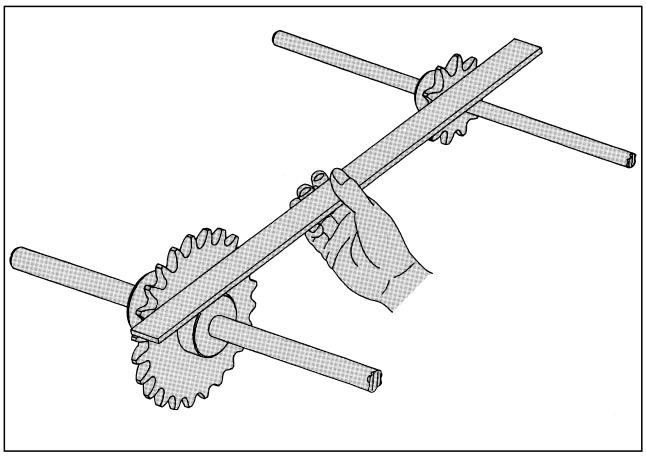

Keep the allowance δ in the range specified below.

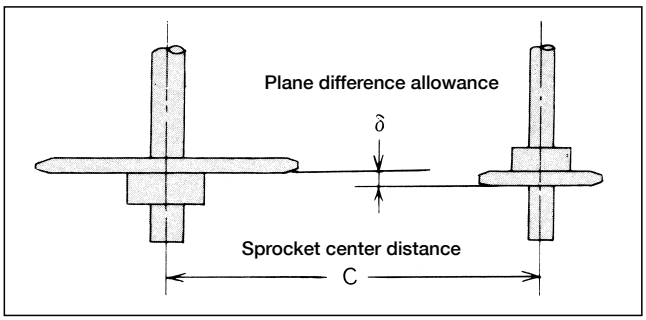

Sprocket center distance C	Allowance δ (mm)
1m or less	±1
1m～10m	±C（mm）／1000
10m or more	±10

Installation of roller chain

When connecting a roller chain with the sprockets, observe the following procedure. When the connecting link is not well lubricated, apply sufficient grease.

When using the sprocket teeth

1. Engage the chain with the sprockets so that both ends of the chain are on one of the sprockets, as shown in the following photo.
2. Insert connecting pins at the joint.
3. Fit a connecting plate, and fasten by a spring clip or cotters.

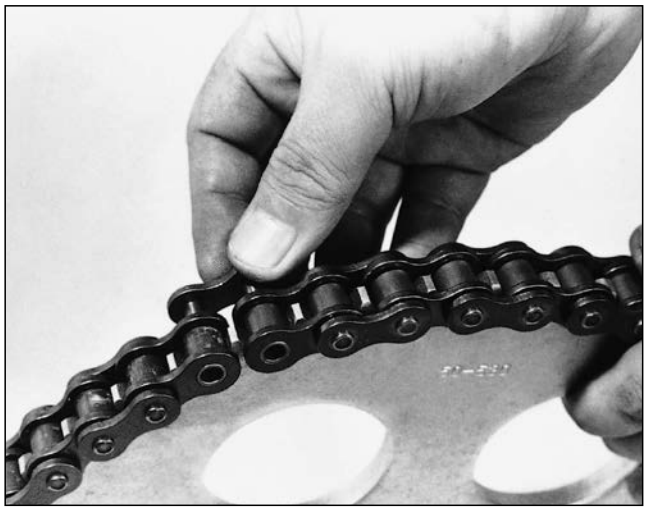

Pay extra attention not to damage the tooth heads of the sprocket.

When using tools

Cautions

1. When a connecting plate is fastened by a spring clip, apply the spring clip to the pin grooves of the connecting pins as illustrated below, and lock it using pliers, etc. As for the direction of spring clip insertion, keep the opening of the spring clip turned in the direction opposite to the direction of chain rotation, as illustrated below.

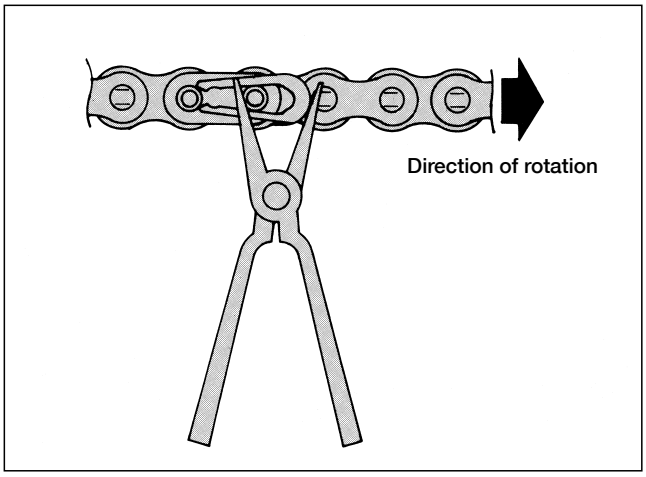

2. In circumstances where the sprocket center distance can hardly be adjusted, an odd number of links may be used. However, add one link, to use an even number of links and eliminate the sag by shifting a sprocket or installing an idler.
3. When an H-connecting link is used, pins must be driven into the connecting plate because of interference. In this case, ensure that the pair of pins are kept parallel to each other when inserted into the connecting plate. Never make the holes of the connecting plate larger or make the pins thinner for easier connection work. This applies also when a cotter type outer link (CP) is used instead of a connecting link.

How to connect X-ring/O-ring Chains

Remarks to connect general X-ring/O-ring Chains:

1. A connecting link of an X-ring/O-ring Chain for general application is pre-coated with grease at the pins. Before connection, confirm the grease on the surfaces of pins, and if the amount of grease is small, apply grease with bare hands. (If gloves are used, the grease will be absorbed by the gloves.)
   Example: When the connecting link (I) of an X-ring/O-ring chain for general application is shipped, X-ring/O-ring are fitted at the roots of the pins. If the X-ring/O-ring come loose due to vibration during transport, refit the X-ring/O-ring in to the roots of the pins. In this case, be sure to return the grease collected at the roots of the pins to the central surfaces of the pins, more at portion A than at portions B shown in the above illustration. (Portions A is worn because of sliding with the bushings.)

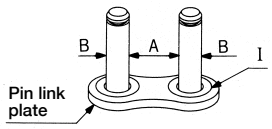

2. The chain can be most easily connected on the teeth of a sprocket. Engage the links at both ends of the chain with the sprocket teeth and fit connecting pins. If the sprocket can be moved, the chain can also be connected on the loosened side.

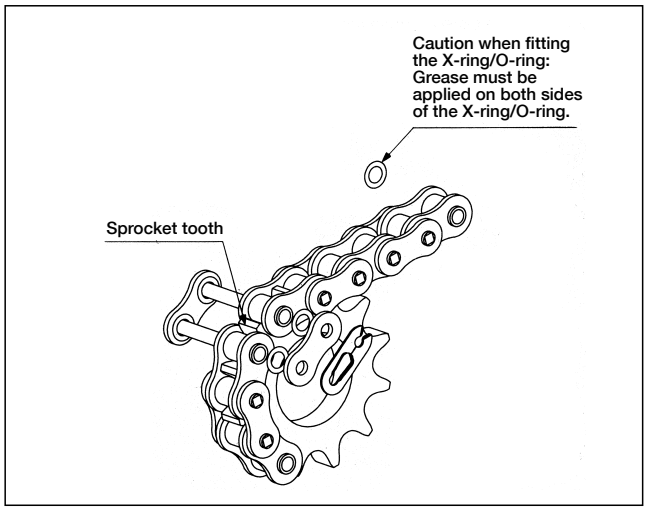

3. Connecting procedure
   ①Confirm that X-ring/O-ring are attached to the roots of the pins.
   ②If the amount of grease applied on the connecting pins is small, coat the pins with grease at the central portions.
   ③Insert the connecting pins into the bushings of the inner links at both ends.
   ④Confirm that the grease is applied to the entire face of the X-ring/O-ring, and fit the X-ring/O-ring onto the connecting pins.
   ⑤Insert the connecting pins into the connecting plate and while pressing the connecting plate, install the spring clip. Confirm whether the head (the end without a split) of the spring clip is turned in the feeding direction of the chain. (See the following illustration.)
   ⑥Be sure to confirm that the spring clip is securely fitted in the clip grooves of the connecting pins.

This completes jointing of the connecting link. Note that grease on the surfaces of connecting pins and X-ring/O-ring can be removed during installation work. In this case, re-grease using the grease on the surface of the base chain or the grease in the polyethylene bag in which the connecting link was contained.

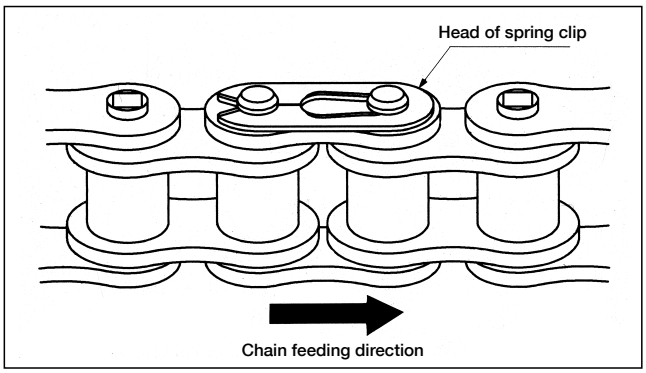

Maintenance

Check

a. Confirm the following before operation

Connected joint	● Confirm that the connection is sufficient and that components have no problem. ● Confirm that bending is smooth (in the case of O-ring chain, bending is slightly stiff).
Chain sprocket attachment	● Confirm that there is no serious flaw, rust or wear. ● Confirm that sag is proper. ● Confirm that no pin rotates. ● Confirm that rollers rotate smoothly. ● Confirm that the chain engages with the teeth of sprockets.
Interference	● Confirm that there is nothing interfering with the chain, or that nothing is likely to interfere with the chain or safety cover.
Lubrication	● Confirm that the amount of lubrication is appropriate. (For the amount of lubrication, see the table of lubrication types.)
Driving and driven shafts	● Confirm that the axial measurement and parallel measurement are proper. ● Confirm that the difference of sprocket planes is within the allowance.
Peripheral equipment	● Confirm that peripheral equipment is installed correctly.

b. After confirmation and adjustment of the above a, install the safety cover, and switch on the power to start operation.

● It is possible for the chain to be thrown should it break. Do not stay in the direction of rotation during operation.

⚠ Caution

Obstacles	● Obstacles may cause breaking or fracturing which can scatter materials and injure people nearby. Be sure to remove all obstacles.
Abnormal noise	● Abnormal noise during operation is a sign of trouble. Immediately switch off the power, and determine the cause.
Flaws and rust	● If any serious flaws or rust is visible, it may cause the chain to break and fracture and possibly injure people nearby. Confirm that the chain has no serious flaws or rust.
Sprocket	● If a sprocket is worn, the sprocket may break, or the chain may ride over the sprocket, breaking it and possibly resulting in injury to people nearby. Confirm that the sprockets are not worn.
Devices that prevent accidents	● Install accident prevention devices. To avoid human injury caused by scattered materials, install safety devices (safety cover, safety net, etc.). ● Install an emergency stop device. To avoid human injury due to unexpected overload, install an emergency shutdown device such as a load controller or a brake.

Before trial operation

Confirm the following on chain installation before starting operation.

- The chain correctly engages with the sprockets.
- The joints are normal. (The spring clips are correctly installed and cotters are not bent.)
- The chain sag is proper.
- The chain is not in contact with the chain case.
- The lubrication is proper.

Check items during trial operation

If the chain can be manually rotated, rotate it to confirm that there is no abnormality before starting trial operation. Be alert to the following during trial operation.

- Whether there is abnormal noise.
  If the chain contacts the chain case or if the chain heavily vibrates, abnormal noise occurs. Check the installation of chain case and chain sag.
- Whether lubrication is normal during operation.
  Re-check the condition of lubrication.

Elongation limit of chain
Limit of Chain Sag

● **Events caused by sag failure**

Even if the sag of the chain is normal before the start of operation, it can increase if the chain is elongated due to wear of pins, bushings, etc. If the sag is excessive, the following will occur.

a. Abnormal vibration
b. Chain rollers ride over the heads of sprocket teeth.
c. The chain is seized by a sprocket.
d. The chain contacts the chain case.

These conditions can often cause abnormal noise. Should any abnormal noise occur, immediately stop operation, and check carefully to determine the cause. Such conditions often cause damage not only to the chains, but to the entire equipment. A preliminary check is necessary.

● **Elongation limit of chain**

Even if sag adjustment is normal, excessive elongation of the chain can cause abnormalities similar to those caused by sag failure that inhibit smooth transmission. In such cases, replace the chain. A guide for replacement based on chain elongation limit is listed below. Even if only one link reaches the elongation limit, replace the entire chain with a new one. Unless lubrication is normal, the chain will elongate quickly, causing the aforementioned troubles. Read the contents of "Lubrication" in the next section carefully for performing proper maintenance.

Elongation limits of chain

Number of teeth of large sprocket	Regular chain	O-ring chain and Sintered bushing roller chain
40 or less	2.0%	1.0%
41～60	1.5	1.0
61～80	1.2	1.0
81～100	1.0	1.0
101 or more	0.8	0.8

※If elongation of an O-ring chain or Sintered bushing roller chain exceeds the value in the above table, the wear rate of the chain becomes equivalent to a standard chain, and chain wear rapidly increases from that point.
※The above elongation limits are applicable when the chain can be taken up or when a sag adjusting device is installed. If the shafts are fixed without any sag adjusting device, the recommended elongation limit is 0.5 to 0.7%.

● **Elongation measuring method**

1. To eliminate rattling other than a slight amount of play in the chain as a whole, tighten the chain lightly and measure the elongation.

Note: For an accurate measurement, measure the elongation of the chain applying a measuring load (specified by ANSI) to the chain.

2. As illustrated below, measure the inner length (L_1) and the outer length (L_2) and obtain the measured length (L).

$$L = \frac{L_1 + L_2}{2}$$

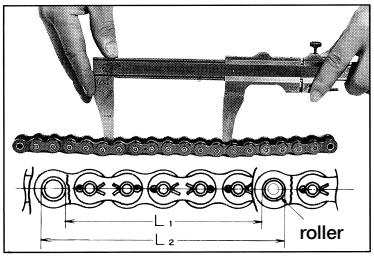

3. Then, obtain chain elongation.

$$\text{Chain elongation} = \frac{\text{Measured length} - \text{Reference length}}{\text{Reference length}} \times 100(\%)$$

Reference length = Chain pitch × Number of links

4. In order to reduce the measuring gap, measure the length of about six to ten links.

Chain wear-elongation check gage

We recommend and can supply a chain wear-elongation check gage (P.115) for facilitated finding of elongation limit.

Sag adjustment of roller chain

To use a roller chain for a longer period of time, proper sag is an important component. If the roller chain is over-tensioned, the oil film between pins and bushings is lost, shortening chain life and damaging the bearings. If the chain sags overly, the chain will vibrate or be seized by the sprocket. In about 50 hours (it differs depending on the service conditions) after starting the roller chain use, the chain will be elongated by about 0.1 percent of the entire length due to the conformability of respective contacts. So, adjust the sag at this time. Thereafter, if proper lubrication is maintained, the elongation will be negligible. Check and adjust the sag at proper intervals.

Optimum sag

In general, keep sag S at about 2 % of span L, but in the case described below, keep it at about 1 %.

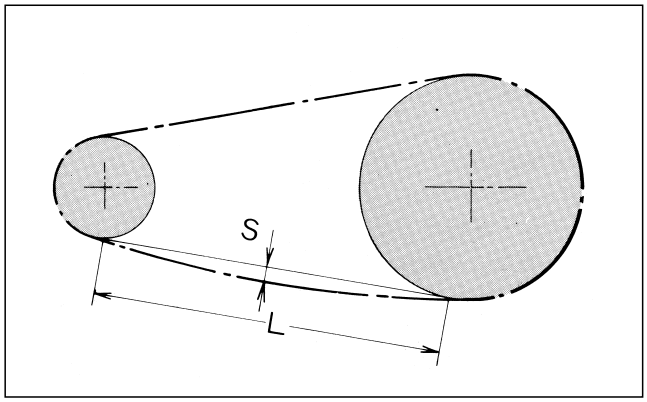

Keep sag at 0.01L or less in the following cases:

- ○ When the chain is installed vertically or almost vertically.
- ○ When the chain is installed horizontally or almost horizontally with the top slackened.
- ○ When the center distance between sprockets exceeds 50 times the chain pitch.
- ○ When vibration or shock occurs.
- ○ When the chain is frequently started and stopped.
- ○ When the chain is suddenly reversed.
- ○ When the speed ratio is 7:1 or more (keeping the speed ratio at 7:1 or less is safer and preferable).)

How to adjust sag

Adjust sag in the following ways.

1. Adjustment of the center distance

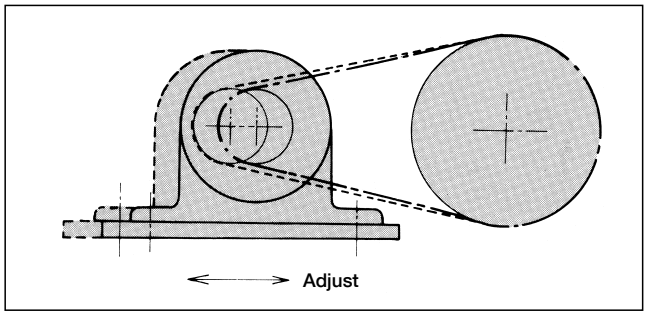

2. Adjustment using a tensioner or idler

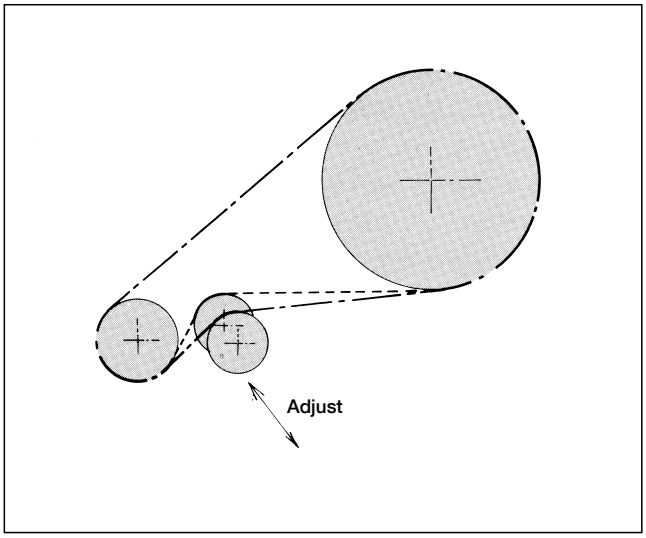

3. Increase or decrease of pitch number by offset link

By using an offset link, the total length of a chain can be increased or decreased by one pitch. However, since offset link performance is generally poor, an even number of links, if possible, is recommended.

Other checks

● Checking sprocket

If a sprocket is not installed at the correct position of the shaft or is not parallel to the shaft, the plates of the chain may be flawed, or the chain may be twisted. This can be judged by examining the contact faces of the sprocket teeth. In this illustration, a uniform contact as indicated by A is normal. If the contact is different on both sides as indicated by B, correction is necessary.

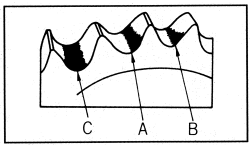

● Checking idler or tensioner

When sag is adjusted, check also whether the idler or tensioner itself is damaged. If the contact between an idler or tensioner and a chain is at the center of the tooth gap bottom as indicated by C, it is normal. If the contact is as indicated by A or B, the bearing of the idler or tensioner may be abnormal.

● Checking chain attachments

In the case of a chain with attachments, it can result in accidents if a mounted part is loosely installed or comes off. Furthermore, if an installation hole is enlarged due to wear, the chain life may be shortened.

For troubles during operation, see "Trouble Shooting".

Lubrication

Necessity of lubrication

In a roller chain transmission, even if the chain and sprockets are designed to suit the service conditions, poor lubrication inhibits maintaining performance and life to design specifications. In the case of a roller chain, the wear loss caused under proper lubrication is dramatically different from that caused without it. Troubles caused due to insufficient lubrication include the wear of pins and bushings, rough engagement with the sprockets, increased noise, and breakage as a result of prolonged undesirable conditions. Proper lubrication is very important. Requirements of lubrication and the effects of proper lubrication are listed below.

Requirements of lubrication	Effects of proper lubrication
● Selection of lubricant ● Lubricating points ● Lubrication type (lubricating method, lubrication intervals, amount of lubrication)	● The wear of frictional portions is decreased. ● Power loss is decreased. ● Seizure is prevented. ● Frictional heat is decreased. ● Generated heat is eliminated. ● Ensure smooth operation and extends machine life.

Selection of lubricant

Select the lubricant of a roller chain in reference to the lubrication type (P.135), ambient temperature and chain No., according to the following table.
Lubricant should be a mineral oil of good quality. It is important that the lubricant contains no dust or foreign substance. Never use waste oil. If the ambient temperature is extremely low (-10°C or lower) or high (+60°C or higher), a specific oil is necessary. In this case, please consult our engineering department.

Lubricating points

If the chain is immersed in an oil bath, oil penetrates every part of the chain. In the case of manual lubrication, brush lubrication or drip lubrication, ensure that the oil sufficiently penetrates the portions of ① and ② in the following illustration.

Lubricating points

①Between outer links and inner links (for prevention of elongation)
②Between bushings and inner plates (for noise reduction and protection against wear and impact damage on bushings and rollers.)

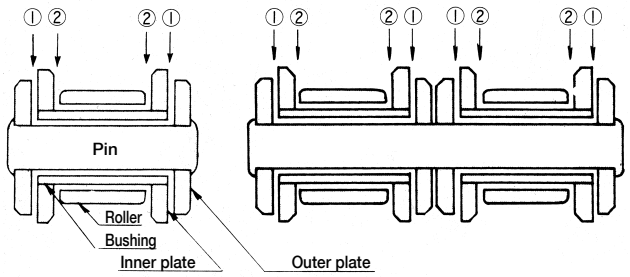

Simplex roller chain　　Duplex roller chain

Lubricate on the sag side of the chain, i.e., at the position indicated in the following illustration. Since the lubricant is also useful for rust prevention, coating the entire surface of the chain with the oil is recommended.

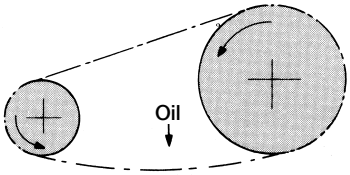

Type of lubrication	A, B				C			
Chain No. \ Atmospheric temperature	−10℃～0 ℃	0 ℃～40℃	40℃～50℃	50℃～60℃	−10℃～0 ℃	0 ℃～40℃	40℃～50℃	50℃～60℃
DID 25～DID 50	32	68	100	150	32	68	100	150
DID 60～DID 80	68	100	150	220				
DID 100					68	100	150	220
DID 120～DID 240	100	150	220					

Values in the table show viscosity of ISO-VG Grades.
Special kind of lubricant must be applied when ambient temperature is -10°C or lower or 60°C or higher. Please consult us for appropriate selection of lubricant.

Lubrication types (Explanation of A, B and C in the tables of Drive performance (kW ratings)

The allowable kilowatt ratings of chains shown in table of the drive performance (kW ratings) is based on the condition that any of the following lubrication is adopted. If any of the following lubrication cannot be adopted or in circumstances where earth, sand or dust exists, see the DID Ultimate Life Chain Series (P.64).

Lubrication type	Name and method	Lubrication intervals and amount	Caution
A Use DID chain lube (see P.114).	Lubricator Brush 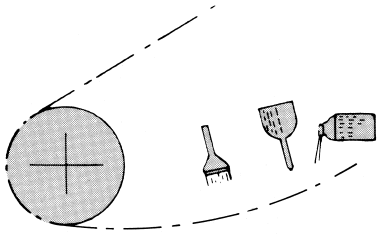	Carry out periodical using a lubricator or brush at least once a day.	While rotating the chain slowly, lubricate the entire length uniformly three to four times. Take care not to allow your hand or clothes to be caught by the chain during lubrication. Note that extra oil will be scattered when the operation is started.
	Drip lubrication 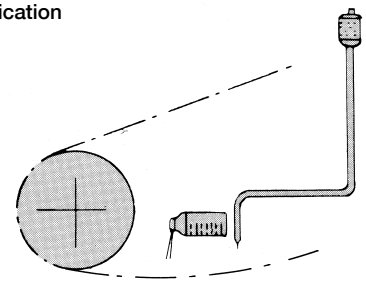	Supply about 5 to 20 drops of oil per minute.	In this case, since extra oil is scattered, installing a simple casing is recommended.
B	Oil bath lubrication 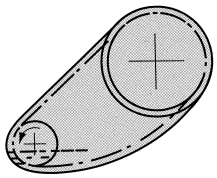	Keep the chain immersed in oil, about 10 mm below the oil surface. If immersion is too deep, the oil will become abnormally hot.	The container should be leak proof. Before using the container for the first time, thoroughly wash the inside to remove dust and other foreign substance.
	Disk lubrication 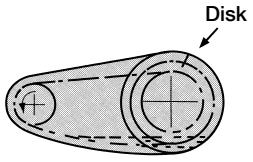	A disk is used to apply oil to the chain. Keep the disk immersed in oil, at a depth of about 20 mm. Keep the peripheral speed higher than 200 m/ min.	
C	Forced feed lubrication 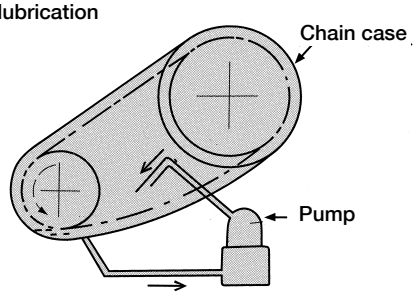	The amount of lubrication must be set to avoid abnormal heating. In general, the oil amount should be set at a level not to allow the chain high temperature over 60°C.	The oil container should be leak proof. When using the container for the first time, thoroughly wash the inside to remove all dust and foreign substance.

General cautions for lubrication

Unless proper lubrication is carried out, chain fatigue will result earlier, causing various problems. Careful inspection is necessary.

In the case of insufficient lubrication

If the lubricant is exhausted, red rust is generated between the inner and outer plates, causing wear drastically. When a chain is disassembled after going under such condition, red rust is visible on the surfaces of pins, and the surfaces are roughened, as shown in this photo. (Normally, pins have a mirror surface.) The lubricant must be applied before this happens.



Do not use grease for lubrication !!

Do not use grease to lubricate your chains, since grease takes too long to reach the inside through pins and bushings at ambient temperature. Use the machine oil shown in the table on P.134 or DID Chain Lube/DID HI-PWR Lube (a spray lubricant).

Before lubrication, remove foreign substances and dirt from the chain as thoroughly as possible. If water is used for washing the chain, quickly dry it to prevent rusting, and then lubricate.

In the case of drip lubrication, oil bath lubrication or forced feed lubrication

Check the following:
1. The lubricant is not dirty.
2. The amount of lubricant is correct.
3. Lubricant is uniformly applied to the chain.

Cautions

Dust contamination must be avoided to maintain wear resistance. If temperature rises abnormally or the chain squeaks, the oil may be exhausted. Check to verify the condition.

Troubleshooting Guide

Trouble	Possible cause	Correction
A pin, bushing or roller is fractured. Note: See "Fracture patterns of respective chain components" on P.136.	High speed revolution exceeding the tolerance of chain and sprockets	Decelerate the speed, or select a chain with a smaller pitch. Otherwise, select a sprocket with a larger number of teeth. Refer to the details of "Selection by Drive Performance (kilowatt ratings)" (P.122).
	Sudden large shock load	Avoid shock load as much as possible. Install a damper, etc., to damp the shock load.
	Improper lubrication	Periodically supply the correct lubricant. Spray type chain oil "DID Chain Lube" is recommended.
	Corrosion of chain	Check the service circumstances and lubrication condition, and select a proper chain.
	Wear of sprocket	Replace it with a new one. Use a sprocket conforming to the correct standard dimensions.
	Seized foreign substances	Immediately remove the foreign substances, and strictly control the service circumstances.
Abnormal noise	Chain is excessively tensioned or sagged.	Pay constant attention to the chain sag. Correct by adjusting it according to the procedure stated in "Sag adjustment of roller chain" (P.133).
	Incorrect alignment of sprockets	Check the alignment between both the large and small sprockets.
	Large wear elongation of chain or wear of sprocket	Replace chains that are elongated beyond the tolerance and worn sprockets with new ones.
	Incorrect installation of chain case	If the chain contacts the chain case, immediately correct and adjust.
	Improper lubrication	Lubricate properly and periodically. (See "Lubrication types" (P.135).
	Improper combination of chain and sprockets	When replacing the chain, use the correct chain size and sprocket sizes. Select a chain suitable for sprocket sizes, and sprockets suitable for the chain size. (Especially be alert when replacing HK Series multiplex chain.)

Trouble	Possible cause	Correction
When a chain rides over a sprocket	Excessive wear elongation of chain	Replace the excessively worn chain with a new one.
	Chain too slack	A chain with too much slack causes the chain to ride over a sprocket, and can damage the tooth heads of a sprocket. Correctly adjust it.
	Worn sprocket or deposition of foreign substances on tooth gap bottom	Replace the worn sprocket with a new one. If foreign substances are deposited on the bottoms of the teeth, immediately remove them.
Wear of plates and sprockets on their lateral sides	Incorrect alignment of sprockets	Misalignment of large and small sprockets result in abnormal wear of the sides of link plates and the sprockets, thereby shortening chain life. Apply a straight edge to the lateral sides of sprockets to check alignment.
Vibration of chain (whipping)	Chain too slack	Adjust to a proper sag. Consider the installation of spring type idler or tensioner.
	Uneven wear elongation	Imperfect and uneven lubrication causes uneven wear and pitch irregularity. Immediately replace the chain, and lubricate the entire chain evenly.
	Stiff link	See the following column.
Stiff link	Load in excess of tolerance	Select a DID chain with a larger allowable tension.
	Misalignment of sprockets	If the alignment between sprockets is incorrect, the force applied from the sides of the sprockets opens the inner plates, which interferes with the outer plates and cause stiff links. Align the large and small sprockets properly.
	Corrosion of chain Improper lubrication	If a chain is left without lubrication for a long time or in a corrosive atmosphere, rust is generated and smooth motion is inhibited. A corroded chain must be replaced. Be sure to lubricate periodically.
	Interference between plates and foreign substances	If a chain comes in contact with foreign substances during feeding, the inner and outer plates may be opened. Immediately remove the foreign substance.
	Ingress of foreign substances into bending sections of chain.	If sand or mud enters bending sections, remove the chain, and wash and lubricate, or replace the chain. Furthermore, install a case, etc. to prevent the ingress of sand and mud.
Fractured chain Note: See "Fracture patterns of respective chain components" on P.138.	Fatigue fracture	If a chain is used for a long time at a load exceeding the maximum allowable tension, fatigue fracture of plates and bending fatigue fracture of pins occur. If the chain life before fatigue fracture is shorter than the expected life, select a chain with a larger maximum allowable tension. For example, if a DID50 Standard Roller Chain is used for 750 cc motor-cycles, it may be fractured in a short time. In this case, rather than the chain being faulty, the selection was incorrect.
	Ductile fracture of plates Fracture of pins by shear or bending	If a load or impact extremely larger than the allowable tension acts on a chain, ductile fracture of plates or fracture of pins by shear or bending occurs. This fracture occurs when the chain size selected is incorrect and allowable tension is too small. Re-select a proper chain.
	When the chain rides over a sprocket	The fracture caused when the chain rides over a sprocket is mainly caused by wear elongation. Select an appropriate chain, and lubricate properly.
	Hydrogen embrittlement	Remember that a chain might be broken suddenly by hydrogen embrittlement if it comes in contact with acids.
	Interference of foreign substances	If foreign substances interfere with or are seized by the chain during feeding, excessive load acts on the chain, and its life will be shortened or it may break suddenly. Make necessary arrangements for an appropriate service circumstances, and be sure to immediately remove any foreign substances.
Rotation of pin (see P.138)	Excessive tension Riding of chain over sprocket Corrosion of chain and improper lubrication	If excessive tension is the cause, select a chain larger in allowable tension. See the column "When the chain rides over a sprocket". See the third frame of "Stiff link".

Fracture patterns of respective chain components

To be aware aforetime of how and which part of the chain is damaged under improper use greatly helps to clarify the cause and determine corrective measures in such an event.

● Fracture of plate

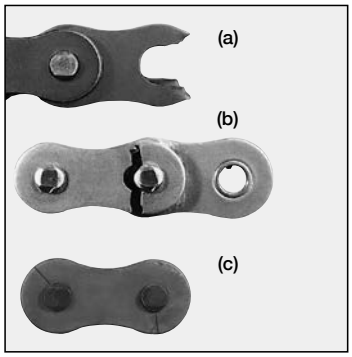

When a large tension acts to fracture a plate, as shown in (a), the cut ends are oblique and plastic deformation occurs. However, when the load is slightly larger than the maximum allowable tension, fatigue fracture occurs, and any plastic deformation does not occur as shown in (b). A significant feature of fatigue fracture is that a crack occurs in the direction almost perpendicular to the pitch line (center line between both pins). In the case of hydrogen embrittlement by an acid, the crack mostly occurs in the direction as shown in (c), and the cut ends are flat, while the area around the cut ends may be decolored due to erosion by the acid.

● Fracture of pins

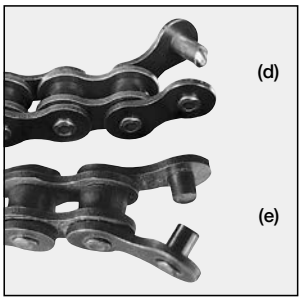

When a pin is fractured by excessive tension, the fracture occurs close to the plate, with a bulged specular surface formed by shearing, as shown in (d). However, when the acting force is not so strong, fatigue fracture takes place after a long period of time around the center of the pin as shown in (e), and the fractured surface is flat with small undulations.

● Fracture of bushings

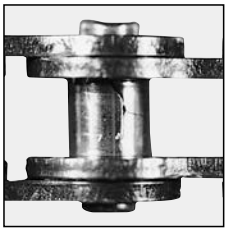

As with rollers, bushings fracture by shock. Generally, as shown in the photo, a vertical crack occurs and stops near the plates. One crack can also be superimposed on another, causing the central portion to come off. In general, it can be said that a larger crack is caused by a larger tension.

● Fracture of rollers

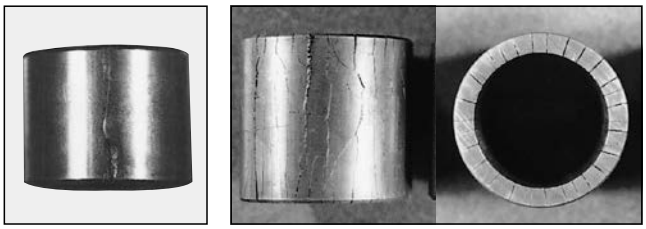

When a roller fractures during operation, typically vertical splitting occurs as shown in the photo, and in general, pitch marks of fatigue extend from the inside of the roller and cause splitting. If splitting occurs all at once due to a large tension, the cause can be identified easily since the split faces are not polished. If tension is excessive, the rollers are forcefully pressed against the tooth faces of sprockets, and a roller end may be cracked and deformed.

● Rotation of pins

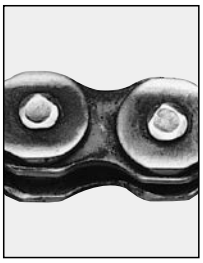

As shown in the photo, the rotation of a pin can be identified by the deviance of the rivet mark on the pin head from the correct position. If the chain is disassembled, galling is found between pins and bushings in most cases. The cause of galling is improper lubrication or excessive tension. When a machine has been out of use for a long period of time, rust may develop between pins and bushings, causing the pin to rotate.

Elongation of chain

In general, the elongation of chains includes the following three types;

1. Elastic elongation by chain tension

If a load acts on a chain, the respective components of the chain are elastically deformed, causing elongation. If the load is removed, the original length is restored.

2. Plastic elongation by chain tension

If a load in excess of the elastic limit acts on a chain, plastic elongation occurs. In this case, even if the load is removed, the original length cannot be restored. Plastic elongation of chain may diminish its performance. Replace it without delay.

3. Wear elongation of chain

Chains are subject to wear since pins and bushings are worn by mutual contact. After use for a long time, the wear appears as an increase of chain length. This is wear elongation. Wear elongation is an important factor for deciding the timing of chain replacement. See P.139.

Timing for Replacement

If the engagement between chain and sprockets becomes defective or any factor that causes excessive decline in the strength of the chain occurs, replace the entire chain. When any of the following conditions occur in the chain you use, replace the entire chain to maintain safety.

- When a chain is worn close to the "Elongation limit of chain" on P.132.
- When a flaw or crack occurs in a plate.
- When a flaw or crack or defective rotation of a roller is observed.
- When a chain link is stiff.
- When a pin has been rotated.
- When a pin is bent or otherwise deformed or when a plate is seriously warped.
- When rust buildup prevents smooth bending of the chain.
- When diluted sulfuric acid or any other corrosive material is deposited.

※ If you cannot judge whether a flaw is "harmful", please consult us.

Replacement of sprockets and how to order

The life of sprockets is generally several times the life of a chain, but if the teeth are worn because of insufficient lubrication or damaged because of a shock load, etc., the sprockets must be replaced.

○ When placing an order, please specify the following if the chain No. is known.

1. Chain No. and number of strands
2. Type of sprockets
3. Shaft hole diameter (d) (This is not necessary if you drill this hole; in this case, drill a hole not exceeding the maximum shaft hole diameter.)
4. Number of teeth
5. Hub diameter (DH) and length (L) (in the case of non-standard sprockets)
6. Whether the tooth heads are hardened

○ Specify the following items, if the chain No. is unknown

1. Tooth thickness (T)
2. Root diameter (DB) (Caliper diameter (DC) in the case of odd-number teeth)

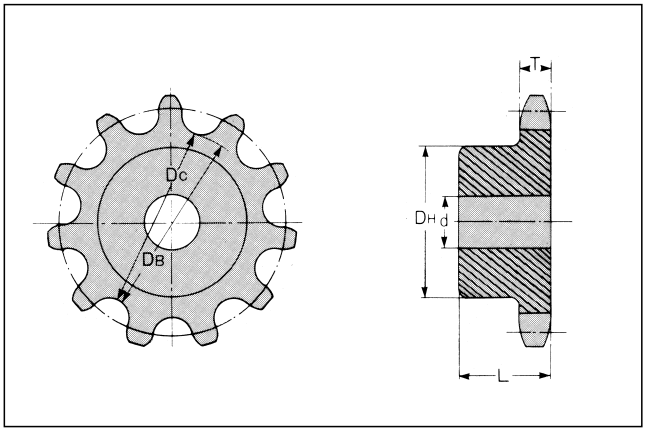

2 Small Conveyor Chains

- General
- Single Pitch
- Double Pitch
- Others
- Technical Information







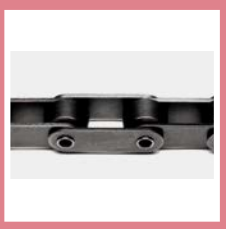



Variation of Chain Bodies

The main components of DID Small Conveyor Chain consists of two basic types single pitch chains and double pitch chains.
Single pitch chains correspond to "General application chains" in the previous chapter of "Roller Chains for Power Transmission", and are used with ANSI standard sprockets". Double pitch chains are standardized as ANSI Double Pitch Chains, and the design of pins, bushings and rollers are basically the same as that of single pitch chains. The plates only are made longer to double the pitch of single pitch chains. The sprockets of double pitch roller are also standardized as ANSI double pitch chain sprockets. Small Conveyor Chain is mainly composed of the above base chains, and is attached with various top rollers, side rollers or attachments that customize chains for different applications. Classifications of DID Small Chains for Conveyor Systems are shown on P143.

Ultimate Life Chain Series and Environment Resistant Chain Series

Ultimate Life Chain Series and Environment Resistant Chain Series described in the previous chapter are also available for Small Conveyor Chains, which are listed on P144-145 for reference.

How to Order Small Conveyor Chains

- **To order DID C2050 with 96 links, with bent attachments (one-hole) on both sides every two links, with a connecting link attached (in straight shape).**

[Example]

DID C2050 2P K 1 × 96 R T

Chain No.

Attachment intervals

Number of holes on attachment

Indicates that the overall length of chain is 96 links.

Type of connecting link
R: Clip type (DID60 or DIDC2060H or smaller)
C: Cotter type (DID80 or DIDC2080H or larger)

Types of attachments
K: Bent attachments are installed on both sides
A: Bent attachments are installed on one side
SK: Straight attachments are installed on both sides
SA: Straight attachments are installed on one side

Conditions of connecting link
B : 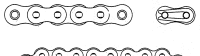 ···Connecting link packed separately
E : 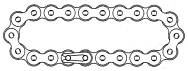 ···Looped chain with connecting link
T :  ···Connecting link attached to one end
J :  ···Connecting link only

※For connections other than those above, see P.147. For any other style, please consult us.
※In case of top roller chains or side roller chains, see the corresponding pages.

Classification

Major division		Medium division	Minor division	Page
Standard Conveyor Chain with Attachments		Single pitch	Standard	P146～P165
			Ultimate Life	
			Environment Resistance	
		Double pitch	Standard	P166～P189
			Ultimate Life	
			Environment Resistance	
Free Flow Chain	Top Roller Chain	Single pitch	Standard	P190～P197
			Ultimate Life	
			Environment Resistance	
		Double pitch	Standard	
			Ultimate Life	
			Environment Resistance	
	Side Roller Chain	Single pitch	Standard	P198～P201
			Ultimate Life	
			Environment Resistance	
		Double pitch	Standard	
			Ultimate Life	
			Environment Resistance	
Others	Hollow Pin Chain	Single pitch	Standard	P202
			Ultimate Life	
			Environment Resistance	
		Double pitch	Standard	
			Ultimate Life	
			Environment Resistance	
	Flexible Chain	Single pitch	Standard	P203
			Ultimate Life	
			Environment Resistance	
	Frat Plate type Roller Chain	Double pitch	Standard	P204
			Ultimate Life	
			Environment Resistance	

Standard Conveyor Chain with Attachments Series (Single Pitch)

	Standard Roller Chain	Ultimate Life Chain Series			
		X-Ring Chain (LX) O-Ring Chain (LD)	Fit X-Ring Chain (LF)	Sintered Bushing (UR), (URN)	Nickel Plate (N)
Name					
Features		①DID X-Ring chain is the best value of maintenance-free chain available. ②The patented X-Ring design has half the friction of normal O-Ring chain and provides great sealing performance. It keeps the dirt out and the grease in much better than any other O-rings. ③Up to 2 times longer wear resistance performance compared to normal O-Ring chains. ④Great cost savings can be achieved through longer life and less down time.	①Strength is equivalent to existing X-Ring Chain/LX. ②Attachment can be designed using the same dimensions as JIS/ANSI standard. ③Standard JIS/ANSI sprockets can be used for even multiplex.	①Using sintered alloy for bushings ②Long life chain for low-speed and light load operation ③Wear life is improved by 5 times of standard chains	①Specialized nickel coating ②Suitable for circumstances requiring a clean impression and neat appearance ③Withstands salt breeze and acidic conditions
Functions	Tensile strength index 100% Temperature Range in Use -10℃~80℃	Dirty Environment, Dusty, Maintenance-Free, Tensile strength index 100% Temperature Range in Use -10℃~120℃ ※ ※LX: Temp. -10°C~120°C, LD: Temp. -10°C~80°C	Dirty Environment, Dusty, Maintenance-Free, Tensile strength index 100% Temperature Range in Use -10℃~80℃	Maintenance-Free, Tensile strength index 70%, Temperature Range in Use -10℃~60℃	Corrosive Atmosphere, Moisture, Salt Water, Alkaline Environment Allowable Load 100%, Temperature Range in Use -10℃~80℃
Main uses		FOOD, PACK, TEXTILE, PRINT, CONVEYOR, CANNING, CONST-RUCTION, HOME APPLIANCE, AGRICULTURE	FOOD, PACK, TEXTILE, PRINT, CONVEYOR, CANNING, CONST-RUCTION, HOME APPLIANCE, AGRICULTURE	FOOD, PACK, TEXTILE, PRINT, CONVEYOR, HOME APPLIANCE	TEXTILE, CONVEYOR, FOOD, CHEMICALS, PRINT, PARKING

■ Standard Conveyor Chain with attachments (Single pitch): Chain No. and Codes

Chain No.	Standard	O-Ring/X-Ring	Sintered Bushing	Nickel Plating	Hi-Guard	Double Guard
DID 25	○	-	-	N	-	-
DID 35	○	LD	-	N	E	-
DID 41	○	-	-	N	-	-
DID 40	○	LX/LF	C**UR,URN	N	E	WG
DID 50	○	LX/LF	C**UR,URN	N	E	WG
DID 60	○	LX/LF	C**UR,URN	N	E	WG
DID 80	○	LD	C**UR,URN	N	E	WG
DID 100	○	LD	-	N	E	-
DID 120	○	LD	-	N	E	-
DID 140	○	LD	-	N	-	-
DID 160	○	LD	-	N	-	-
DID 180	○	LD	-	-	-	-
DID 200	○	LD	-	-	-	-

Note: 1. Standard chains are available for those indicated with ○.
2. Although the ones marked with - aren't standard products, consult us.

Environment Resistance Chain Series

	Hi-Guard (E)	Double Guard (WG)	Stainless Steel Chain (SS)	Stainless Steel Chain (SSK)	Stainless Steel X-Ring Chain (SSLT)	Low Temperature Resistant Chain (TK)
Name		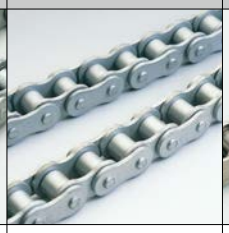				
Features	①High corrosion resistance coating ②Suitable for circumstances both indoors and outdoors where long-term resistance to rusting is required ③Excellent resistance to corrosion, salt and rusting	①Approx. twice more corrosion resistant compared to High Guard Chain ②Applicable in mildly acidic or mildly alkaline conditions ③Downsizing is possible compared to Stainless Steel Chain	①18-8 stainless steel ②Suitable for circumstances exposed to chemical agents, water or high temperature ③Best corrosion resistance and heat resistance	①Suitable for places exposed to chemical agents, water and high temperature ②1.5 times more allowable tension compared to SS type	①Superb wear resistance ②Outstanding cost performance ③Significant reduction in friction-loss	①Using material suitable for low temperature and specialized grease ②Suitable for circumstances where temperatures drop down to -40 °C. ③Excellent low temperature strength
Functions	Corrosive Atmosphere, Moisture, Salt Water, Allowable Load 100%, Temperature Range in Use -10°C~80°C	Corrosive Atmosphere, Moisture, Salt Water, Alkaline Environment, Acidic Environment, Allowable Load 100%, Temperature Range in Use -10°C~80°C	Corrosive Atmosphere, Moisture, Salt Water, Alkaline Environment, Acidic Environment, Clean Areas, Temperature Range in Use -10°C~400°C; Allowable Load 10%	Allowable Load 15%	Corrosive Atmosphere, Moisture, Salt Water, Alkaline Environment, Acidic Environment, Dirty Environment, Dusty, Maintenance-Free, Great Savings, Temperature Range in Use -10°C~200°C, Allowable Load 10%, Clean Areas	Corrosive Atmosphere, Alkaline Environment, Temperature Range in Use -40°C~80°C, Allowable Load 100%
Main uses	TEXTILE, CONVEYOR, PARKING, WATER TREATMENT, OUTDOOR, CONST-RUCTION	TEXTILE, CONVEYOR, PARKING, WATER TREATMENT, OUTDOOR, CONST-RUCTION, FOOD, CHEMICALS	CONVEYOR, FOOD, CHEMICALS, WATER TREATMENT		CONVEYOR, FOOD, CHEMICALS, WATER TREATMENT	PACK, CONVEYOR, FOOD, CONST-RUCTION

	Stainless Steel		Stainless Steel X-Ring Chain	Low Temperature
	SS	-	-	-
	SS	-	-	-
	-	-	-	-
	SS	SSK	SSLT	TK
	SS	SSK	SSLT	TK
	SS	SSK	SSLT	TK
	SS	SSK	SSLT	TK
	SS	SSK	-	TK
	SS	SSK	-	TK
	SS	-	-	TK
	SS	-	-	TK
	SS	-	-	-
	SS	-	-	-

Standard Attachments

For "DID Small Conveyor Chains", various links are available for coupling and attaching custom devices directly to the chains. These links are called attachments. The following standard attachments are available.

Types and names of standard attachments

DID standard attachments include five kinds for single pitch chains and five kinds for double pitch chains as illustrated below. Furthermore, for single pitch chains, four kinds of wide attachments, as wide as outer plates, are available. Standard attachments for respective chain sizes are listed on the following page.

Nominal number of attachment

(Example) DID 60 4 P A 1

- DID 60: Chain size
- 4 P: Attachment intervals
- A: Types of attachments
- 1: Number of holes

The above indicates a DID60 chain provided with A Attachment with one hole at every four links.

Attachment

A (Bent attachment on one side)

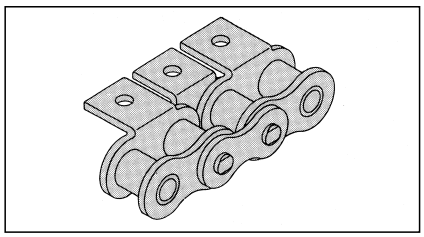

SA (Straight attachment on one side)

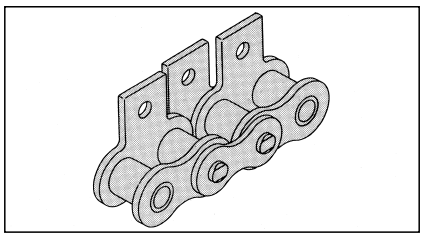

D (Extended pin)

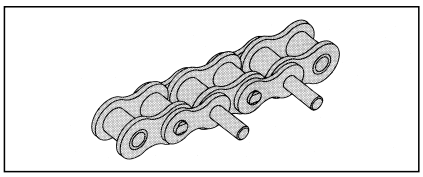

Above figure shows D1 (with an extended pin on every two links)

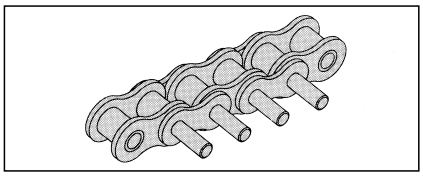

Above figure shows D3 (with an extended pin on every link)

Ref : D pin in longer length is called "LP attachment" (abbreviation of Long Pin)

K (Bent attachments on both sides)

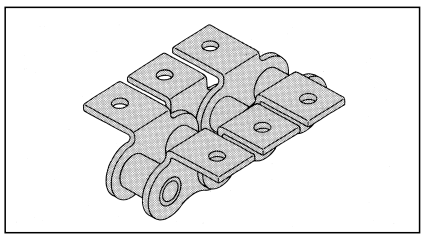

SK (Straight attachments on both sides)

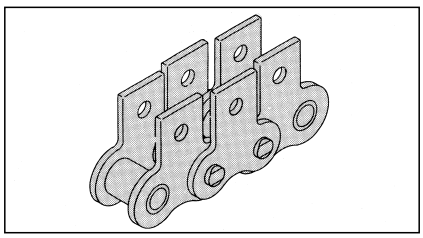

Example of use of standard attachment

Installation of a U groove holder with **SK1**

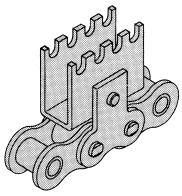

Installation of a dog with **SK1**

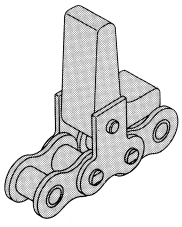

Installation of pins with **K1**

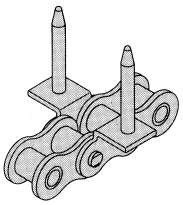

Installation of a bucket with **K1**

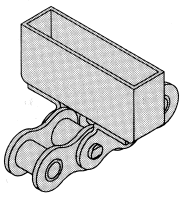

Installation of a bucket with **K1**

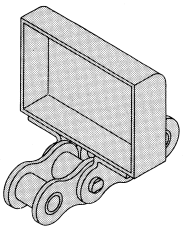

Installation of a slat with **A1**

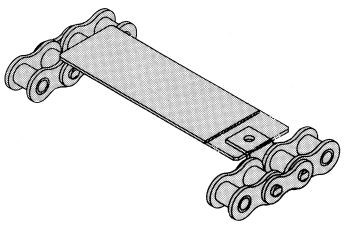

Conveyance of long article by two stands of **SA1**

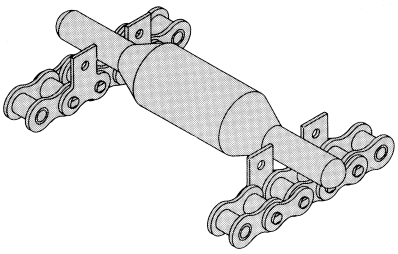

Installation of L metal fitting with **D3**

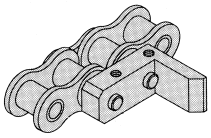

Installation of a dog with **D1**

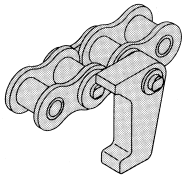

Standard Attachment Chart

○ : In stock
△ : Made-to-order
× : Special

		DID standard attachment																	
		Standard type										Wide type							
		One-side bent		Both-side bent		One-side straight		Both-side straight		Extended pin		One-side bent		Both side bent		One-side straight		Both-side straight	
		A1	A2	K1	K2	SA1	SA2	SK1	SK2	D1	D3	WA1	WA2	WK1	WK2	WSA1	WSA2	WSK1	WSK2
Single pitch	DID 25	△	×	△	×	△	×	△	×	△	△								
	DID 35	△	×	△	×	△	×	△	×	△	△								
	DID 41	△	×	△	×	△	×	△	×	×	×								
	DID 40	○	×	○	×	△	×	△	×	△	△	△	△	△	△	△	△	△	△
	DID 50	○	×	○	×	△	×	△	×	△	△	△	△	△	△	△	△	△	△
	DID 60	○	×	○	×	△	×	△	×	△	△	△	△	△	△	△	△	△	△
	DID 80	○	×	○	×	△	×	△	×	△	△	△	△	△	△	△	△	△	△
	DID 100	○	×	○	×	△	×	△	×	△	△	△	△	△	△	△	△	△	△
	DID 120	○	×	○	×	△	×	△	×	△	△	×	×	×	×	×	×	×	×
	DID 140	△	×	△	×	△	×	△	×	△	△								
	DID 160	△	×	△	×	△	×	△	×	△	△								
	DID 200	△	×	△	×	△	×	△	×	△	△								
	DID 240	△	×	△	×	△	×	△	×	×	×								

How to indicate the specially arranged chains with attachments

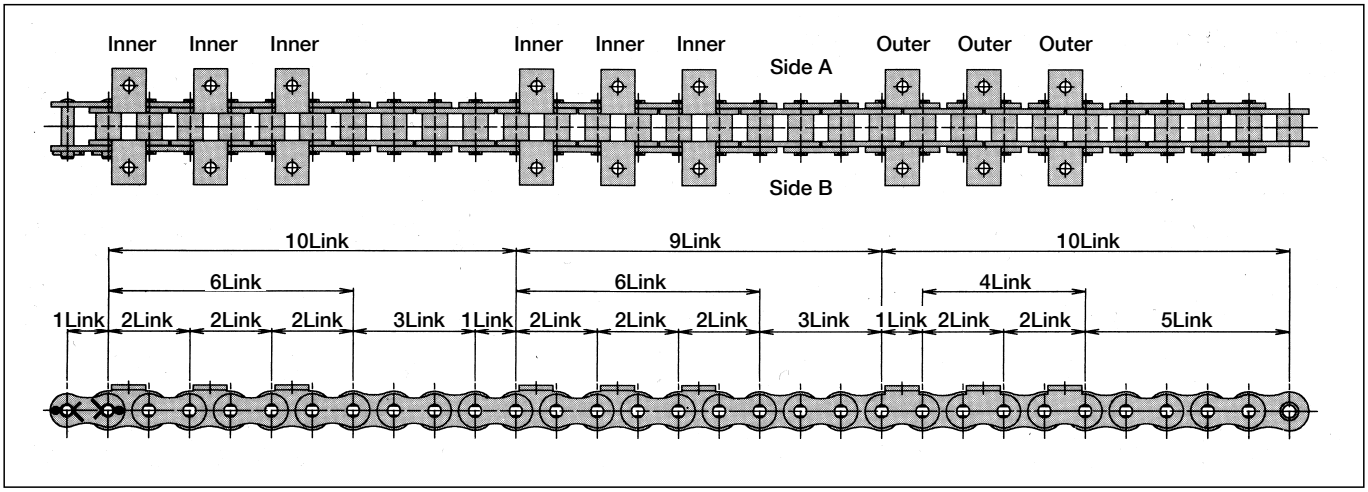

A chain with Attachment K1 specially arranged as above is indicated as follows:

CJ+(K1 inner+PL)×3+3LL+PL+(K1 inner+PL)×3+3LL+K1 outer+(RL+K1 outer)×2+5LL

"CJ" stands for a C connecting link; "K1 inner", an inner link Attachment K1; "PL", an outer link; "3LL", three links from an inner link to an inner link; "K1 outer", an outer link Attachment K1; and "RL", an inner link, respectively. A "+" sign means "connection", and a "×" sign means "repeat". (For one-side attachments such as Attachment A and Attachment SA, the position of attachment plates is on side A in the above illustration.)

Consult us for other arrangements that cannot be indicated as above.
Note: When attaching attachments to every even-number link, they are attached to outer links, unless specified.

Chain

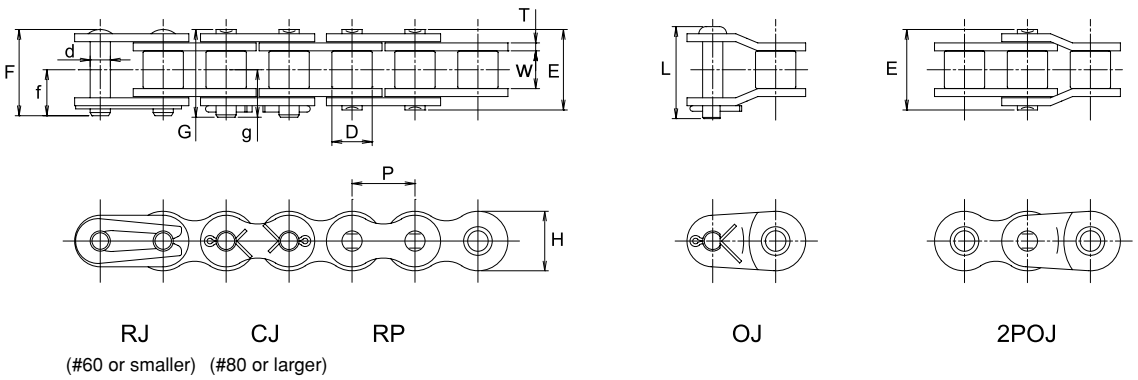

RJ (#60 or smaller) CJ (#80 or larger) RP OJ 2POJ

Attachment

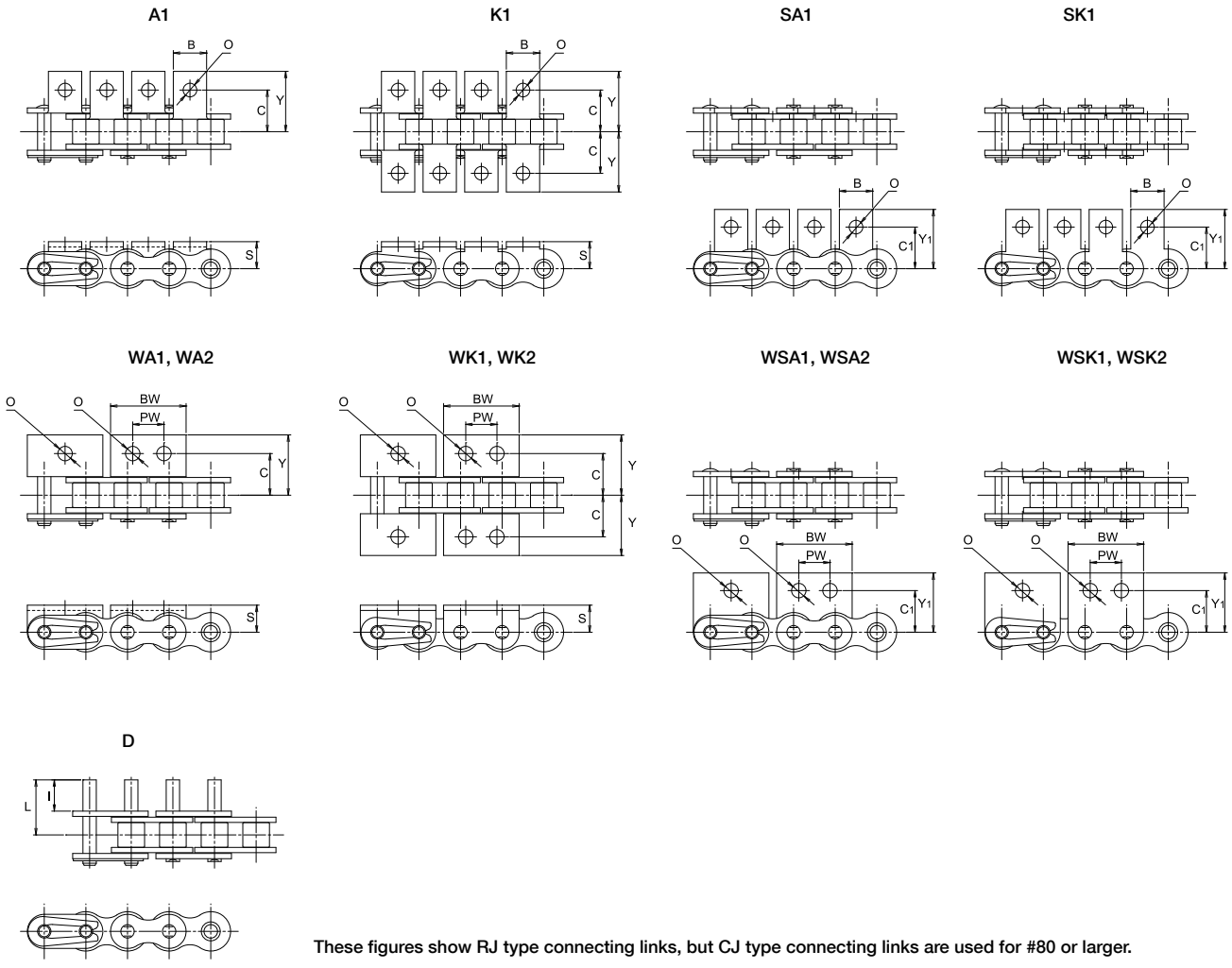

These figures show RJ type connecting links, but CJ type connecting links are used for #80 or larger.

Dimensions of Standard Roller Chain (Single pitch)

● Dimensions of Chain

Unit (mm)

Chain No.	Pitch	Roller link width	Roller (bushing) dia.	Pin							Plate		Avg. tensile strength		Max. allowable load		Approx. weight without attachments
	P	W	D	d	E	F	G	L	f	g	T	H	kN	kgf	kN	kgf	(kg/m)
＊DID 25	6.35	3.18	(3.30)	2.31	7.8	8.5	—	—	4.7	—	0.72	5.9	4.02	410	0.63	65	0.13
＊DID 35	9.525	4.78	(5.08)	3.59	12.0	13.1	—	—	7.3	—	1.25	9.0	9.31	950	1.47	150	0.32
DID 41	12.70	6.38	7.77	3.59	13.7	14.6	—	15.5	7.9	—	1.20	9.6	10.1	1,030	1.67	170	0.39
DID 40	12.70	7.95	7.92	3.97	16.5	17.6	18.1	19.1	9.5	10.1	1.50	12.0	16.6	1,700	2.64	270	0.63
DID 50	15.875	9.53	10.16	5.09	20.3	21.9	22.1	23.2	11.6	12.1	2.00	15.0	27.9	2,850	4.41	450	1.06
DID 60	19.05	12.70	11.91	5.96	25.4	26.9	27.9	29.8	14.3	15.1	2.40	18.1	40.2	4,100	6.37	650	1.44
DID 80	25.40	15.88	15.88	7.94	32.6	—	35.4	37.1	—	19.0	3.20	24.0	78.4	8,000	10.7	1,100	2.55
DID100	31.75	19.05	19.05	9.54	39.5	—	42.5	45.2	—	22.7	4.00	29.9	118	12,100	17.1	1,750	3.79
DID120	38.10	25.40	22.23	11.11	49.7	—	53.0	54.0	—	28.2	4.80	35.9	166	17,000	24.5	2,500	5.49
DID140	44.45	25.40	25.40	12.71	53.6	—	58.4	59.6	—	31.6	5.60	41.9	215	22,000	32.3	3,300	7.11
DID160	50.80	31.75	28.58	14.29	63.6	—	68.2	69.7	—	36.5	6.40	47.8	269	27,500	41.2	4,200	9.82
DID200	63.50	38.10	39.68	19.85	77.9	—	85.0	87.3	—	45.9	8.00	60.0	470	48,000	68.6	7,000	16.50

● Dimensions of attachment

Chain No.	Pitch	A1, K1			SA1, SK1		Common dimensions		D		Approx. additional weight per attachment (kg)		
	P	C	Y	S	C_1	Y_1	B	O	I	L	A,SA	K,SK	D
＊DID 25	6.35	7.15	10.7	4.76	7.94	11.50	5.56	3.4	6.00	9.3	0.0003	0.0006	0.00002
＊DID 35	9.525	9.52	14.4	6.35	9.52	14.70	7.94	3.5	9.52	14.6	0.001	0.002	0.0009
DID 41	12.70	11.91	17.5	7.14	12.30	17.50	9.53	3.5	9.52	15.4	0.0015	0.003	0.0009
DID 40	12.70	12.70	17.6	7.92	12.70	17.50	9.53	3.5	9.52	16.8	0.002	0.004	0.001
DID 50	15.875	15.88	23.0	10.31	15.88	22.60	12.70	5.2	11.91	21.0	0.003	0.006	0.002
DID 60	19.05	19.05	27.0	11.91	18.26	26.20	15.88	5.2	14.27	25.7	0.006	0.012	0.003
DID 80	25.40	25.40	34.9	15.88	24.61	34.05	19.05	6.8	19.05	33.9	0.011	0.022	0.007
DID100	31.75	31.75	43.3	19.84	31.75	42.75	25.40	8.7	23.83	41.9	0.024	0.048	0.012
DID120	38.10	38.10	53.2	23.01	36.53	50.30	28.58	10.3	28.58	51.4	0.037	0.074	0.02
DID140	44.45	44.45	61.9	28.58	44.45	62.40	34.92	12.3	33.32	57.8	0.068	0.136	0.03
DID160	50.80	50.80	69.9	31.75	50.80	68.10	38.10	14.3	38.10	67.4	0.091	0.182	0.045
DID200	63.50	63.50	90.0	42.87	63.50	84.50	47.60	17.0	47.62	83.4	0.186	0.372	0.106

● Dimensions of wide attachment

Chain No.	Pitch	WA1, WA2, WK1, WK2			WSA1, WSA2, WSK1, WSK2		Common dimensions			Approx. additional weight per attachment (kg)	
	P	C	Y	S	C_1	Y_1	O	Bw	Pw	WA,WSA	WK,WSK
DID 40	12.70	12.70	17.6	7.92	12.70	17.5	4.5	23.0	9.5	0.003	0.006
DID 50	15.875	15.88	23.0	10.31	15.88	22.6	5.5	28.8	11.9	0.007	0.014
DID 60	19.05	19.05	27.0	11.91	18.26	26.2	6.6	34.6	14.3	0.012	0.024
DID 80	25.40	25.40	34.9	15.88	24.61	34.1	9.0	46.1	19.1	0.026	0.052
DID100	31.75	31.75	43.3	19.84	31.75	42.8	11.0	57.8	23.8	0.051	0.102

Note: 1. Those marked with ＊ indicate Bushing Chain.
2. The values of the Avg. tensile strength and Max. allowable load are for the chain (attachments aren't included).

Chain

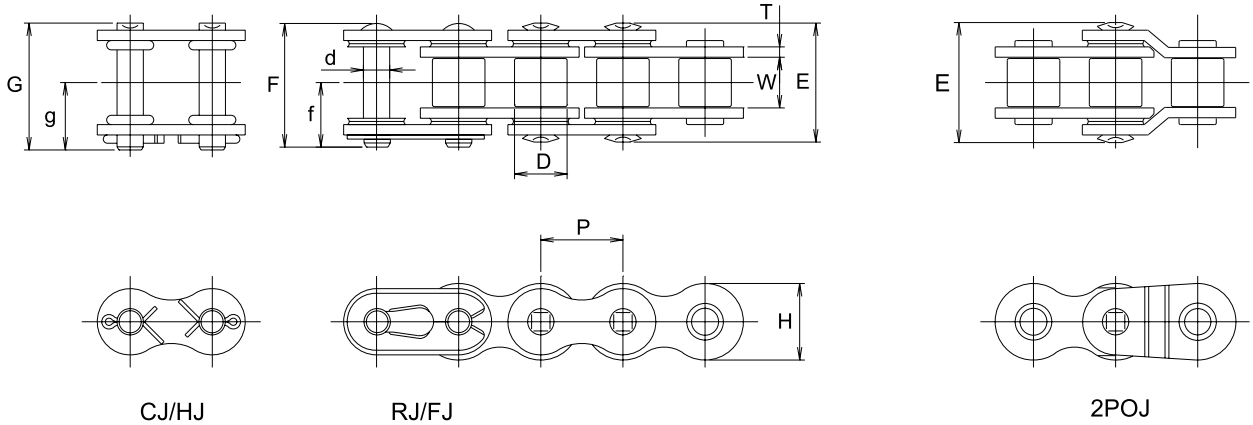

CJ/HJ

CJ (#100)
HJ (#80, 100)

RJ/FJ

RJ/ FJ
(#60 or smaller)

2POJ

Attachment

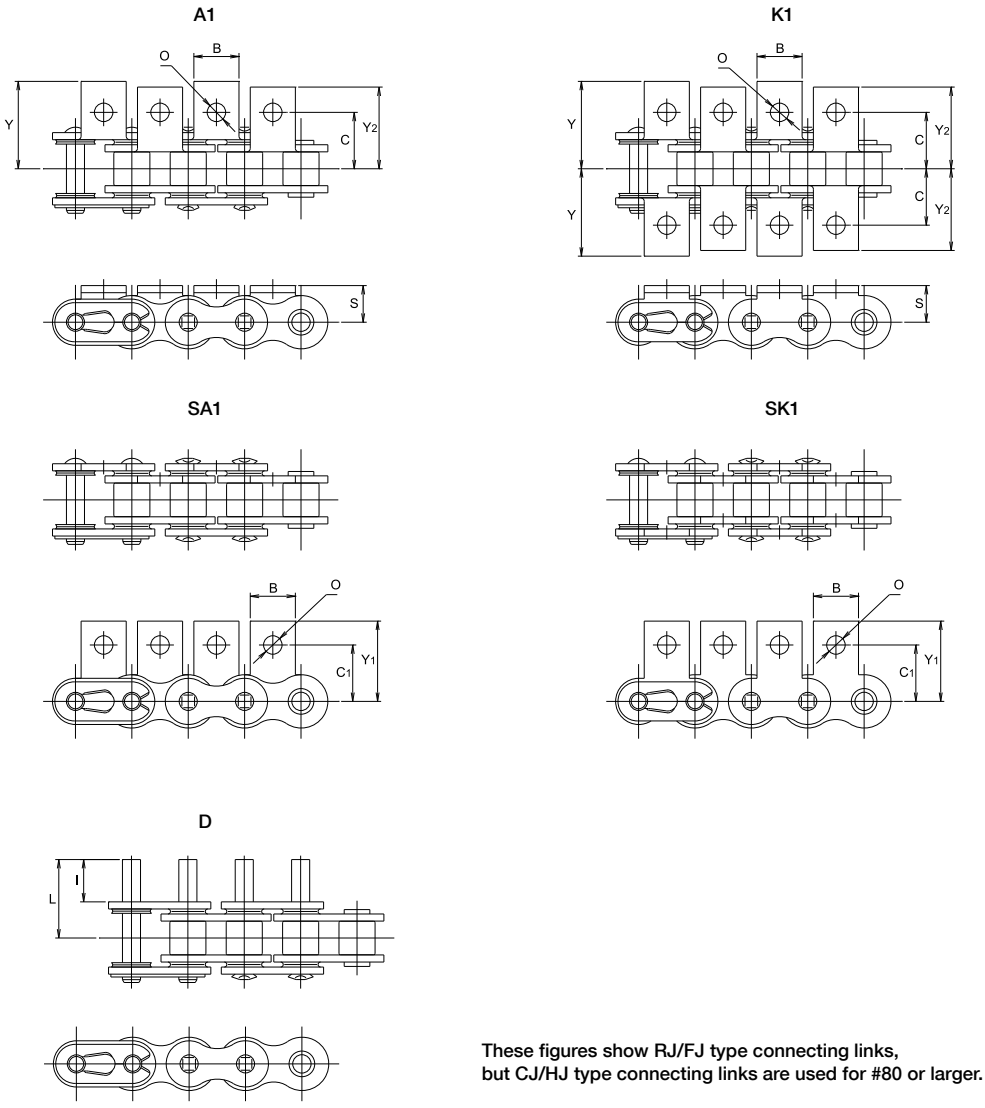

These figures show RJ/FJ type connecting links,
but CJ/HJ type connecting links are used for #80 or larger.

Dimensions of O-Ring/ X-Ring Chains (Single pitch)

● Dimensions of Chain

Unit (mm)

Chain No.		Pitch	Roller link width	Roller (bush) dia.	Pin						Plate		Avg. tensile strength		Max. allowable load		Approx. weight without attachments
Standard	Nickel plated	P	W	D	d	E	F	G	f	g	T	H	kN	kgf	kN	kgf	(kg/m)
DID 40LX	**DID 40LXN**	12.70	7.95	7.92	3.97	20.0	20.0	—	10.7	—	1.5	12.0	16.6	1,690	2.64	270	0.67
DID 50LX	**DID 50LXN**	15.875	9.53	10.16	5.09	23.4	23.9	—	12.8	—	2.0	15.0	27.9	2,830	4.41	450	1.08
DID 60LX	**DID 60LXN**	19.05	12.70	11.91	5.96	29.2	30.0	—	16.0	—	2.4	18.1	40.2	4,080	6.37	650	1.62
DID 80LD	**DID 80LDN**	25.40	15.88	15.88	7.94	36.5	—	38.5	—	20.9	3.2	24.0	72.5	7,360	10.7	1,090	2.83
DID100LD	**DID100LDN**	31.75	19.05	19.05	9.54	44.0	—	46.2	—	24.7	4.0	29.9	107	10,860	17.1	1,740	4.07

Note: The values of the Avg. tensile strength and Max. allowable load are for chain bodies (attachments aren't included).

● Dimensions of attachment

Chain No.		A1, K1				SA1, SK1		Common dimensions		Attachment D		Approx. additional weight per attachment (kg)		
Standard	Nickel plated	C	Y	Y_2	S	C_1	Y_1	B	O	I	L	A,SA	K,SK	D
DID 40LX	**DID 40LXN**	12.70	18.8	17.6	7.92	12.70	17.50	9.53	3.5	9.52	17.9	0.002	0.004	0.001
DID 50LX	**DID 50LXN**	15.88	24.1	23.0	10.31	15.88	22.60	12.70	5.2	11.91	22.1	0.003	0.006	0.002
DID 60LX	**DID 60LXN**	19.05	28.4	27.0	11.91	18.26	26.20	15.88	5.2	14.27	27.2	0.006	0.012	0.003
DID 80LD	**DID 80LDN**	25.40	36.7	34.9	15.88	24.61	34.05	19.05	6.8	19.05	35.4	0.011	0.022	0.007
DID100LD	**DID100LDN**	31.75	45.1	43.3	19.84	31.75	42.75	25.40	8.7	23.83	43.6	0.024	0.048	0.012

Note: Consult us for the use of Attachment WA, WSA, WK, and WSK for O-Ring Chains.

● Dimensions of Chain

Unit (mm)

Chain No.		Pitch	Roller link width	Roller link width	Roller link width	Roller (bush) dia.	Pin				Plate			Avg. tensile strength		Max. allowable load		Approx. weight without attachments
Standard	Nickel plated	P	W1	W2	W3	D	d	E	F	f	T	H	h	kN	kgf	kN	kgf	(kg/m)
DID 40LF	**DID 40LFN**	12.70	7.95	10.65	14.45	7.92	3.97	16.5	17.6	9.5	1.25	12.0	10.4	16.6	1,690	2.64	270	0.58
DID 50LF	**DID 50LFN**	15.875	9.53	12.80	18.15	10.16	5.09	20.3	21.9	11.6	1.50	15.0	13.0	27.9	2,830	4.41	450	0.92
DID 60LF	**DID 60LFN**	19.05	12.70	16.55	22.9	11.91	5.96	25.4	26.9	14.3	1.80	18.1	15.6	40.2	4,080	6.37	650	1.37

● Dimensions of attachment

Chain No.		A1, K1			SA1, SK1		Common dimensions		D		Approx. additional weight per attachment (kg)		
Standard	Nickel plated	C	Y	S	C1	Y1	B	O	I	L	A,SA	K,SK	D
DID 40LF	**DID 40LFN**	12.7	17.6	7.92	12.70	17.5	9.53	3.5	9.52	16.8	0.002	0.004	0.002
DID 50LF	**DID 50LFN**	15.88	23.0	10.31	15.88	22.6	12.70	5.2	11.91	21.0	0.003	0.006	0.003
DID 60LF	**DID 60LFN**	19.05	27.0	11.91	18.26	26.2	15.88	5.2	14.27	25.7	0.005	0.010	0.007

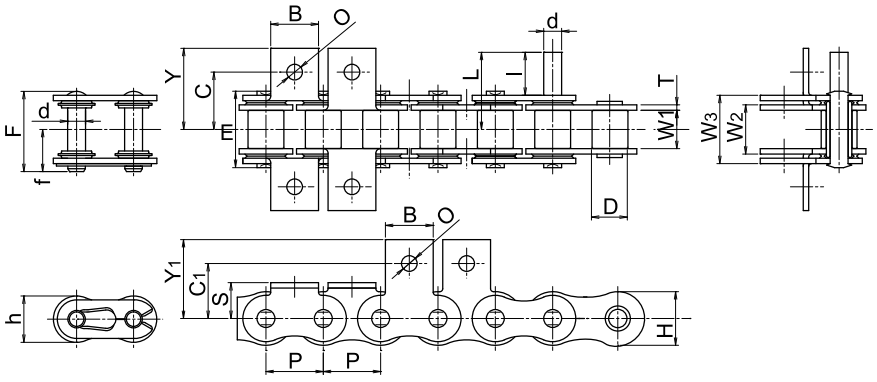

Chain

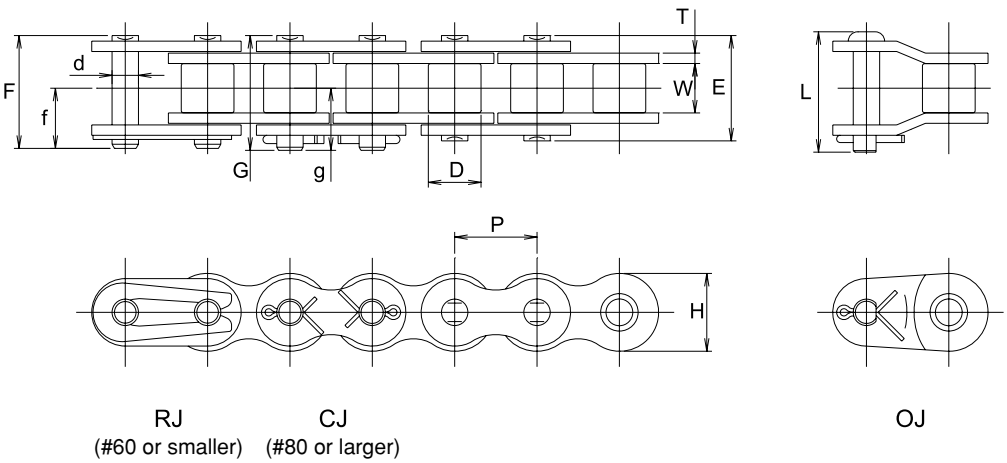

Attachment

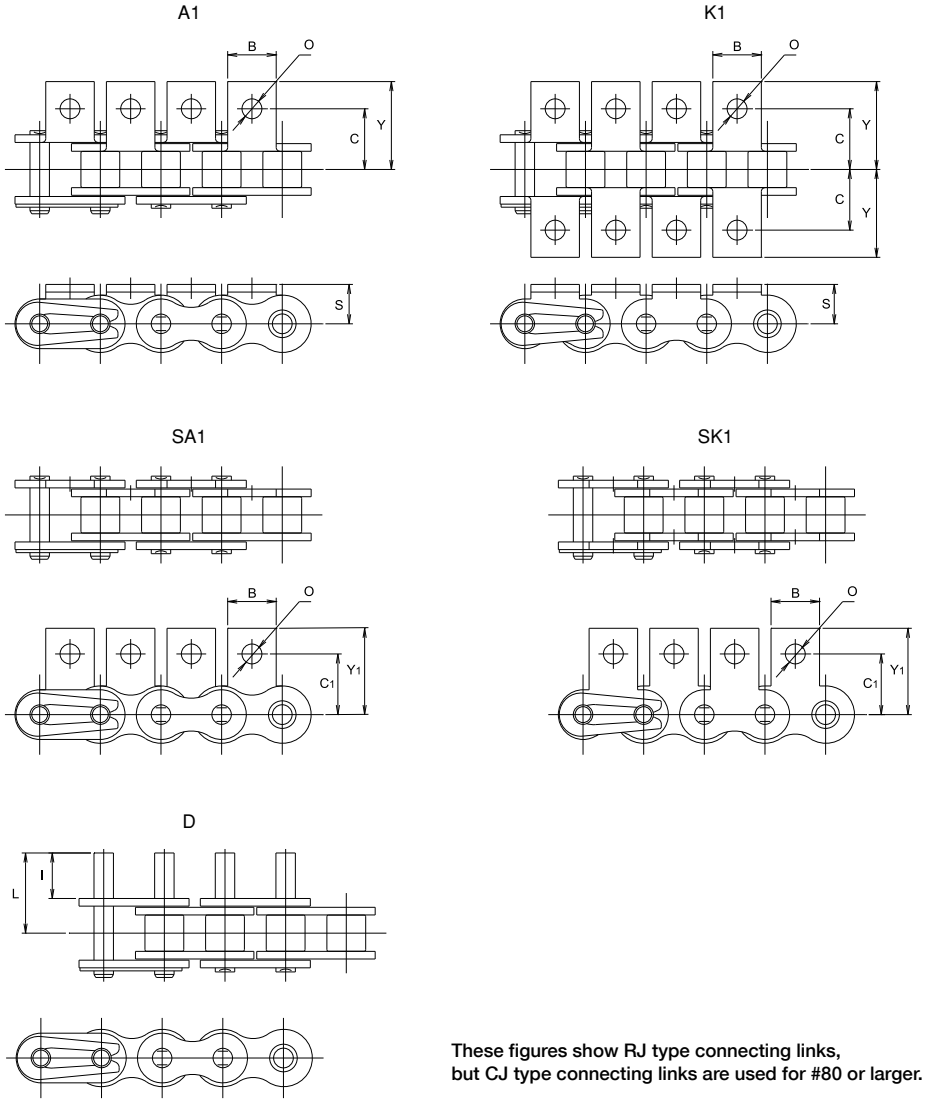

These figures show RJ type connecting links,
but CJ type connecting links are used for #80 or larger.

Dimensions of Sintered Bushing Roller Chain (Single pitch)

● Dimensions of Chain

Unit (mm)

Chain No.		Pitch	Roller link width	Roller (bush) dia.	Pin							Plate		Avg. tensile strength		Max. allowable load		Approx. weight without attachments
Standard	Nickel plated	P	W	D	d	E	F	G	L	f	g	T	H	kN	kgf	kN	kgf	(kg/m)
DID C40 UR	**DID C40 URN**	12.70	7.95	7.92	3.97	16.5	17.6	—	19.1	9.5	—	1.5	12.0	15.6	1,580	2.64	270	0.63
DID C50 UR	**DID C50 URN**	15.875	9.53	10.16	5.09	20.3	21.9	—	23.2	11.6	—	2.0	15.0	25.4	2,580	4.31	440	1.06
DID C60 UR	**DID C60 URN**	19.05	12.70	11.91	5.96	25.4	26.9	—	29.8	14.3	—	2.4	18.1	37.2	3,780	6.27	640	1.44
DID C80 UR	**DID C80 URN**	25.40	15.88	15.88	7.94	32.6	—	35.4	37.1	—	19.0	3.2	24.0	68.6	6,960	10.7	1,090	2.67

● Dimensions of attachment

Chain No.		Pitch	A1, K1			SA, SK		Common dimensions		D		Approx. additional weight per attachment (kg)		
Standard	Nickel plated	P	C	Y	S	C_1	Y_1	B	O	I	L	A,SA	K,SK	D
DID C40 UR	**DID C40 URN**	12.70	12.70	17.6	7.92	12.70	17.50	9.53	3.5	9.52	16.8	0.002	0.004	0.001
DID C50 UR	**DID C50 URN**	15.875	15.88	23.0	10.31	15.88	22.60	12.70	5.2	11.91	21.0	0.003	0.006	0.002
DID C60 UR	**DID C60 URN**	19.05	19.05	27.0	11.91	18.26	26.20	15.88	5.2	14.27	25.7	0.006	0.012	0.003
DID C80 UR	**DID C80 URN**	25.40	25.40	34.9	15.88	24.61	34.05	19.05	6.8	19.05	33.9	0.011	0.022	0.007

Note: 1. The values of the Avg. tensile strength and Max. allowable load are for chain bodies (attachments aren't included).
2. The alphabet C following DID indicates that the chain is for a conveyor system, and the thickness of the inner plate is the same as the outer plate. (The thickness of the inner plate of the Bushing Roller Chain for Transmission is thicker.)

Chain

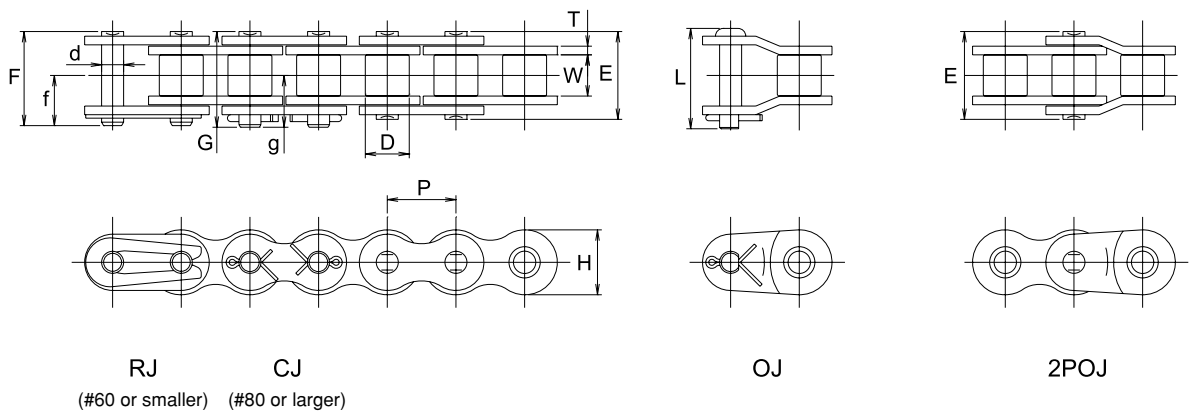

RJ (#60 or smaller) CJ (#80 or larger) OJ 2POJ

Attachment

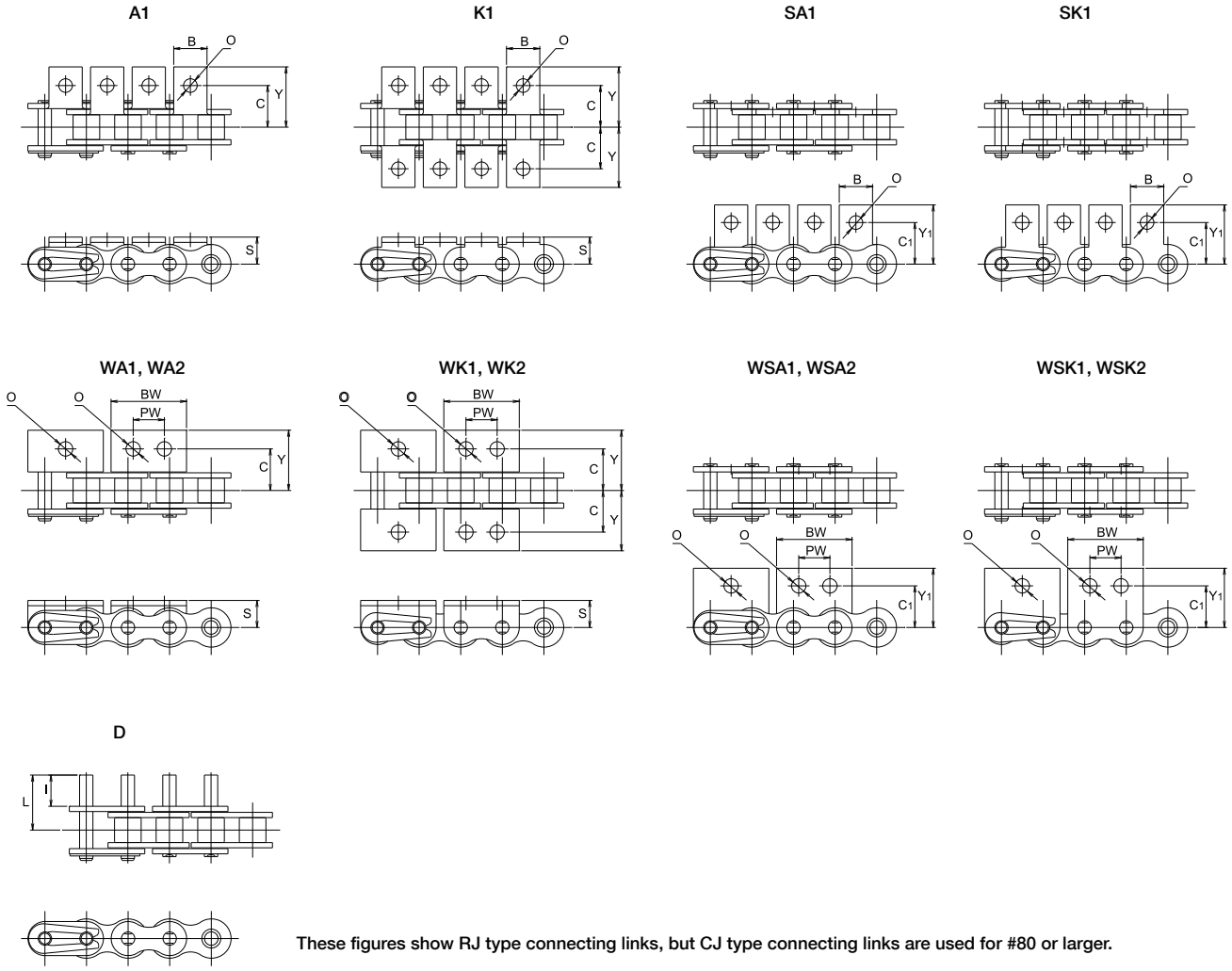

These figures show RJ type connecting links, but CJ type connecting links are used for #80 or larger.

Dimensions of Nickel plated Chain (Single pitch)

● Dimensions of Chain

Unit (mm)

Chain No.	Pitch	Roller link width	Roller (bush) dia.	Pin							Plate		Avg. tensile strength		Max. allowable load		Approx. weight without attachments
	P	W	D	d	E	F	G	L	f	g	T	H	kN	kgf	kN	kgf	(kg/m)
＊DID 25N	6.35	3.18	(3.30)	2.31	7.8	8.5	—	—	4.7	—	0.72	5.9	4.02	410	0.63	65	0.13
＊DID 35N	9.525	4.78	(5.08)	3.59	12.0	13.1	—	—	7.3	—	1.25	9.0	9.31	950	1.47	150	0.32
DID 41N	12.70	6.38	7.77	3.59	13.7	14.6	—	15.5	7.9	—	1.20	9.6	10.1	1,030	1.67	170	0.39
DID 40N	12.70	7.95	7.92	3.97	16.5	17.6	18.1	19.1	9.5	10.1	1.50	12.0	16.6	1,700	2.64	270	0.63
DID 50N	15.875	9.53	10.16	5.09	20.3	21.9	22.1	23.2	11.6	12.1	2.00	15.0	27.9	2,850	4.41	450	1.06
DID 60N	19.05	12.7	11.91	5.96	25.4	26.9	27.9	29.8	14.3	15.1	2.40	18.1	40.2	4,100	6.37	650	1.44
DID 80N	25.40	15.88	15.88	7.94	32.6	—	35.4	37.1	—	19.0	3.20	24.0	78.4	8,000	10.7	1,100	2.55
DID100N	31.75	19.05	19.05	9.54	39.5	—	42.5	45.2	—	22.7	4.00	29.9	118	12,100	17.1	1,750	3.79
DID120N	38.10	25.4	22.23	11.11	49.7	—	53.0	54.0	—	28.2	4.80	35.9	166	17,000	24.5	2,500	5.49
DID140N	44.45	25.4	25.4	12.71	53.6	—	58.4	59.6	—	31.6	5.60	41.9	215	22,000	32.3	3,300	7.11
DID160N	50.80	31.75	28.58	14.29	63.6	—	68.2	69.7	—	36.5	6.40	47.8	269	27,500	41.2	4,200	9.82

● Dimensions of attachment

Chain No.	Pitch	A1, K1			SA1, SK1		Common dimensions		Attachment D		Approx. additional weight per attachment (kg)		
	P	C	Y	S	C_1	Y_1	B	O	I	L	A,SA	K,SK	D
＊DID 25N	6.35	7.15	10.7	4.76	7.94	11.50	5.56	3.4	6.00	9.2	0.0003	0.0006	0.00002
＊DID 35N	9.525	9.52	14.4	6.35	9.52	14.70	7.94	3.5	9.52	14.6	0.001	0.002	0.0009
DID 41N	12.70	11.91	17.5	7.14	12.30	17.50	9.53	3.5	9.52	15.4	0.0015	0.003	0.0009
DID 40N	12.70	12.70	17.6	7.92	12.70	17.50	9.53	3.5	9.52	16.8	0.002	0.004	0.001
DID 50N	15.875	15.88	23.0	10.31	15.88	22.60	12.70	5.2	11.91	21.0	0.003	0.006	0.002
DID 60N	19.05	19.05	27.0	11.91	18.26	26.20	15.88	5.2	14.27	25.7	0.006	0.012	0.003
DID 80N	25.40	25.40	34.9	15.88	24.61	34.05	19.05	6.8	19.05	33.9	0.011	0.022	0.007
DID100N	31.75	31.75	43.3	19.84	31.75	42.75	25.40	8.7	23.83	41.9	0.024	0.048	0.012
DID120N	38.10	38.10	53.2	23.02	36.51	50.30	28.58	10.3	28.58	51.4	0.037	0.074	0.02
DID140N	44.45	44.45	61.9	28.58	44.45	62.40	34.92	12.3	33.32	57.8	0.068	0.136	0.03
DID160N	50.80	50.80	69.9	31.75	50.80	68.10	38.10	14.3	38.10	67.4	0.091	0.182	0.045

● Dimensions of wide attachment

Chain No.	Pitch	WA1, WA2, WK1, WK2			WSA1, WSA2, WSK1, WSK2		Common dimensions			Approx. additional weight per attachment (kg)	
	P	C	Y	S	C_1	Y_1	O	Bw	Pw	WA,WSA	WK,WSK
DID 40N	12.70	12.70	17.6	7.92	12.70	17.5	4.5	23.0	9.5	0.003	0.006
DID 50N	15.875	15.88	23.0	10.31	15.88	22.6	5.5	28.8	11.9	0.007	0.014
DID 60N	19.05	19.05	27.0	11.91	18.26	26.2	6.6	34.6	14.3	0.012	0.024
DID 80N	25.40	25.40	34.9	15.88	24.61	34.1	9.0	46.1	19.1	0.026	0.052
DID100N	31.75	31.75	43.3	19.84	31.75	42.8	11.0	57.8	23.8	0.051	0.102

Note: 1. Those marked with ＊ indicate Bushing Chain.
2. The values of the Avg. tensile strength and Max. allowable load are for chain bodies (attachments aren't included).

Chain

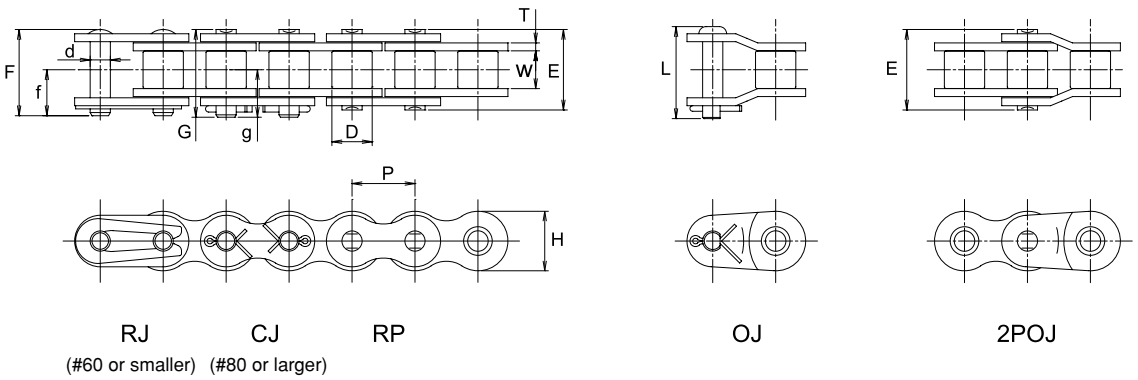

RJ (#60 or smaller) CJ (#80 or larger) RP OJ 2POJ

Attachment

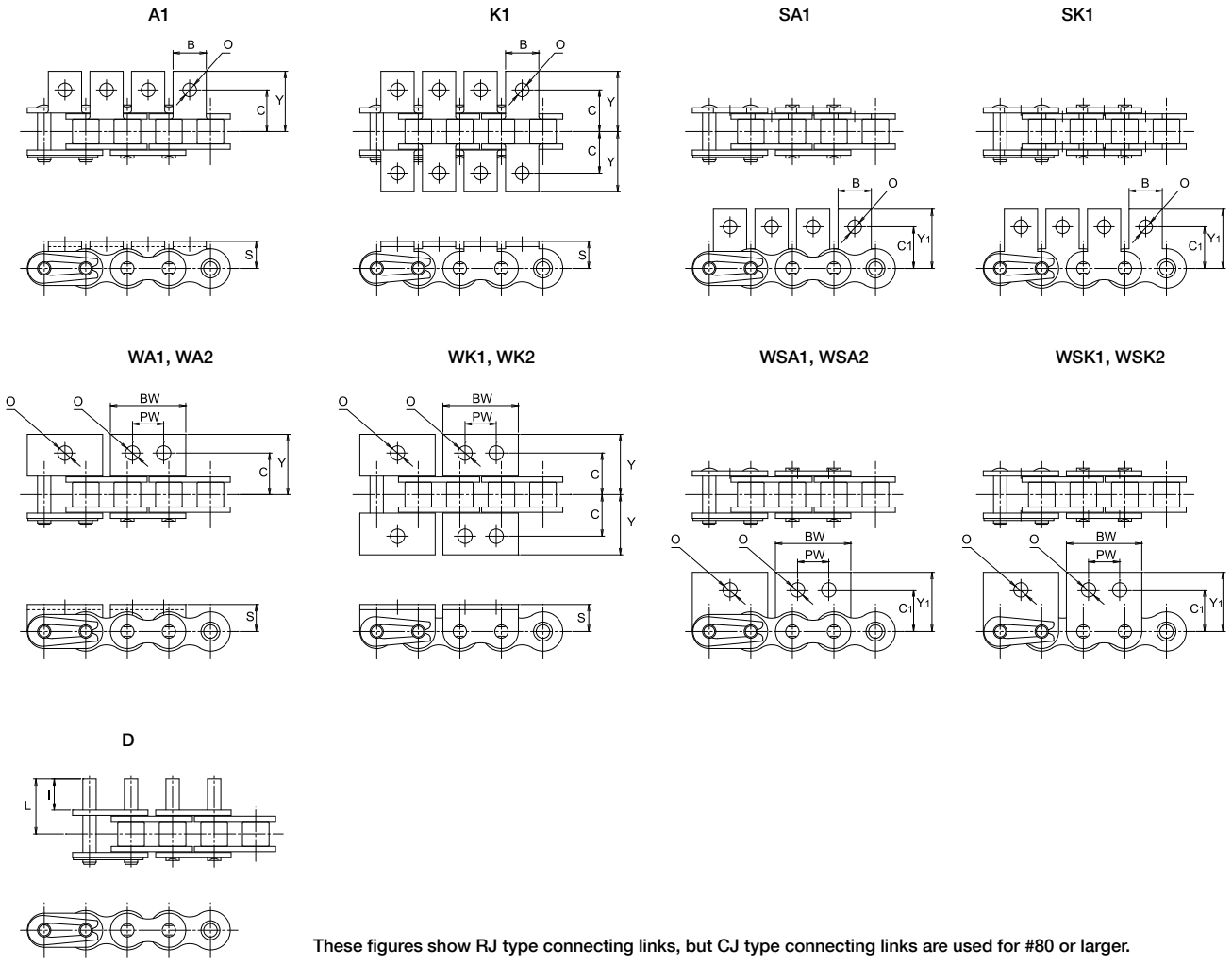

These figures show RJ type connecting links, but CJ type connecting links are used for #80 or larger.

Dimensions of High Guard Chain (Single pitch)

● Dimensions of Chain

Unit (mm)

Chain No.	Pitch	Roller link width	Roller (bush) dia.	Pin							Plate		Avg. tensile strength		Max. allowable load		Approx. weight without attachments
	P	W	D	d	E	F	G	L	f	g	T	H	kN	kgf	kN	kgf	(kg/m)
＊DID 35E	9.525	4.78	(5.08)	3.59	12.0	13.1	—	—	7.3	—	1.25	9.0	9.31	950	1.47	150	0.32
DID 40E	12.70	7.95	7.92	3.97	16.5	17.6	18.1	19.1	9.5	10.1	1.5	12.0	10.1	1,030	1.67	170	0.63
DID 50E	15.875	9.53	10.16	5.09	20.3	21.9	22.1	23.2	11.6	12.1	2.0	15.0	27.9	2,850	4.41	450	1.06
DID 60E	19.05	12.70	11.91	5.96	25.4	26.9	27.9	29.8	14.3	15.1	2.4	18.1	40.2	4,100	6.37	650	1.44
DID 80E	25.40	15.88	15.88	7.94	32.6	—	35.4	37.1	—	19.0	3.2	24.0	78.4	8,000	10.7	1,100	2.55
DID100E	31.75	19.05	19.05	9.54	39.5	—	42.5	45.2	—	22.7	4.0	29.9	118	12,100	17.1	1,750	3.79
DID120E	38.10	25.40	22.23	11.11	49.7	—	53.0	54.0	—	28.2	4.8	35.9	166	17,000	24.5	2,500	5.49

● Dimensions of attachment

Chain No.	Pitch	A1, K1			SA1, SK1		Common dimensions		D		Approx. additional weight per attachment (kg)		
	P	C	Y	S	C_1	Y_1	B	O	I	L	A,SA	K,SK	D
＊DID 35E	9.525	9.52	14.4	6.35	9.52	14.70	7.94	3.5	9.52	14.6	0.001	0.002	0.0009
DID 40E	12.70	12.70	17.6	7.92	12.70	17.50	9.53	3.5	9.52	16.8	0.002	0.004	0.001
DID 50E	15.875	15.88	23.0	10.31	15.88	22.60	12.70	5.2	11.91	21.0	0.003	0.006	0.002
DID 60E	19.05	19.05	27.0	11.91	18.26	26.20	15.88	5.2	14.27	25.7	0.006	0.012	0.003
DID 80E	25.40	25.40	34.9	15.88	24.61	34.05	19.05	6.8	19.05	33.9	0.011	0.022	0.007
DID100E	31.75	31.75	43.3	19.84	31.75	42.75	25.40	8.7	23.83	41.9	0.024	0.048	0.012
DID120E	38.10	38.10	53.2	23.02	36.51	50.30	28.58	10.3	28.58	51.4	0.037	0.074	0.02

● Dimensions of wide attachment

Chain No.	Pitch	WA1, WA2, WK1, WK2			WSA1, WSA2, WSK1, WSK2		Common dimensions			Approx. additional weight per attachment (kg)	
	P	C	Y	S	C_1	Y_1	O	Bw	Pw	WA,WSA	WK,WSK
DID 40E	12.70	12.70	17.6	7.92	12.70	17.5	4.5	23.0	9.5	0.003	0.006
DID 50E	15.875	15.88	23.0	10.31	15.88	22.6	5.5	28.8	11.9	0.007	0.014
DID 60E	19.05	19.05	27.0	11.91	18.26	26.2	6.6	34.6	14.3	0.012	0.024
DID 80E	25.40	25.40	34.9	15.88	24.61	34.1	9.0	46.1	19.1	0.026	0.052

Note: 1. Those marked with ＊ indicate Bushing Chain.
2. The values of the Avg. tensile strength and Max. allowable load are for chain bodies (attachments aren't included).

Chain

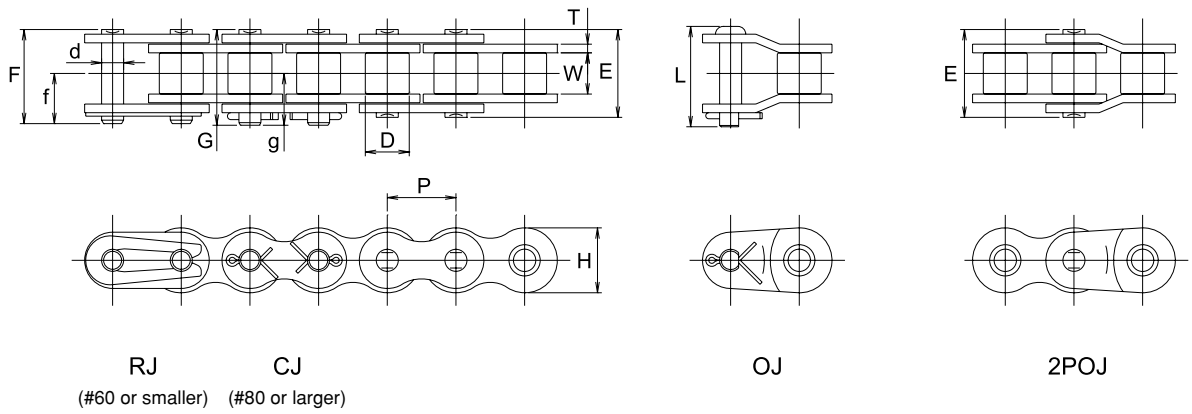

Attachment

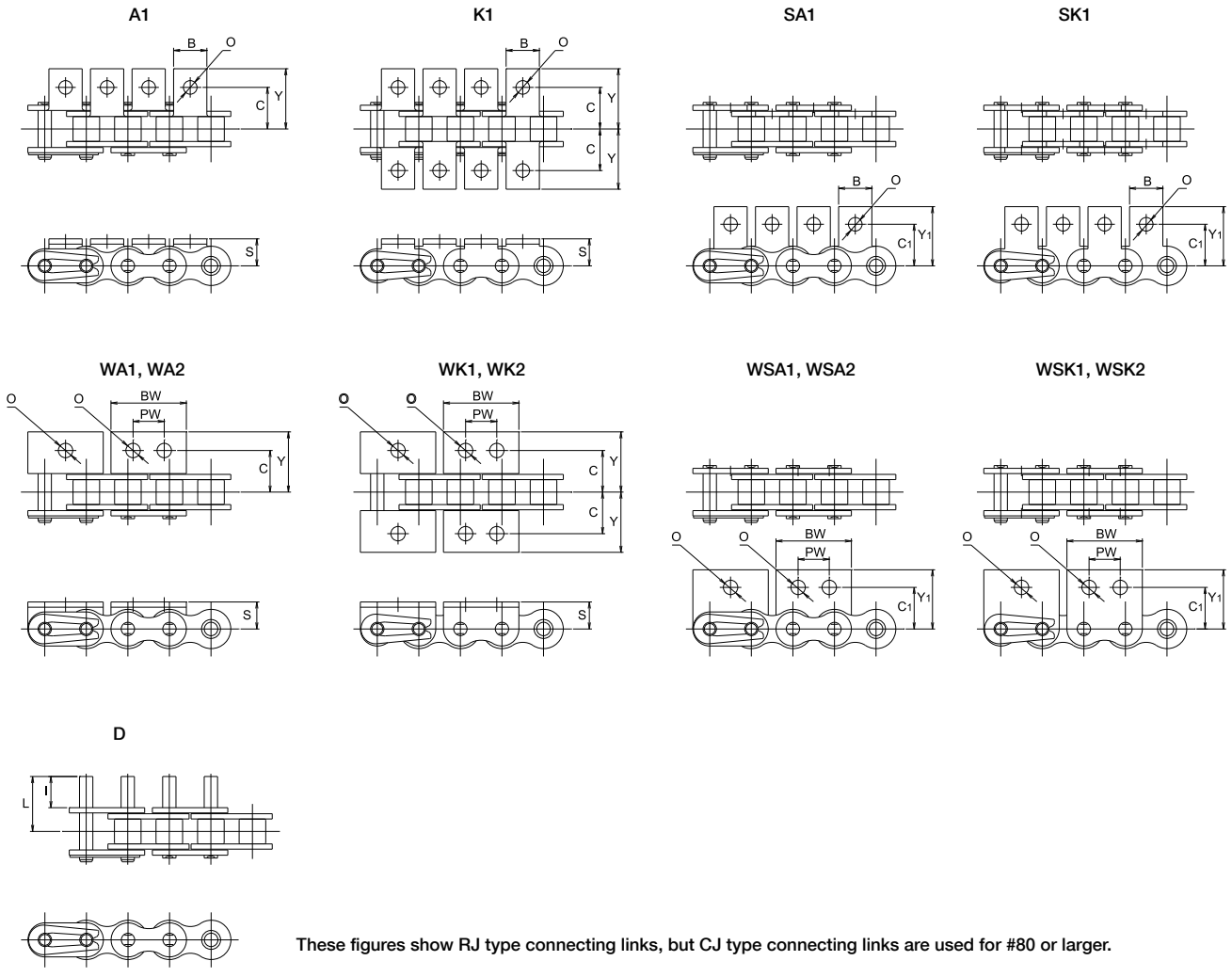

These figures show RJ type connecting links, but CJ type connecting links are used for #80 or larger.

Dimensions for Double Guard Chain (Single Pitch)

● Dimensions of Chain

Unit (mm)

Chain No.	Pitch	Roller link width	Roller (bush) dia.	Pin							Plate		Avg. tensile strength		Max. allowable load		Approx. weight without attachments
	P	W	D	d	E	F	G	L	f	g	T	H	kN	kgf	kN	kgf	(kg/m)
DID 40WG	12.70	7.95	7.92	3.97	16.5	17.6	—	19.1	9.5	—	1.5	12.0	16.6	1,700	2.64	270	0.63
DID 50WG	15.875	9.53	10.16	5.09	20.3	21.9	—	23.2	11.6	—	2.0	15.0	27.9	2,850	4.41	450	1.06
DID 60WG	19.05	12.70	11.91	5.96	25.4	26.9	27.9	29.8	14.3	15.1	2.4	18.1	40.2	4,100	6.37	650	1.44
DID 80WG	25.40	15.88	15.88	7.94	32.6	—	35.4	37.1	—	19.0	3.2	24.0	78.4	8,000	10.7	1,100	2.55

● Dimensions of attachment

Chain No.	Pitch	A1, K1			SA1, SK1		Common dimensions		Attachment D		Approx. additional weight per attachment (kg)		
	P	C	Y	S	C_1	Y_1	B	O	I	L	A,SA	K,SK	D
DID 40WG	12.70	12.70	17.6	7.92	12.70	17.50	9.53	3.5	9.52	16.8	0.002	0.004	0.001
DID 50WG	15.875	15.88	23.0	10.31	15.88	22.60	12.70	5.2	11.91	21.0	0.003	0.006	0.002
DID 60WG	19.05	19.05	27.0	11.91	18.26	26.20	15.88	5.2	14.27	25.7	0.006	0.012	0.003
DID 80WG	25.40	25.40	34.9	15.88	24.61	34.05	19.05	6.8	19.05	33.9	0.011	0.022	0.007

● Dimensions of wide attachment

Chain No.	Pitch	WA1, WA2, WK1, WK2			WSA1, WSA2, WSK1, WSK2		Common dimensions			Approx. additional weight per attachment (kg)	
	P	C	Y	S	C_1	Y_1	O	Bw	Pw	WA,WSA	WK,WSK
DID 40WG	12.70	12.70	17.6	7.92	12.70	17.5	4.5	23.0	9.5	0.003	0.006
DID 50WG	15.875	15.88	23.0	10.31	15.88	22.6	5.5	28.8	11.9	0.007	0.014
DID 60WG	19.05	19.05	27.0	11.91	18.26	26.2	6.6	34.6	14.3	0.012	0.024
DID 80WG	25.40	25.40	34.9	15.88	24.61	34.1	9.0	46.1	19.1	0.026	0.052

Note: The values of the Avg. tensile strength and Max. allowable load are for chain bodies (attachments aren't included).

Chain

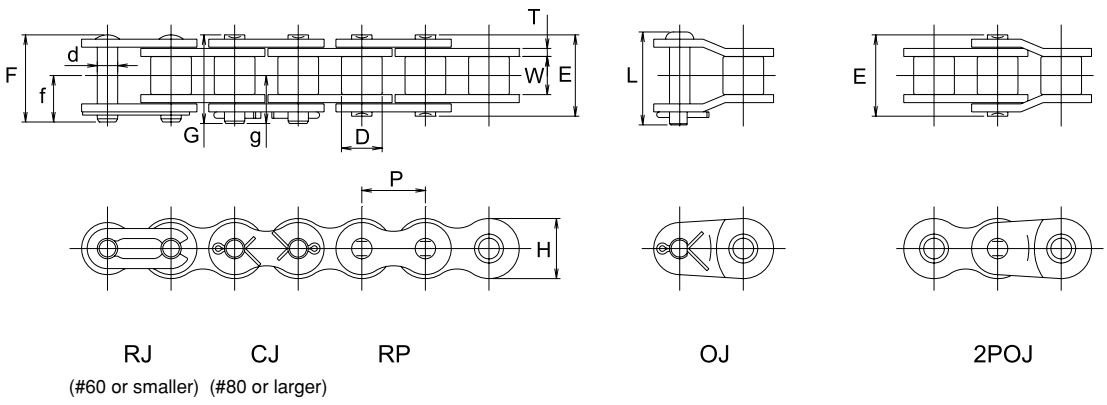

Attachment

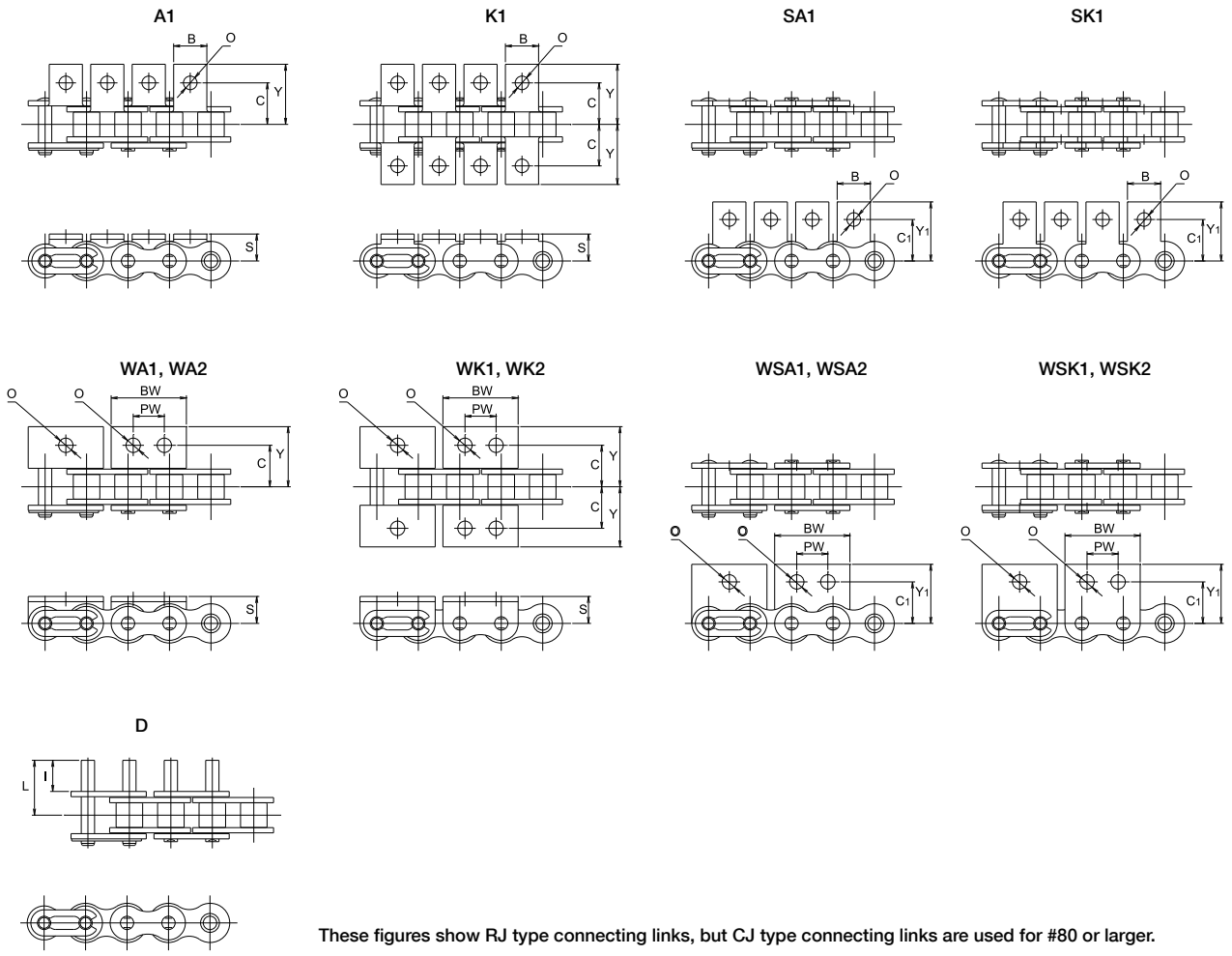

These figures show RJ type connecting links, but CJ type connecting links are used for #80 or larger.

Dimensions of Stainless Steel Chain (Single pitch)

● Dimensions of Chain

Unit (mm)

Chain No.	Pitch	Roller link width	Roller (bush) dia.	Pin							Plate			Avg. tensile strength		Max. allowable load		Approx. weight
	P	W	D	d	E	F	G	f	L	g	T	H	h	kN	kgf	kN	kgf	(kg/m)
＊DID 25SS	6.35	3.18	(3.30)	2.31	7.65	8.65	-	4.83	-	-	0.75	5.8	5.0	3.33	340	0.12	12	0.14
＊DID 35SS	9.525	4.78	(5.08)	3.59	11.55	12.90	-	7.13	13.85	-	1.25	8.8	7.3	7.55	770	0.26	26	0.33
DID 40SS	12.70	7.95	7.92	3.97	16.15	17.65	-	9.58	19.05	-	1.50	11.7	10.1	13.3	1,350	0.44	45	0.63
DID 50SS	15.875	9.53	10.16	5.08	20.40	21.80	-	11.60	23.05	-	2.00	14.6	12.6	20.9	2,120	0.69	70	1.04
DID 60SS	19.05	12.70	11.91	5.96	25.40	26.90	-	14.20	29.55	-	2.40	17.5	15.0	30.0	3,050	1.03	105	1.50
DID 80SS	25.40	15.88	15.88	7.94	32.30	-	35.40	-	37.10	19.25	3.20	23.0	19.7	53.4	5,420	1.77	180	2.62
DID100SS	31.75	19.05	19.05	9.54	40.40	-	43.35	-	43.75	23.15	4.00	28.9	24.8	82.3	8,360	2.55	259	4.09

● Dimensions of Chain

Chain No.	Pitch	Roller link width	Roller (bush) dia.	Pin							Plate			Avg. tensile strength		Max. allowable load		Approx. weight
	P	W	D	d	E	F	G	f	L	g	T	H	h	kN	kgf	kN	kgf	(kg/m)
DID 40 SSK	12.70	7.95	7.92	3.97	16.15	17.65	-	9.58	19.05	-	1.50	11.7	10.1	13.3	1,350	0.69	70	0.63
DID 50 SSK	15.875	9.53	10.16	5.09	20.40	21.80	-	11.60	23.05	-	2.00	14.6	12.6	20.9	2,120	1.03	100	1.04
DID 60 SSK	19.05	12.70	11.91	5.96	25.40	26.90	-	14.20	29.55	-	2.40	17.5	15.0	30.0	3,050	1.57	160	1.50
DID 80 SSK	25.40	15.88	15.88	7.94	32.30	-	35.40	-	37.10	19.25	3.20	23.0	19.7	53.4	5,420	2.65	270	2.62

● Dimensions of attachment

Chain No.	A1, K1			SA1, SK1		Common dimensions		D		Approx. additional weight per attachment (kg)		
	C	Y	S	C_1	Y_1	B	O	I	L	A,SA	K,SK	D
＊DID 25SS	7.1	10.7	4.8	7.95	11.9	5.6	2.8	6.00	13.90	0.0003	0.0006	0.0002
＊DID 35SS	9.5	13.8	6.4	9.50	14.25	7.9	2.8	9.52	21.60	0.0009	0.0018	0.0007
DID 40SS.SSK	12.7	17.4	7.9	12.70	17.3	9.5	3.6	9.52	25.80	0.0014	0.0028	0.0009
DID 50SS.SSK	15.9	22.3	10.3	15.90	22.3	12.7	5.2	11.91	32.30	0.0032	0.0064	0.0017
DID 60SS.SSK	19.1	27.2	11.9	18.30	26.3	15.9	5.2	14.27	40.00	0.0056	0.012	0.0034
DID 80SS.SSK	25.4	35.2	15.9	24.60	34.2	19.1	6.8	19.05	52.35	0.013	0.026	0.007
DID 100SS	31.8	44.7	19.8	31.8	44.1	25.4	8.7	-	-	0.025	0.050	-

● Dimensions of wide attachment

Chain No.	WA1, WA2, WK1, WK2			WSA1, WSA2, WSK1, WSK2		Common dimensions			Approx. additional weight per attachment (kg)	
	C	Y	S	C_1	Y_1	O	Bw	Pw	WA,WSA	WK,WSK
DID 40SS.SSK	12.7	17.4	7.9	12.70	17.3	3.6	23.0	12.70	0.003	0.006
DID 50SS.SSK	15.9	23.0	10.3	15.90	22.6	5.2	28.8	15.88	0.007	0.014
DID 60SS.SSK	19.05	28.2	11.9	18.30	26.7	5.2	34.6	19.05	0.013	0.026
DID 80SS.SSK	25.4	36.6	15.9	24.60	35.4	6.8	46.1	25.40	0.03	0.06
DID 100SS	31.75	44.9	19.8	31.80	44.0	8.3	57.7	31.75	0.06	0.12

Note: 1. Those marked with ＊ indicate Bushing Chain.
2. The values of the Avg. tensile strength and Max. allowable load are for chain bodies (attachments aren't included).

Chain

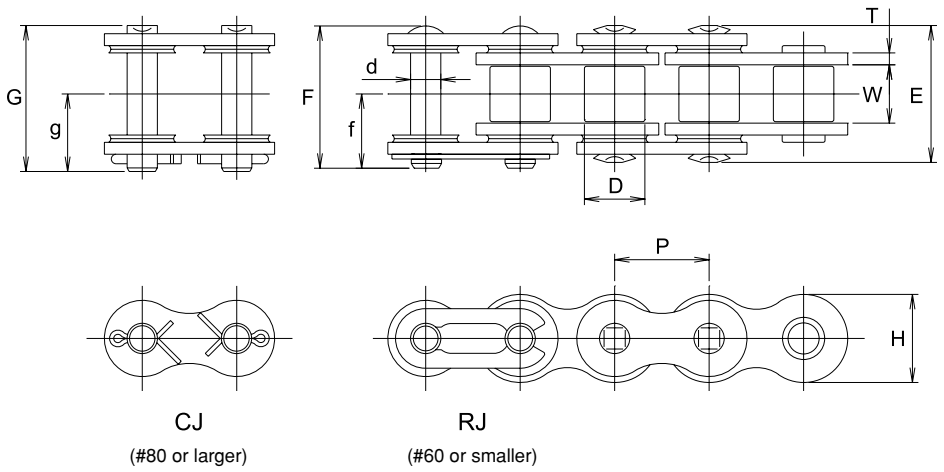

Attachment

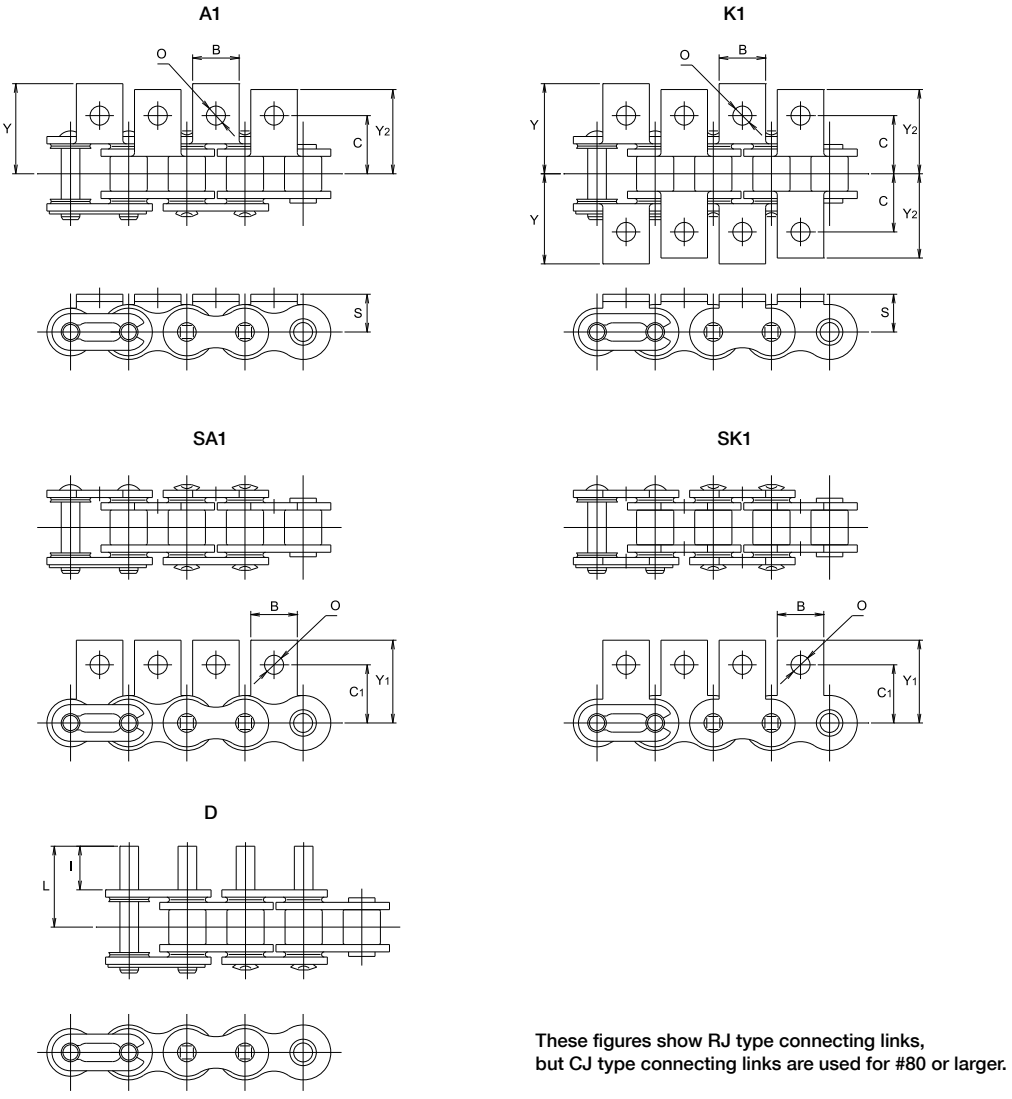

These figures show RJ type connecting links,
but CJ type connecting links are used for #80 or larger.

Dimensions of Stainless Steel X-Ring Chains (Single pitch)

● Dimensions of Chain

Unit (mm)

Chain No.	Pitch P	Roller link width W	Roller (bush) dia. D	Pin						Plate		Avg. tensile strength		Max. allowable load		Approx. weight kg/m
				d	E	F	G	f	g	T	H	kN	kgf	kN	kgf	
DID40SSLT	12.70	7.95	7.92	3.96	20.0	20.3	-	10.7	-	1.5	11.7	13.3	1,350	0.44	40	0.68
DID50SSLT	15.875	9.53	10.16	5.08	23.4	24.3	-	12.8	-	2.0	14.6	20.9	2,120	0.69	70	1.1
DID60SSLT	19.05	12.70	11.91	5.95	29.2	29.9	-	15.6	-	2.4	17.5	30.0	3,050	1.03	100	1.6
DID80SSLT	25.40	15.88	15.88	7.93	36.5	-	39.0	-	20.7	3.2	23.0	53.4	5,420	1.77	180	2.7

● Dimensions of attachment

Chain No.	Pitch P	A1, K1				SA1, SK1		Common dimensions		D		Approx. additional weight per attachment (kg)		
		C	Y	Y_2	S	C_1	Y_1	B	O	I	L	A,SA	K,SK	D
DID40SSLT	12.70	12.7	18.6	17.5	7.9	12.7	17.3	9.5	3.6	9.52	17.9	0.002	0.004	0.001
DID50SSLT	15.875	15.9	23.4	22.3	10.3	15.9	22.3	12.7	5.2	11.91	22.1	0.003	0.006	0.002
DID60SSLT	19.05	19.0	28.6	27.3	11.9	18.3	26.3	15.9	5.2	14.27	27.1	0.006	0.012	0.003
DID80SSLT	25.40	25.4	36.9	35.3	15.9	24.6	34.2	19.1	6.8	19.05	35.4	0.011	0.022	0.007

Note: The values of the Avg. tensile strength and Max. allowable load are for chain bodies (attachments aren't included).

Chain

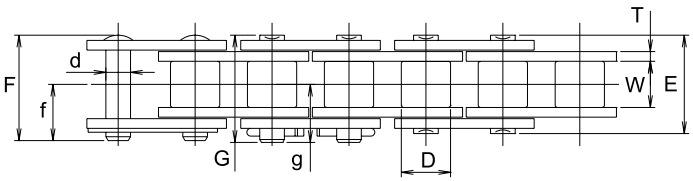

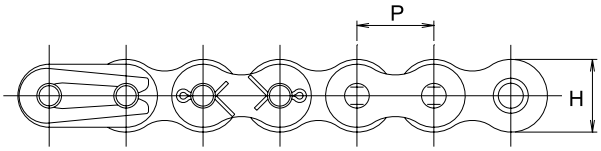

RJ (#60 or smaller) CJ (#80 or larger) RP

Attachment

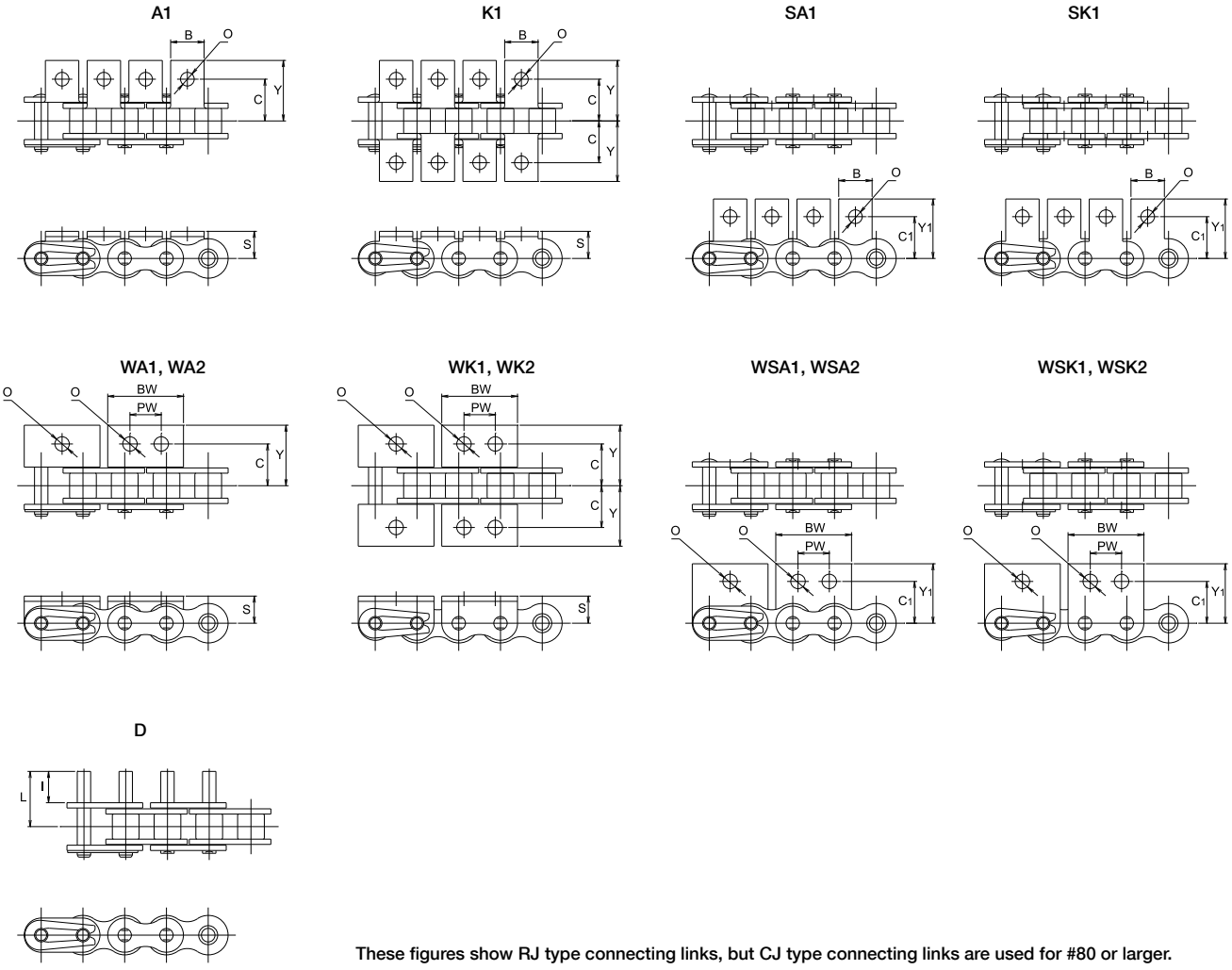

These figures show RJ type connecting links, but CJ type connecting links are used for #80 or larger.

Dimensions of Low Temperature Resistant Chain (Single pitch)

● Dimensions of Chain

Unit (mm)

Chain No.	Pitch	Roller link width	Roller (bush) dia.	Pin						Plate		Max. allowable load						Approx. weight without attachments
												+80℃~-10℃		-11℃~-30℃		-31℃~-40℃		
	P	W	D	d	E	F	G	f	g	T	H	kN	kgf	kN	kgf	kN	kgf	(kg/m)
DID 40TK	12.70	7.95	7.92	3.97	16.5	17.6	—	9.5	—	1.5	12.0	3.72	380	2.54	260	2.15	220	0.63
DID 50TK	15.875	9.53	10.16	5.09	20.3	21.9	—	11.6	—	2.0	15.0	6.86	700	4.80	490	3.92	400	1.06
DID 60TK	19.05	12.70	11.91	5.96	25.4	26.9	—	14.3	—	2.4	18.1	9.31	950	6.47	660	5.39	550	1.44
DID 80TK	25.40	15.88	15.88	7.94	32.6	—	35.5	—	19.0	3.2	24.0	14.7	1,490	10.3	1,050	8.53	870	2.55
DID100TK	31.75	19.05	19.05	9.54	39.5	—	42.6	—	22.7	4.0	29.9	22.6	2,290	15.8	1,600	13.0	1,320	3.79
DID120TK	38.10	25.40	22.23	11.11	49.7	—	53.8	—	28.9	4.8	35.9	30.4	3,090	21.3	2,160	17.6	1,790	5.49
DID140TK	44.45	25.40	25.40	12.71	53.6	—	58.4	—	31.7	5.6	41.9	40.2	4,080	28.1	2,850	23.2	2,360	7.11
DID160TK	50.80	31.75	28.58	14.29	63.6	—	63.6	—	36.5	6.4	47.8	53.0	5,380	37.1	3,770	30.7	3,120	9.82

● Dimensions of attachment

Chain No.	Pitch	A1, K1			SA1, SK1		Common dimensions		D		Approx. additional weight per attachment (kg)		
	P	C	Y	S	C_1	Y_1	B	O	I	L	A,SA	K,SK	D
DID 40TK	12.70	12.70	17.6	7.92	12.70	17.50	9.53	3.5	9.52	16.8	0.002	0.004	0.001
DID 50TK	15.875	15.88	23.0	10.31	15.88	22.60	12.70	5.2	11.91	21.0	0.003	0.006	0.002
DID 60TK	19.05	19.05	27.0	11.91	18.26	26.20	15.88	5.2	14.27	25.7	0.006	0.012	0.003
DID 80TK	25.40	25.40	34.9	15.88	24.61	34.05	19.05	6.8	19.05	33.9	0.011	0.022	0.007
DID100TK	31.75	31.75	43.3	19.84	31.75	42.75	25.40	8.7	23.83	41.9	0.024	0.048	0.012
DID120TK	38.10	38.10	53.2	23.02	36.51	50.30	28.58	10.3	28.58	51.4	0.037	0.074	0.020
DID140TK	44.45	44.45	61.9	28.58	44.45	62.40	34.92	12.3	33.32	57.8	0.068	0.136	0.030
DID160TK	50.80	50.80	69.9	31.75	50.80	68.10	38.10	14.3	38.10	67.4	0.091	0.182	0.045

● Dimensions of wide attachment

Chain No.	Pitch	WA1, WA2, WK1, WK2			WSA1, WSA2, WSK1, WSK2		Common dimensions			Approx. additional weight per attachment (kg)	
	P	C	Y	S	C_1	Y_1	O	Bw	Pw	WA,WSA	WK,WSK
DID 40TK	12.70	12.70	17.6	7.92	12.70	17.5	4.5	23.0	9.5	0.003	0.006
DID 50TK	15.875	15.88	23.0	10.31	15.88	22.6	5.5	28.8	11.9	0.007	0.014
DID 60TK	19.05	19.05	27.0	11.91	18.26	26.2	6.6	34.6	14.3	0.012	0.024
DID 80TK	25.40	25.40	34.9	15.88	24.61	34.1	9.0	46.1	19.1	0.026	0.052
DID100TK	31.75	31.75	43.3	19.84	31.75	42.8	11.0	57.8	23.8	0.051	0.102

Note: The values of the Avg. tensile strength and Max. allowable load are for chain bodies (attachments aren't included).

Conveyor Chain with Standard Attachments Series (Double Pitch)

	Standard Roller Chain	Wear Resistance Chain Series				
		X-Ring Chain (LX) O-Ring Chain (LD)	Fit X-Ring Chain (LF)	Sintered Bushing Roller Chain (UR), (URN)	Nickel Plate (N)	
Name						
Features		①DID X-Ring chain is the best value of maintenance-free chain available. ②The patented X-Ring design has half the friction of normal O-Ring chain and provides great sealing performance. It keeps the dirt out and the grease in much better than any other O-rings. ③Up to 2 times longer wear resistance performance compared to normal O-Ring chains. ④Great cost savings can be achieved through longer life and less down time.	①Strength is equivalent to existing X-Ring Chain/LX. ②Attachment can be designed using the same dimensions as JIS/ANSI standard. ③Standard JIS/ANSI sprockets can be used for even multiplex.	①Sintered alloy used for bushes ②Long life chain for low-speed and light load operation ③Wear life improved by 5 times of standard chains	①Specialized nickel coating ②Suitable for circum-stances requiring a clean impression and neat appearance ③Withstands salt breeze and acidic conditions	
Functions	Tensile strength index 100% Temperature Range in Use -10℃~80℃	Dirty Environment, Dusty, Maintenance-Free, Tensile strength index 100% Temperature Range in Use -10℃~120℃ ※ ※LX: Temp. -10°C~120°C, LD: Temp. -10°C~80°C	Dirty Environment, Dusty, Maintenance-Free, Tensile strength index 100% Temperature Range in Use -10℃~80℃	Maintenance-Free, Tensile strength index 70%, Temperature Range in Use -10℃~60℃	Corrosive Atmosphere, Moisture, Salt Water, Alkaline Environment Allowable Load 100%, Temperature Range in Use -10℃~80℃	
Main uses		FOOD, PACK, TEXTILE, PRINT, CONVEYOR, CANNING, CONST-RUCTION, HOME APPLIANCE, AGRICULTURE	FOOD, PACK, TEXTILE, PRINT, CONVEYOR, CANNING, CONST-RUCTION, HOME APPLIANCE, AGRICULTURE	FOOD, PACK, TEXTILE, PRINT, CONVEYOR, HOME APPLIANCE	TEXTILE, CONVEYOR※1, FOOD, CHEMICALS, PRINT, PARKING	

■ Conveyor Chain with Standard Attachments Series (Double Pitch): Chain No. and Codes

Chain No.	Standard	O-Ring/X-Ring	Sintered Bushing	Nickel Plating	Double Guard	Hi-Guard
DID C2040	○	LX/LF	UR,URN	N	WG	E
DID C2042	○	LX/LF	UR,URN	N	WG	E
DID C2050	○	LX/LF	UR,URN	N	WG	E
DID C2052	○	LX/LF	UR,URN	N	WG	E
DID C2060H	○	LX	UR,URN	N	WG	E
DID C2062H	○	LX	UR,URN	N	WG	E
DID C2080H	○	-	UR,URN	N	WG	E
DID C2082H	○	-	UR,URN	N	WG	E
DID C2100H	○	-	-	N	-	E
DID C2102H	○	-	-	N	-	E
DID C2120H	○	-	-	N	-	E
DID C2122H	○	-	-	N	-	E
DID C2160H	○	-	-	N	-	E
DID C2162H	○	-	-	N	-	E

Note: 1. Standard chains are available for those indicated with ○.
2. Although the ones marked with - aren't standard products, consult us.

Environment Resistance Chain Series

	Double Guard Chain (WG)	Hi-Guard Chain (E)	Stainless Steel Chain (SS)	Stainless Steel Chain (SSK)	Stainless Steel X-Ring Chain (SSLT)
Name	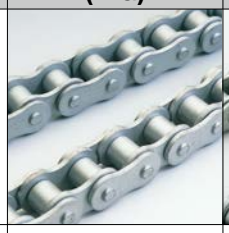				
Features	①Approx. twice more corrosion resistant compared to the High Guard Chain ②Suitable for circumstances with mild acidic or mild alkaline solutions ③Downsizing is possible compared to Stainless Steel Chains	①High corrosion resistance coating ②Suitable for circumstances both indoors and outdoors where long term resistance to rusting is required ③Excellent resistance to corrosion, salt and rusting	①18-8 stain ②Suitable for circumstances exposed to chemical agents, water and high temperature ③Best corrosion resistance and heat resistance	①Suitable for circumstances with chemical agents, water and/or high temperature ②1.5 times more tension allowance compared to SS type	①Superb wear resistance ②Outstanding cost performance ③Significant reduction in friction-loss
Functions	Corrosive Atmosphere, Moisture, Salt Water, Alkaline Environment, Acidic Environment, Allowable Load 100%, Temperature Range in Use -10℃~80℃	Corrosive Atmosphere, Moisture, Salt Water, Allowable Load 100%, Temperature Range in Use -10℃~80℃	Corrosive Atmosphere, Moisture, Salt Water, Alkaline Environment, Acidic Environment, Clean Areas, Temperature Range in Use -10℃~400℃, Allowable Load 10%	Allowable Load 15%	Corrosive Atmosphere, Moisture, Salt Water, Alkaline Environment, Acidic Environment, Dirty Environment, Dusty, Maintenance-Free, Great Savings, Temperature Range in Use -10℃~200℃, Allowable Load 10%, Clean Areas
Main uses	TEXTILE, CONVEYOR, PARKING, WATER TREATMENT※2, OUTDOOR, CONST-RUCTION, FOOD※2, CHEMICALS※2	TEXTILE, CONVEYOR, PARKING, WATER TREATMENT, OUTDOOR, CONST-RUCTION	CONVEYOR, FOOD, CHEMICALS, WATER TREATMENT		CONVEYOR, FOOD, CHEMICALS, WATER TREATMENT

※1. Consult us when using the chain for hanging.
※2. Consult us before using.

Stainless Steel		Stainless Steel X-Ring Chain
SS	SSK	SSLT
SS	SSK	-
SS	SSK	SSLT
SS	SSK	-
SS	SSK	SSLT
SS	SSK	-
-	-	SSLT
-	-	-
-	-	-
-	-	-
-	-	-
-	-	-
-	-	-
-	-	-

Double pitch chain

In general, conveyor chains are operated for longer distances and at lower speeds than transmission chains. Accordingly, even though the pins, bushings and rollers are left unchanged, and the plate pitch is doubled to reduce the number of sprocket teeth engaged with the chain to half, the wear of pins, bushings and rollers is small since the chain speed is low. DID Double Pitch Chains, conform to ANSI standard and "Ultimate Life Chain Series" and "Environment Resistant Chain Series", as are single pitch chains are also available. For information for sprokets, see "Sprockets for double pitch chains" on P.170.



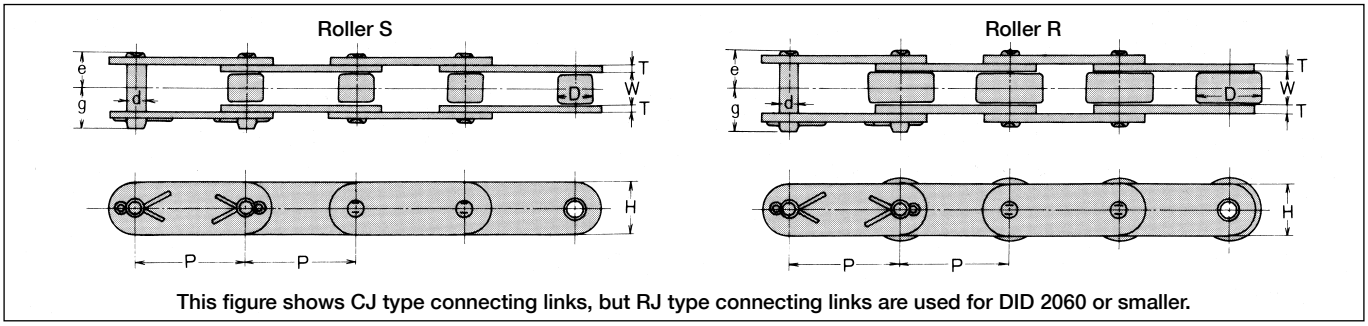

This figure shows CJ type connecting links, but RJ type connecting links are used for DID 2060 or smaller.

Double pitch chain with plastic rollers

This is a DID Double Pitch Chain with R Roller made of plastic, which generates less noise and lighter weight compared with steel rollers. Thus, the chain is suitable for a conveyor system designed to operate quietly and convey light-weight articles.

Since the components other than rollers are made of steel, the average tensile strength of a plastic roller chain is the same as that of a steel roller chain. However, the "maximum allowable load" of the chain should be kept lower, as shown in the following table, to prevent damage to the plastic rollers by the pressure from the engagement with sprockets.

The "Allowable load of plastic rollers" refers to the allowable load acting when conveyed articles press the plastic rollers traveling on the floor surface such as guid rails.

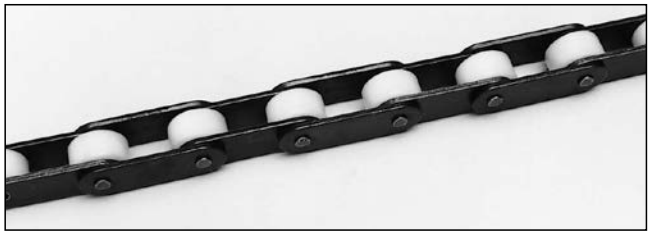

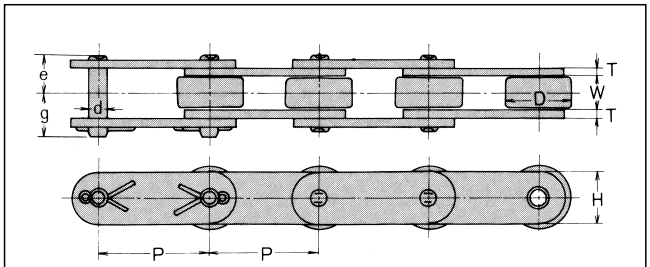

This figure shows a CJ type connecting link but R connecting links RJ type are used for DID 2060 or smaller.

Chain No.	Roller material	Specification of chain components excluding rollers	Max. allowable load		Max. allowable load of resin roller		Weight (kg／m)	Allowable operational temperature
			kN	kgf	kN	kgf		
DID C2042	Plastic	3 variations are available. ● Standard steel ● Rustless type (nickel plated) ● Stainless steel	0.44	45	0.19	20	0.51	−10℃ ~80℃
DID C2052			0.68	70	0.29	30	0.85	
DID C2062H			1.03	105	0.49	50	1.46	
DID C2082H			1.76	180	0.88	90	2.58	

Note: Ask us for the delivery time.

Large roller (R) and small rollers (S)

Since double pitch chains are frequently used for conveying products on a horizontal floor, chains designed for this purpose have increased roller diameter equal to that of single pitch chains of the same pitch for increased load capacity and lower traveling resistance. These rollers with larger outer diameter are called "large rollers", and the regular rollers are called "small rollers".
In this catalog, large rollers are expressed as R Roller, and small rollers as S Roller.

Designation of double pitch chains

A double pitch chain is designated, as in the following example, based on the nominal number of the single pitch chain it is based on.

[Type indication]

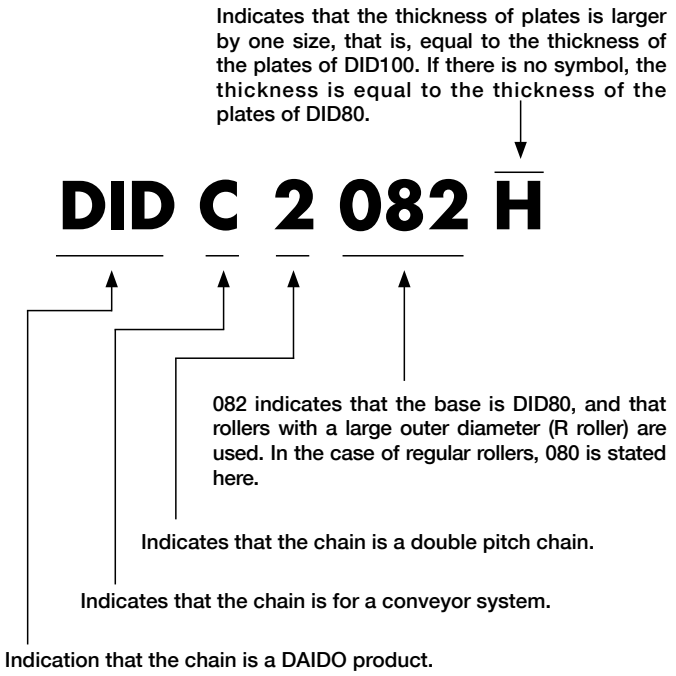

Cautions for selection and use

Cautions are described in "Calculation of Chain Tension".
See P.206.

Connecting links

For the connecting links of double pitch chains of all sizes, the connecting plates and connecting pins are clearance-fitted. For DIDC2060H or smaller, the spring clip type (RJ type connecting link) is standard. For DIDC2080H or larger, the cotter type (CJ type connecting link) is standard. Connecting links with an attachment, top roller or side roller are also available.

Sprockets for Double Pitch Chain

Sprockets for double pitch chains are different from sprockets of single pitch chains.
Therefore, use the sprockets shown on P.171. However, since chains are to some extent unaffected by difference in the engagement with sprockets, the sprockets of single pitch chains may be used for double pitch chains with larger number of teeth. Recommended sprockets are outlined below.

	Number of teeth of double pitch sprocket	Recommended sprocket
Small roller (Roller S)	9 or less	Avoid using a sprocket with nine or fewer teeth if possible, since the noise is greater and the vibration shortens the life of the chain and equipment.
	9.5 to 14 (Example) For DIDC2050 chain If a sprocket with 13 operating teeth is necessary, adopt a DID50 hob for 26 teeth or preferably 27 teeth. From the table at the bottom left on P.173, Dp=4.1786×31.75 =132.67 (since 26 teeth mean 13 operating teeth), or PCD=4.3362×31.75 =137.67 (since 27 teeth mean 13.5 operating teeth). (In the above formulas, 31.75 is the chain pitch of DIDC2050.)	When the number of teeth is 9.5 to 14, use a hob for the base single pitch chain, and cut the sprocket teeth to achieve the Dp shown in the left table on P.173. Make the number of cut teeth double the intended operating teeth of the double pitch sprocket, or odd-numbered teeth larger than this by one. With odd-numbered teeth, the operating teeth alter with each revolution of the sprocket, enhancing sprocket durability. In general, the Dp of the sprocket for a double pitch chain obtained by teeth cut using a hob for a single pitch chain is larger than the Dp of the sprocket for a single pitch chain with the same number of teeth. When the number of teeth is in this range, do not use the sprocket for a single pitch chain. The wear life of the chain becomes about one half of a chain where a correct sprocket is used. (For example, if a double pitch chain is engaged with a single pitch sprocket with 22 teeth, it is equivalent to a chain elongated by about 1.0% from the beginning.)
	15 or more	When the number of teeth is 15 or more, the sprocket for a single pitch chain can be used practically without any problem. Of course, the number of teeth of the single pitch sprocket should be double the number of teeth of the double pitch sprocket. Preferably use odd-numbered teeth by adding one more.

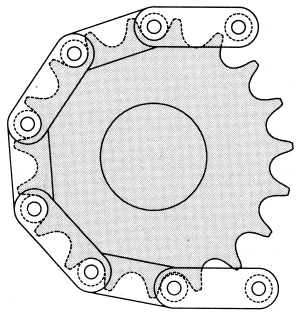

Roller S Double Pitch Chain

The above illustration shows a Roller S Double Pitch Chain engaged with a sprocket with 19 teeth for single pitch chain. The number of operating teeth for the double pitch chain is 9.5.

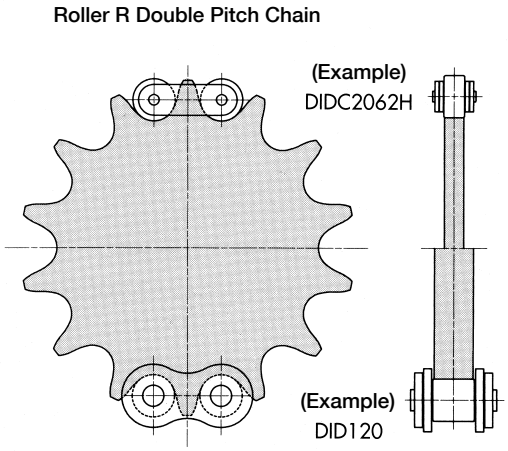

The above illustration shows a Roller R Double Pitch Chain and Standard Roller Chain with the same pitch engaged with a sprocket. It shows that the sprocket is different in thickness only. No single pitch chain sprocket is available for using differing chains. Consult us should you need such a sprocket.

Dimensions of Sprocket for Double Pitch Chain

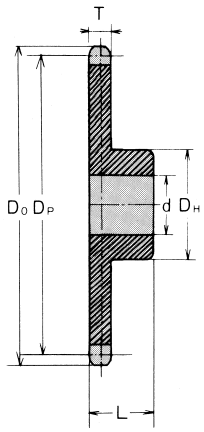

Transverse pitch

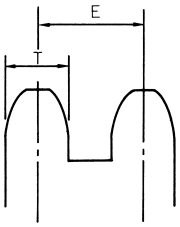

Roller S

Unit (mm)

Size	No. of teeth	Operating teeth	Pitch circle dia. Dp	Outer dia. Do	Tooth thickness T	Transverse pitch E	Shaft bore dia. d		Hub		Approx. weight (kg)	Material
							P dia.	Max dia.	Dia. DH	Length L		
DID C2040	19	9 1/2	78.23	84	7.0	14.4	14	32	54	22	0.58	Carbon Steel
DID C2050	19	9 1/2	97.78	105	8.4	18.1	15	40	65	28	1.00	
DID C2060H	19	9 1/2	117.34	126	11.3	26.2	17	45	70	40	1.80	
	21	10 1/2	129.26	138	11.3	26.2	17	50	80	40	2.25	
	23	11 1/2	141.22	150	11.3	26.2	17	50	80	40	2.50	
	25	12 1/2	153.20	162	11.3	26.2	17	50	80	40	2.75	
DID C2080H	19	9 1/2	156.45	167	14.1	32.6	22	60	90	40	3.40	
DID C2100H	19	9 1/2	195.58	209	17.0	39.1	26	75	107	50	6.10	

Note: 1. Tooth end is hardened.
2. P dia refers to prepared bore diameter.

Pitch circle diameter (Dp) is generally calculated by the following formula using the number of operating teeth (Z) that engage with a double pitch chain.

$Dp = Kp \times P$

Kp: Coefficient of pitch circle diameter
(refer to the table given below)
P: Nominal pitch of double pitch chain

Operating teeth Z	Coefficient of pitch circle dia. Kp	Operating teeth Z	Coefficient of pitch circle dia. Kp
5	1.7013	11	3.5495
5 1/2	1.8497	11 1/2	3.7065
6	2.0000	12	3.8637
6 1/2	2.1518	12 1/2	4.0211
7	2.3048	13	4.1786
7 1/2	2.4586	13 1/2	4.3362
8	2.6131	14	4.4940
8 1/2	2.7682	14 1/2	4.6518
9	2.9238		
9 1/2	3.0798		
10	3.2361		
10 1/2	3.3926		

Roller R

Unit (mm)

Size	No. of teeth	Operating teeth	Pitch circle dia. Dp	Outer dia. Do	Tooth thickness T	Transverse pitch E	Shaft bore dia. d		Hub		Approx. weight (kg)	Material
							P dia.	Max dia.	Dia. DH	Length L		
DID C2042	10	10	82.20	93	7.0	14.4	15	34	56	25	0.63	Carbon Steel
	11	11	90.16	102	7.0	14.4	15	34	56	25	0.72	
	12	12	98.14	108	7.0	14.4	15	34	56	25	0.75	
	13	13	106.14	118	7.0	14.4	15	42	63	25	0.97	
	14	14	114.15	127	7.0	14.4	15	42	63	25	1.00	
	15	15	122.17	135	7.0	14.4	15	43	63	28	1.15	
	16	16	130.20	143	7.0	14.4	15	43	63	28	1.25	
	17	17	138.23	151	7.0	14.4	17	45	70	28	1.45	
	18	18	146.27	159	7.0	14.4	17	45	70	28	1.53	
	19	19	154.32	167	7.0	14.4	17	45	70	28	1.65	
	20	20	162.37	176	7.0	14.4	17	45	70	28	2.00	
DID C2052	10	10	102.75	116	8.4	18.1	17	45	70	28	1.30	
	11	11	112.70	127	8.4	18.1	17	45	70	28	1.32	
	12	12	122.67	138	8.4	18.1	17	45	70	28	1.45	
	13	13	132.67	148	8.4	18.1	17	45	70	28	1.55	
	14	14	142.68	158	8.4	18.1	17	45	70	28	1.80	
	15	15	152.71	168	8.4	18.1	17	45	70	28	1.90	
	16	16	162.74	179	8.4	18.1	17	45	70	28	2.15	
	17	17	172.79	189	8.4	18.1	20	50	85	35	2.50	
	18	18	182.84	199	8.4	18.1	20	55	90	40	3.00	
	19	19	192.90	209	8.4	18.1	20	55	90	40	3.20	
	20	20	202.96	220	8.4	18.1	20	55	90	40	3.40	
DID C2062H	10	10	123.30	140	11.3	26.2	17	50	80	45	2.40	
	11	11	135.24	153	11.3	26.2	17	50	80	45	2.60	
	12	12	147.21	165	11.3	26.2	17	50	80	45	2.80	
	13	13	159.20	177	11.3	26.2	21	50	85	45	3.00	
	14	14	171.22	190	11.3	26.2	21	50	85	45	3.70	
	15	15	183.25	202	11.3	26.2	21	50	85	45	3.80	
	16	16	195.29	214	11.3	26.2	21	50	85	50	4.00	
	17	17	207.35	227	11.3	26.2	23	55	90	55	4.90	
	18	18	219.41	239	11.3	26.2	23	55	90	55	5.30	
	19	19	231.48	251	11.3	26.2	23	55	90	55	5.60	
	20	20	243.55	263	11.3	26.2	23	55	90	55	6.00	
DID C2082H	11	11	180.31	204	14.6	32.6	25	75	107	45	4.80	
DID C2102H	11	11	225.39	254	17.6	39.1	30	80	117	56	7.90	

Note: 1. Teeth end is not hardened.
2. P dia refers to prepared bore diameter.
3. Ask us for the delivery time.

Standard Attachments

For DID Small Conveyor Chain, various links are available for coupling and attaching custom devices directly to the chains. These links are called attachments. The following standard attachments are available.

Types and names of standard attachments

DID Standard Attachments include five kinds for single pitch chains and five kinds for double pitch chains as illustrated below. Standard attachments for respective chain sizes are listed on the following page.

Nominal number of attachment

(Example) DID C2060H — 4 P A 1

- DID C2060H: Chain size
- 4 P: Attachment intervals
- A: Types of attachments
- 1: Number of holes

The above indicates that a DID2060H chain has an A Attachment with one hole for every four links.

A (Bent attachment on one side)

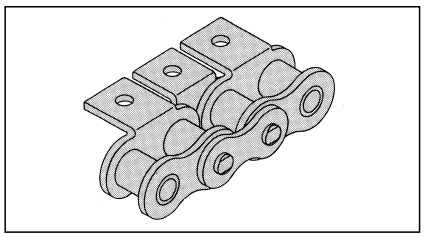

SA (Straight attachment on one side)

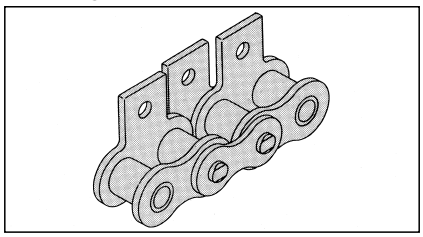

D (Extended pin)

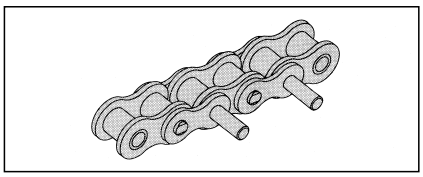

Above figure shows D1 (an extended pin set on every two links)

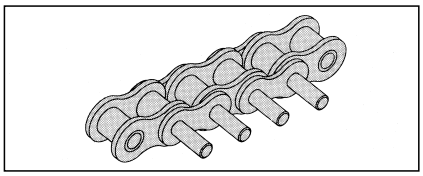

Above figure shows D3 (an extended pin set on every link)

Ref : D pin with a particular length is called "Attachment LP" (abbreviation of Long Pin)

K (Bent attachment on each side)

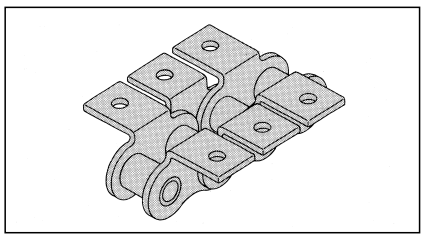

SK (Straight attachment on each side)

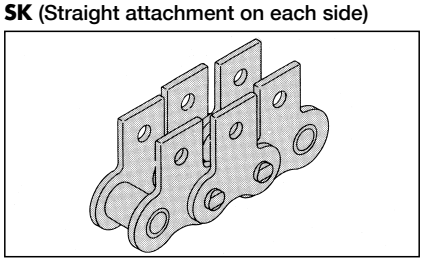

Examples of standard attachments

Installation of a U slot with **SK1**

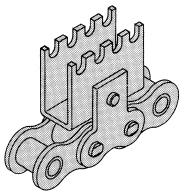

Installation of a dog with **SK1**

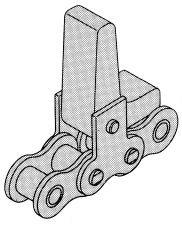

Installation of a pin with **K1**

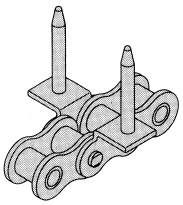

Installation of a bucket with **K1**

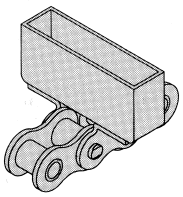

Installation of a bucket with **K1**

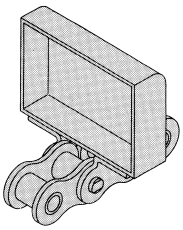

Installation of a strut with **K1**

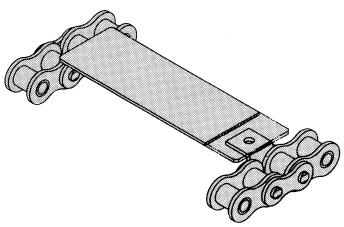

Conveyance of a long article by two strands of **SA1**

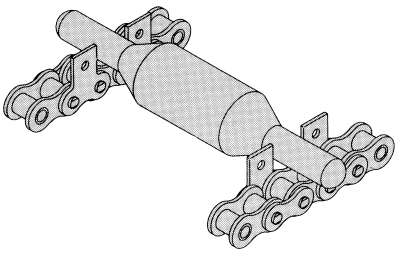

Installation of an L fitting with **D3**

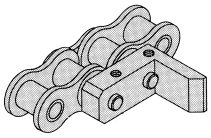

Installation of a dog with **D1**

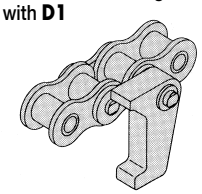

Standard Roller Chain Attachment

○ : Stock product
△ : Made-to-order

			DID standard attachment									
			Standard attachment									
			One-side bent		Both sides bent		One side straight		Both sides straight		Extended pin	
			A1	A2	K1	K2	SA1	SA2	SK1	SK2	D1	D3
Double pitch	Roller S	DID C2040	△	○	△	○	△	△	△	△	△	△
		DID C2050	△	○	△	○	△	△	△	△	△	△
		DID C2060H	△	○	△	○	△	△	△	△	△	△
		DID C2080H	△	○	△	○	△	△	△	△	△	△
		DID C2100H	△	△	△	△	△	△	△	△	△	△
		DID C2120H	△	△	△	△	△	△	△	△	△	△
		DID C2160H	△	△	△	△	△	△	△	△	△	△
	Roller R	DID C2042	△	△	△	△	△	△	△	△	△	△
		DID C2052	△	△	△	△	△	△	△	△	△	△
		DID C2062H	△	△	△	△	△	△	△	△	△	△
		DID C2082H	△	△	△	△	△	△	△	△	△	△
		DID C2102H	△	△	△	△	△	△	△	△	△	△
		DID C2122H	△	△	△	△	△	△	△	△	△	△
		DID C2162H	△	△	△	△	△	△	△	△	△	△

Indication of specially arranged chains with attachments

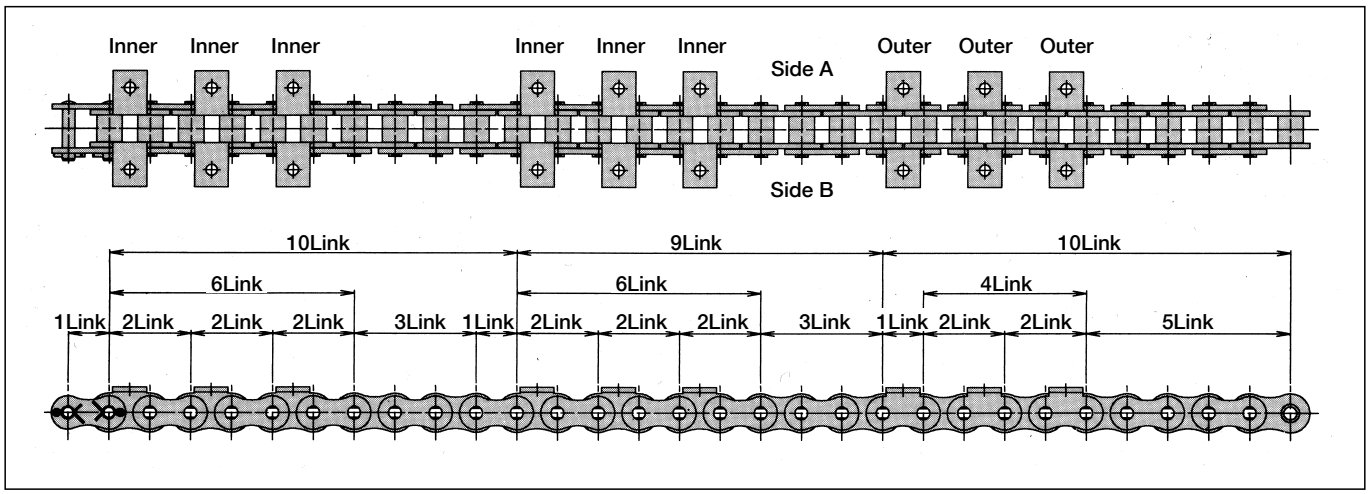

A specially arranged chain with K1, as in the above illustration, is indicated as follows:

CJ+(K1 inner+PL)×3+3LL+PL+(K1 inner+PL)×3+3LL+K1 outer+(RL+K1 outer)×2+5LL

"CJ" stands for a C connecting link; "K1 inner", an inner link Attachment K1; "PL", an outer link; "3LL", three links from an inner link to an inner link; "K1 outer", an outer link Attachment K1; and "RL", an inner link.
A "+" sign means "connect", and an × sign means "repeat". (For one-side attachments such as Attachment A and Attachment SA, the position of attachment plates is on side A in the above illustration.)

Consult us for other styles not mentioned here.
Note: When attaching attachments to every even-number link, they are attached to outer links, unless specified.

Chain

S Roller

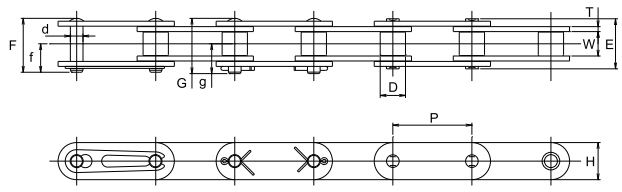

RJ (#2060 or smaller) CJ (#2080 or larger)

R Roller

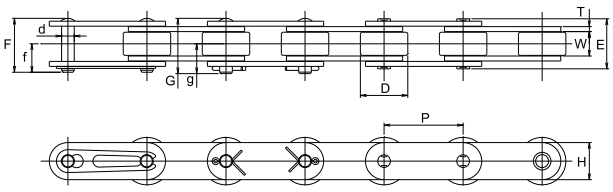

RJ (#2062 or smaller) CJ (#2082 or larger)

Attachment

A

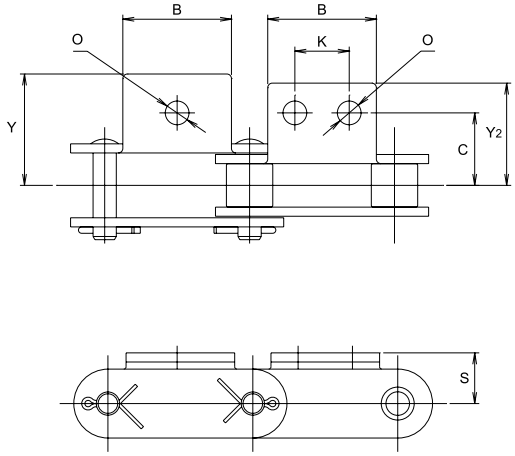

K

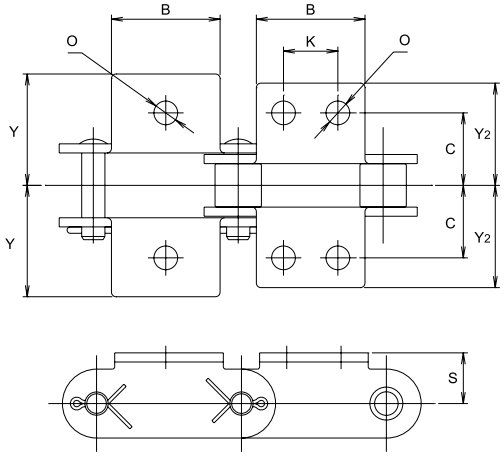

SA

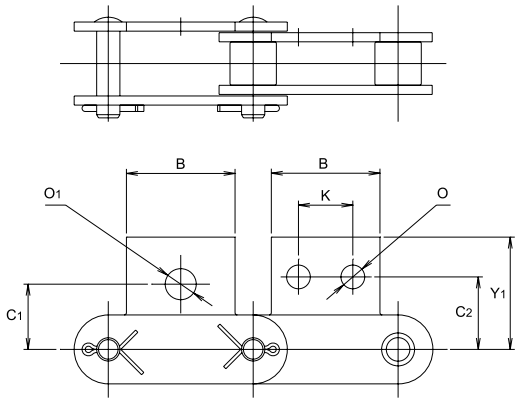

SK

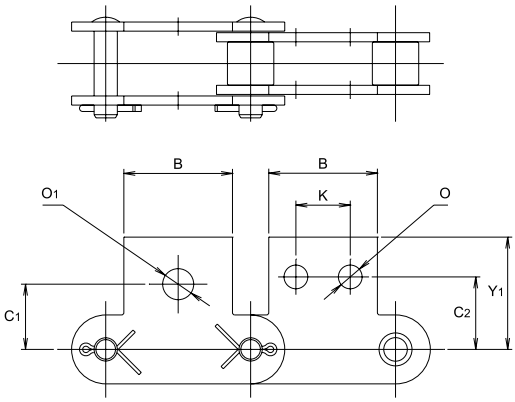

This figure shows CJ type connecting links but RJ type connecting links are used for #2060 or smaller.

Dimensions of Standard Roller Chain (Double pitch)

● Dimensions of Chain

Unit (mm)

Chain No.	Pitch P	Roller link width W	Roller (bush) dia. D	Pin						Plate		Avg. tensile strength		Max. allowable load		Approx. weight without attachments (kg/m)
				d	E	F	G	f	g	T	H	kN	kgf	kN	kgf	
DID C2040 **DID C2042**	25.40	7.95	7.92 15.88	3.97	16.5	17.6	—	9.5	—	1.5	11.7	17.0	1,740	2.64	270	0.49 0.86
DID C2050 **DID C2052**	31.75	9.53	10.16 19.05	5.09	20.3	21.9	—	11.6	—	2.0	15.1	28.7	2,930	4.4	450	0.84 1.32
DID C2060H **DID C2062H**	38.10	12.70	11.91 22.23	5.96	28.7	30.1	—	15.8	—	3.2	17.2	40.2	4,100	6.47	660	1.45 2.17
DID C2080H **DID C2082H**	50.80	15.88	15.88 28.58	7.94	35.9	—	38.7	—	20.6	4.0	23.3	68.6	7,000	11.2	1,150	2.46 3.53
DID C2100H **DID C2102H**	63.50	19.05	19.05 39.68	9.54	42.7	—	45.8	—	24.4	4.8	28.8	112	11,500	18.6	1,900	3.60 5.81
DID C2120H **DID C2122H**	76.20	25.40	22.23 44.45	11.11	53.2	—	56.5	—	29.9	5.6	33.8	156	16,000	25.5	2,600	5.09 8.09
DID C2160H **DID C2162H**	101.60	31.75	28.58 57.15	14.29	67.0	—	71.6	—	38.2	7.1	47.4	259	26,500	42.1	4,300	8.91 13.60

Note: The values of the avg. tensile strength and max. allowable load are for the chains (attachments aren't included).

● Dimensions of attachment

Chain No.	Pitch P	A, K				SA, SK				Common dimensions			Approx. additional weight per attachment (kg)	
		C	Y	Y_2	S	C_1	C_2	Y_1	O_1	K	B	O	A,SA	K,SK
DID C2040 **DID C2042**	25.40	12.70	19.4	19.4	9.13	11.11	13.50	19.8	5.2	9.53	19.1	3.5	0.003	0.006
DID C2050 **DID C2052**	31.75	15.88	24.4	24.4	11.11	14.29	15.88	24.6	6.8	11.91	23.8	5.2	0.006	0.012
DID C2060H **DID C2062H**	38.10	21.43	33.3	33.3	14.68	17.46	19.05	30.6	8.7	14.29	28.6	5.2	0.016	0.032
DID C2080H **DID C2082H**	50.80	27.78	40.8	36.6	19.05	22.23	25.40	40.5	10.3	19.05	38.1	6.8	0.034	0.068
DID C2100H **DID C2102H**	63.50	33.34	51.6	46.6	23.42	28.58	31.75	50.4	14.3	23.81	47.6	8.7	0.064	0.128
DID C2120H **DID C2122H**	76.20	39.69	62.9	57.1	27.78	33.34	37.31	59.9	16.0	28.58	57.1	10.3	0.108	0.216
DID C2160H **DID C2162H**	101.60	52.39	79.0	71.6	36.51	44.45	50.80	78.6	22.0	38.10	76.2	14.3	0.246	0.492

Note: Attachments with one hole are indicated as SA1, SK1, A1, K1, and those with two holes are indicated as SA2, SK2, A2, K2.

Chain

S Roller

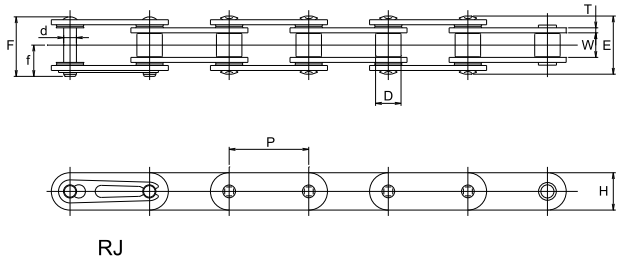

R Roller

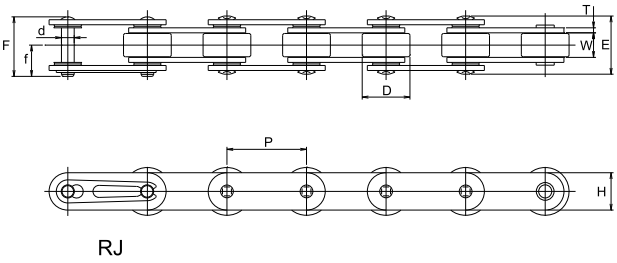

Attachment

A

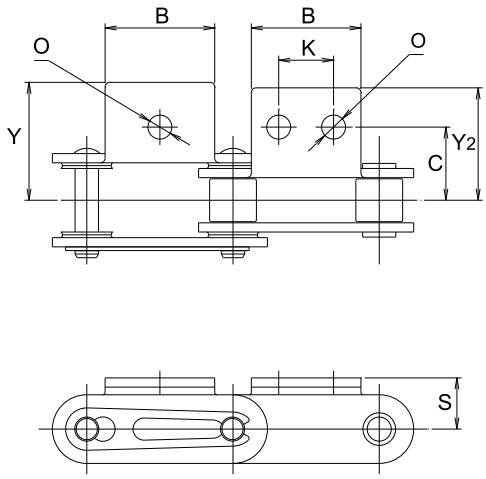

K

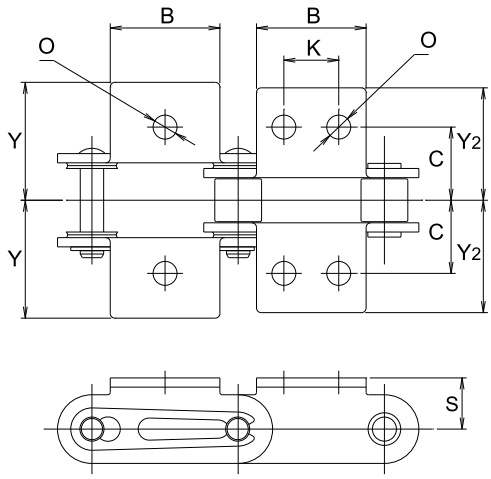

SA

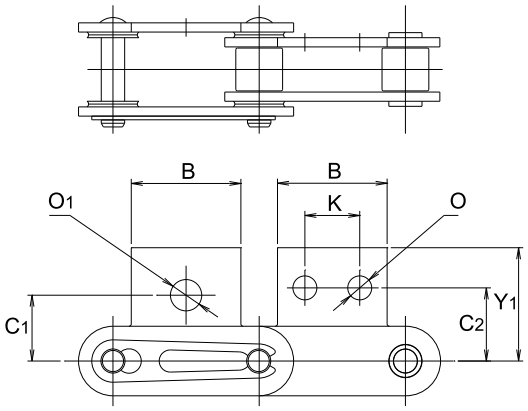

SK

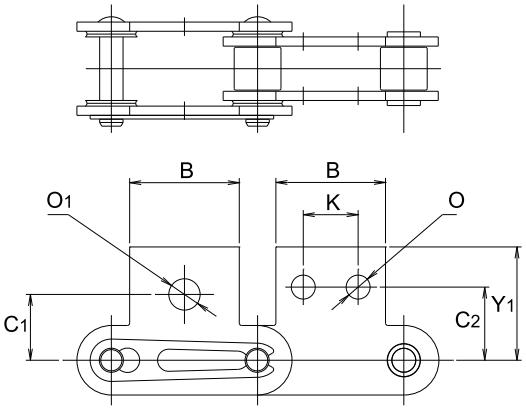

Dimensions of O-ring Chain (Double pitch)

● Dimensions of Chain

Unit (mm)

Chain No.		Pitch	Roller link width	Roller (bush) dia.	Pin				Plate		Avg. tensile strength		Max. allowable load		Approx. weight without attachments
Standard	Nickel plated	P	W	D	d	E	F	f	T	H	kN	kgf	kN	kgf	(kg/m)
DIDC2040LX	**DIDC2040LXN**	25.40	7.95	7.92	3.97	20.0	20.0	10.7	1.5	11.7	16.2	1,650	2.64	270	0.52
DIDC2042LX	**DIDC2042LXN**			15.88											0.89
DIDC2050LX	**DIDC2050LXN**	31.75	9.53	10.16	5.09	23.4	23.9	12.8	2.0	15.1	27.5	2,800	4.4	450	0.87
DIDC2052LX	**DIDC2052LXN**			19.05											1.35
DIDC2060HLX	**DIDC2060HLXN**	38.10	12.70	11.91	5.96	32.6	33.0	17.5	3.2	17.2	38.2	3,900	6.47	660	1.46
DIDC2062HLX	**DIDC2062HLXN**			22.23											2.18

Note: The values of the avg. tensile strength and max. allowable load are for the chains (attachments aren't included).

● Dimensions of attachment

Chain No.		Pitch	A, K			SA, SK				Common dimensions			Approx. additional weight per attachment (kg)	
Standard	Nickel plated	P	C	Y	S	Y_1	C_1	C_2	O_1	B	K	O	A,SA	K,SK
DIDC2040LX	**DIDC2040LXN**	25.40	12.70	20.6	9.13	19.8	11.11	13.50	5.2	19.1	9.53	3.5	0.003	0.006
DIDC2042LX	**DIDC2042LXN**													
DIDC2050LX	**DIDC2050LXN**	31.75	15.88	25.6	11.11	24.6	14.29	15.88	6.8	23.8	11.91	5.2	0.006	0.012
DIDC2052LX	**DIDC2052LXN**													
DIDC2060HLX	**DIDC2060HLXN**	38.10	21.43	34.7	14.68	30.6	17.46	19.05	8.7	28.6	14.29	5.2	0.016	0.032
DIDC2062HLX	**DIDC2062HLXN**													

● Dimensions of Chain

Unit (mm)

Chain No.		Pitch	Roller link width	Roller (bush) dia.	Pin				Plate		Avg. tensile strength		Max. allowable load		Approx. weight without attachments
Standard	Nickel plated	P	W	D	d	E	F	f	T	H	kN	kgf	kN	kgf	(kg/m)
DIDC2040LF	**DIDC2040LFN**	25.40	7.95	7.92	3.97	16.5	17.6	9.5	1.25	11.7	16.2	1,650	2.64	270	0.43
DIDC2042LF	**DIDC2042LFN**			15.88											0.8
DIDC2050LF	**DIDC2050LFN**	31.75	9.53	10.16	5.09	20.3	21.9	11.6	1.5	15.1	27.5	2,800	4.4	450	0.7
DIDC2052LF	**DIDC2052LFN**			19.05											1.18

● Dimensions of attachment

Chain No.		Pitch	A, K			SA, SK				Common dimensions			Approx. additional weight per attachment (kg)	
Standard	Nickel plated	P	C	Y	S	Y_1	C_1	C_2	O_1	B	K	O	A,SA	K,SK
DIDC2040LF	**DIDC2040LFN**	25.40	12.70	19.4	9.13	19.8	11.11	13.50	5.2	19.1	9.53	3.5	0.003	0.006
DIDC2042LF	**DIDC2042LFN**													
DIDC2050LF	**DIDC2050LFN**	31.75	15.88	24.4	11.11	24.6	14.29	15.88	6.8	23.8	11.91	5.2	0.006	0.012
DIDC2052LF	**DIDC2052LFN**													

Chain

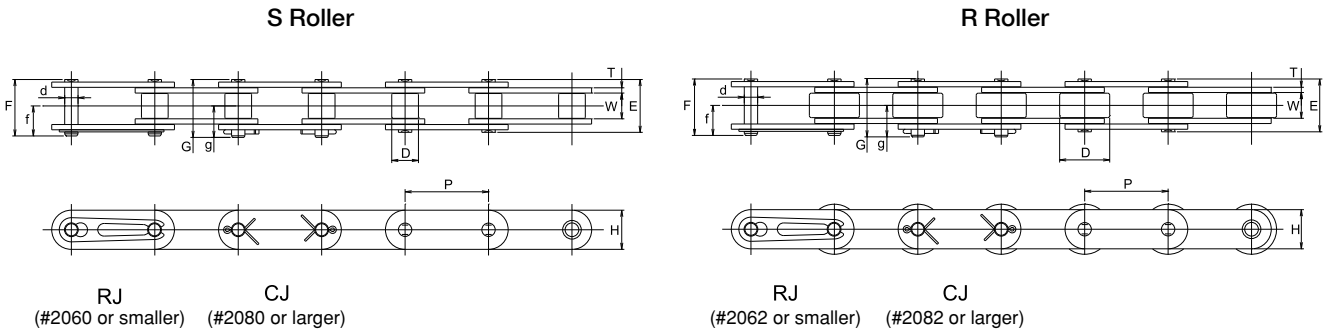

Attachment

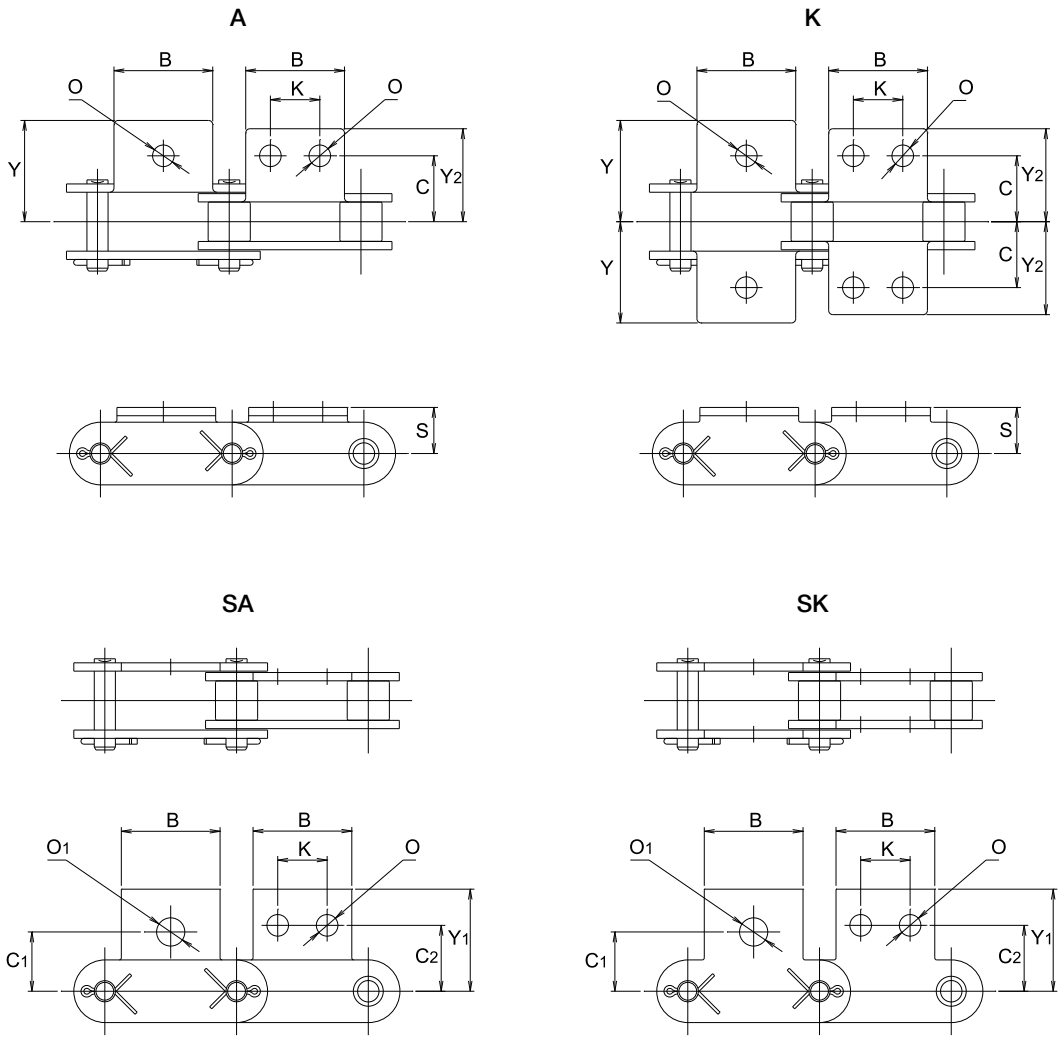

This figure shows CJ type connecting links but RJ type connecting links are used for #2060 or smaller.

Dimensions of Sintered Bushing Roller Chain (Double pitch)

● Dimensions of Chain

Unit (mm)

Chain No.		Pitch	Roller link width	Roller (bush) dia.	Pin						Plate		Avg. tensile strength		Max. allowable load		Approx. weight without attachments
Standard	Rustless	P	W	D	d	E	F	G	f	g	T	H	kN	kgf	kN	kgf	(kg/m)
DIDC2040UR	**DIDC2040URN**	25.40	7.95	7.92	3.97	16.5	17.6	—	9.5	—	1.5	11.7	15.7	1,590	2.64	270	0.49
DIDC2042UR	**DIDC2042URN**			15.88													0.86
DIDC2050UR	**DIDC2050URN**	31.75	9.53	10.16	5.09	20.3	21.9	—	11.6	—	2.0	15.1	25.5	2,590	4.31	440	0.84
DIDC2052UR	**DIDC2052URN**			19.05													1.32
DIDC2060HUR	**DIDC2060HURN**	38.10	12.70	11.91	5.96	28.7	30.1	—	15.8	—	3.2	17.2	37.3	3,790	6.27	640	1.45
DIDC2062HUR	**DIDC2062HURN**			22.23													2.17
DIDC2080HUR	**DIDC2080HURN**	50.80	15.88	15.88	7.94	35.9	—	38.7	—	20.6	4.0	23.3	68.6	6,960	10.7	1,090	2.46
DIDC2082HUR	**DIDC2082HURN**			28.58													3.53

Note: The values of the avg. tensile strength and max. allowable load are for the chains (attachments aren't included).

● Dimensions of attachment

Chain No.		Pitch	A, K				SA, SK				Common dimensions			Approx. additional weight per attachment (kg)	
Standard	Rustless	P	C	Y	Y_2	S	C_1	C_2	Y_1	O_1	K	B	O	A,SA	K,SK
DIDC2040UR	**DIDC2040URN**	25.40	12.70	19.4	19.4	9.13	11.11	13.50	19.8	5.2	9.53	19.1	3.5	0.003	0.006
DIDC2042UR	**DIDC2042URN**														
DIDC2050UR	**DIDC2050URN**	31.75	15.88	24.4	24.4	11.11	14.29	15.88	24.6	6.8	11.91	23.8	5.2	0.006	0.012
DIDC2052UR	**DIDC2052URN**														
DIDC2060HUR	**DIDC2060HURN**	38.10	21.43	33.3	33.3	14.68	17.46	19.05	30.6	8.7	14.29	28.6	5.2	0.016	0.032
DIDC2062HUR	**DIDC2062HURN**														
DIDC2080HUR	**DIDC2080HURN**	50.80	27.78	40.8	36.6	19.05	22.23	25.40	40.5	10.3	19.05	38.1	6.8	0.034	0.068
DIDC2082HUR	**DIDC2082HURN**														

Chain

S Roller

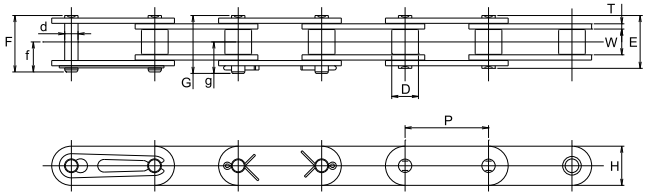

RJ (#2060 or smaller) CJ (#2080 or larger)

R Roller

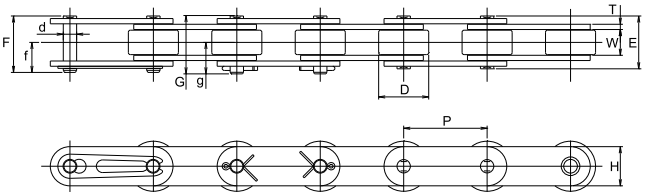

RJ (#2062 or smaller) CJ (#2082 or larger)

Attachment

A

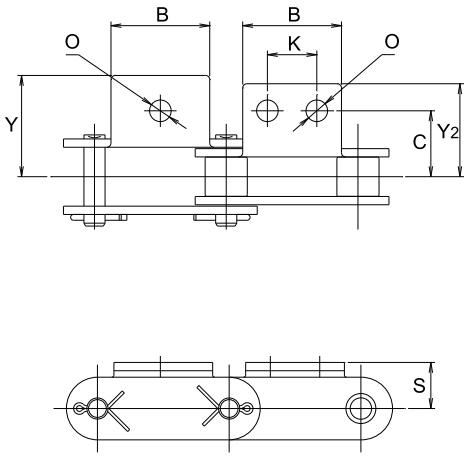

K

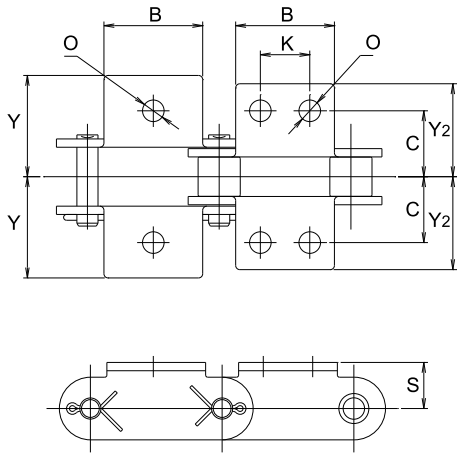

SA

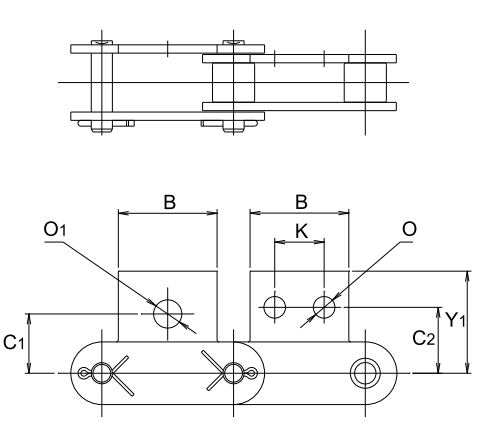

SK

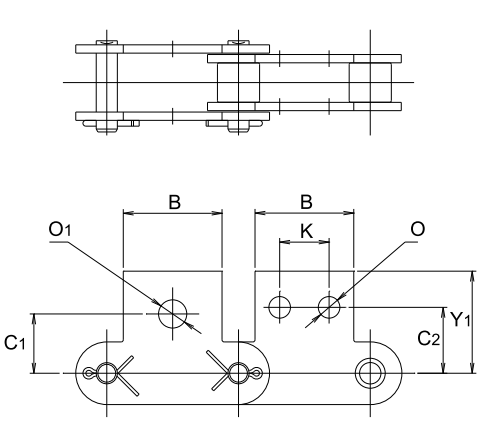

This figure shows CJ type connecting links but RJ type connecting links are used for #2060 or smaller.

Dimensions of Nickel Plated Chain (Double pitch)

● Dimensions of Chain

Unit (mm)

Chain No.	Pitch	Roller link width	Roller (bush) dia.	Pin						Plate		Avg. tensile strength		Max. allowable load		Approx. weight without attachments
	P	W	D	d	E	F	G	f	g	T	H	kN	kgf	kN	kgf	(kg/m)
DID C2040N	25.40	7.95	7.92	3.97	16.5	17.6	—	9.5	—	1.5	11.7	17.0	1,740	2.64	270	0.49
DID C2042N			15.88													0.86
DID C2050N	31.75	9.53	10.16	5.09	20.3	21.9	—	11.6	—	2.0	15.1	28.7	2,930	4.4	450	0.84
DID C2052N			19.05													1.32
DID C2060HN	38.10	12.70	11.91	5.96	28.7	30.1	—	15.8	—	3.2	17.2	40.2	4,100	6.47	660	1.45
DID C2062HN			22.23													2.17
DID C2080HN	50.80	15.88	15.88	7.94	35.9	—	38.7	—	20.6	4.0	23.3	68.6	7,000	11.2	1,150	2.46
DID C2082HN			28.58													3.53
DID C2100HN	63.50	19.05	19.05	9.54	42.7	—	45.8	—	24.4	4.8	28.8	112	11,500	18.6	1,900	3.60
DID C2102HN			39.68													5.81
DID C2120HN	76.20	25.40	22.23	11.11	53.2	—	56.5	—	29.9	5.6	33.8	156	16,000	25.5	2,600	5.09
DID C2122HN			44.45													8.09
DID C2160HN	101.60	31.75	28.58	14.29	67.0	—	71.6	—	38.2	7.1	47.4	259	26,500	42.1	4,300	8.91
DID C2162HN			57.15													13.60

Note: The values of the avg. tensile strength and max. allowable load are for the chains (attachments aren't included).

● Dimensions of attachment

Chain No.	Pitch	A, K				SA, SK				Common dimensions			Approx. additional weight per attachment (kg)	
	P	C	Y	Y_2	S	C_1	C_2	Y_1	O_1	K	B	O	A,SA	K,SK
DID C2040N	25.40	12.70	19.4	19.4	9.13	11.11	13.50	19.8	5.2	9.53	19.1	3.5	0.003	0.006
DID C2042N														
DID C2050N	31.75	15.88	24.4	24.4	11.11	14.29	15.88	24.6	6.8	11.91	23.8	5.2	0.006	0.012
DID C2052N														
DID C2060HN	38.10	21.43	33.3	33.3	14.68	17.46	19.05	30.6	8.7	14.29	28.6	5.2	0.016	0.032
DID C2062HN														
DID C2080HN	50.80	27.78	40.8	36.6	19.05	22.23	25.40	40.5	10.3	19.05	38.1	6.8	0.034	0.068
DID C2082HN														
DID C2100HN	63.50	33.34	51.6	46.6	23.42	28.58	31.75	50.4	14.3	23.81	47.6	8.7	0.064	0.128
DID C2102HN														
DID C2120HN	76.20	39.69	62.9	57.1	27.78	33.34	37.31	59.9	16.0	28.58	57.1	10.3	0.108	0.216
DID C2122HN														
DID C2160HN	101.60	52.39	79.0	71.6	36.51	44.45	50.80	78.6	22.0	38.10	76.2	14.3	0.246	0.492
DID C2162HN														

Note: 1. Attachments with one hole are indicated as SA1, SK1, A1, K1, and those with two holes are indicated as SA2, SK2, A2, K2.
2. Specify the intervals between the attachments when ordering.
3. Unless otherwise specified, the attachments are attached to the outer links of even numbers.

Chain

S Roller

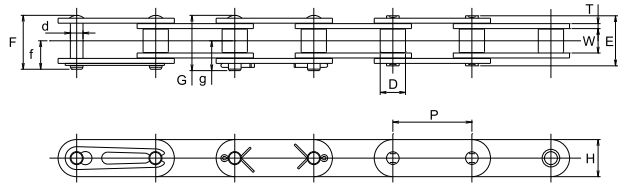

RJ (#2060 or smaller) CJ (#2080 or larger)

R Roller

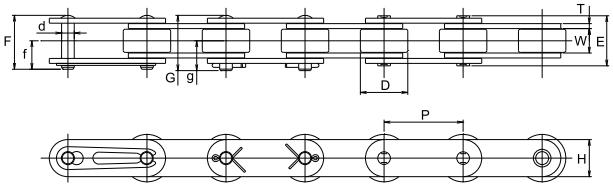

RJ (#2062 or smaller) CJ (#2082 or larger)

Attachment

A

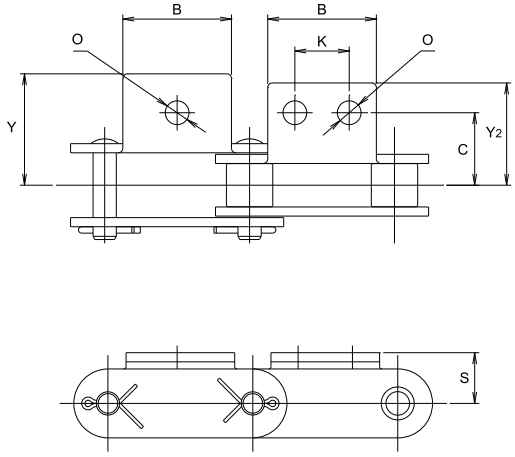

K

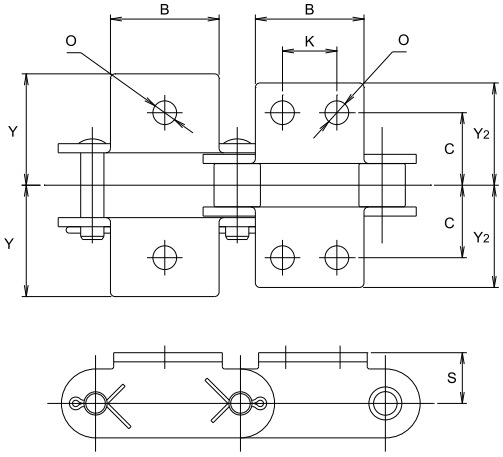

SA

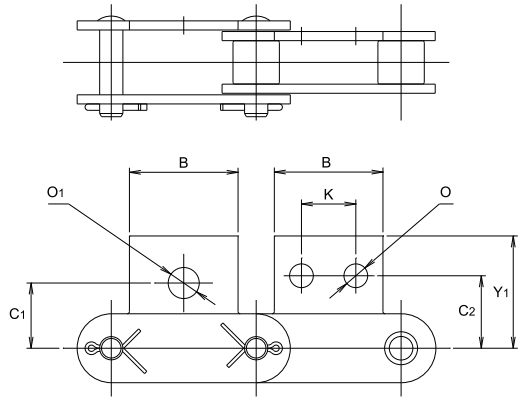

SK

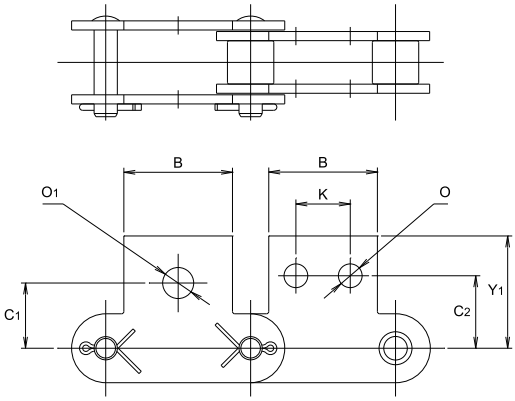

This figure shows CJ type connecting links but RJ type connecting links are used for #2060 or smaller.

Dimensions of High Guard Chain (Double pitch)

● Dimensions of Chain

Unit (mm)

Chain No.	Pitch	Roller link width	Roller (bush) dia.	Pin						Plate		Avg. tensile strength		Max. allowable load		Approx. weight without attachments
	P	W	D	d	E	F	G	f	g	T	H	kN	kgf	kN	kgf	(kg/m)
DID C2040E	25.40	7.95	7.92	3.97	16.5	17.6	—	9.5	—	1.5	11.7	17.0	1,740	2.64	270	0.49
DID C2042E			15.88													0.86
DID C2050E	31.75	9.53	10.16	5.09	20.3	21.9	—	11.6	—	2.0	15.1	28.7	2,930	4.4	450	0.84
DID C2052E			19.05													1.32
DID C2060HE	38.10	12.70	11.91	5.96	28.7	30.1	—	15.8	—	3.2	17.2	40.2	4,100	6.47	660	1.45
DID C2062HE			22.23													2.17
DID C2080HE	50.80	15.88	15.88	7.94	35.9	—	38.7	—	20.6	4.0	23.3	68.6	7,000	11.2	1,150	2.46
DID C2082HE			28.58													3.53
DID C2100HE	63.50	19.05	19.05	9.54	42.7	—	45.8	—	24.4	4.8	28.8	112	11,500	18.6	1,900	3.60
DID C2102HE			39.68													5.81
DID C2120HE	76.20	25.40	22.23	11.11	53.2	—	56.5	—	29.9	5.6	33.8	156	16,000	25.5	2,600	5.09
DID C2122HE			44.45													8.09
DID C2160HE	101.60	31.75	28.58	14.29	67.0	—	71.6	—	38.2	7.1	47.4	259	26,500	42.1	4,300	8.91
DID C2162HE			57.15													13.60

Note: The values of the avg. tensile strength and max. allowable load are for the chains (attachments aren't included).

● Dimensions of attachment

Chain No.	Pitch	A, K				SA, SK				Common dimensions			Approx. additional weight per attachment (kg)	
	P	C	Y	Y_2	S	C_1	C_2	Y_1	O_1	K	B	O	A,SA	K,SK
DID C2040E	25.40	12.70	19.4	19.4	9.13	11.11	13.50	19.8	5.2	9.53	19.1	3.5	0.003	0.006
DID C2042E														
DID C2050E	31.75	15.88	24.4	24.4	11.11	14.29	15.88	24.6	6.8	11.91	23.8	5.2	0.006	0.012
DID C2052E														
DID C2060HE	38.10	21.43	33.3	33.3	14.68	17.46	19.05	30.6	8.7	14.29	28.6	5.2	0.016	0.032
DID C2062HE														
DID C2080HE	50.80	27.78	40.8	36.6	19.05	22.23	25.40	40.5	10.3	19.05	38.1	6.8	0.034	0.068
DID C2082HE														
DID C2100HE	63.50	33.34	51.6	46.6	23.42	28.58	31.75	50.4	14.3	23.81	47.6	8.7	0.064	0.128
DID C2102HE														
DID C2120HE	76.20	39.69	62.9	57.1	27.78	33.34	37.31	59.9	16.0	28.58	57.1	10.3	0.108	0.216
DID C2122HE														
DID C2160HE	101.60	52.39	79.0	71.6	36.51	44.45	50.80	78.6	22.0	38.10	76.2	14.3	0.246	0.492
DID C2162HE														

Note: 1. Attachments with one hole are indicated as SA1, SK1, A1, K1, and those with two holes are indicated as SA2, SK2, A2, K2.
2. Specify the intervals between the attachments when ordering.
3. Unless otherwise specified, the attachments are attached to the outer links of even numbers.

Chain

S Roller

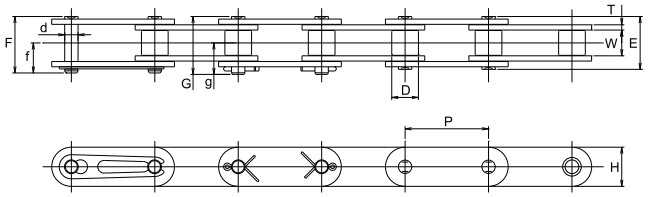

RJ (#2060 or smaller) CJ (#2080 or larger)

R Roller

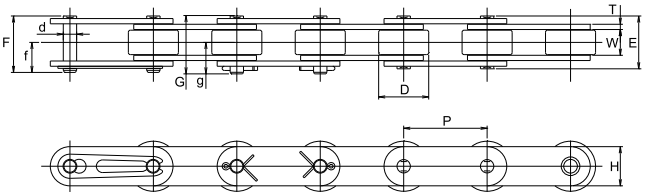

RJ (#2062 or smaller) CJ (#2082 or larger)

Attachment

A

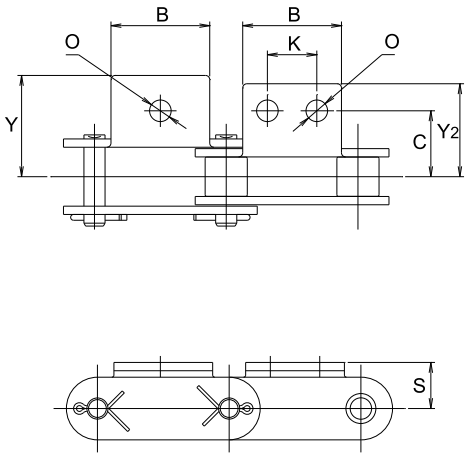

K

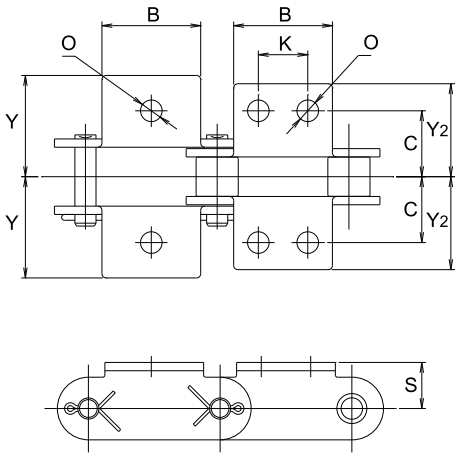

SA

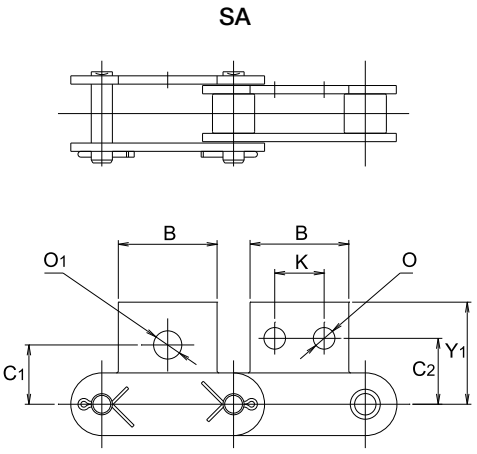

SK

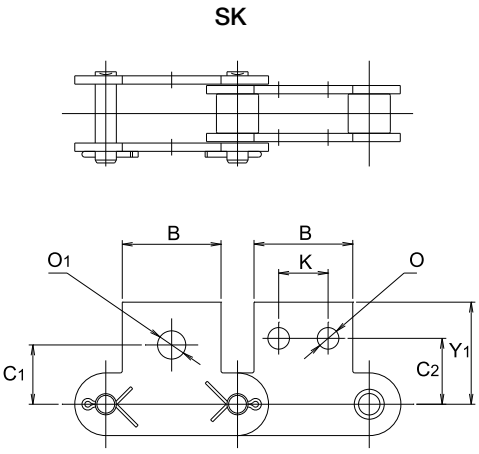

This figure shows CJ type connecting links but RJ type connecting links are used for #2060 or smaller.

Dimensions of Double Guard Chain (Double pitch)

● Dimensions of Chain

Unit (mm)

Chain No.	Pitch	Roller link width	Roller (bush) dia.	Pin						Plate		Avg. tensile strength		Max. allowable load		Approx. weight without attachments (kg/m)
	P	W	D	d	E	F	G	f	g	T	H	kN	kgf	kN	kgf	
DID C2040WG DID C2042WG	25.40	7.95	7.92 15.88	3.97	16.5	17.6	—	9.5	—	1.5	11.7	17.0	1,740	2.64	270	0.49 0.86
DID C2050WG DID C2052WG	31.75	9.53	10.16 19.05	5.09	20.3	21.9	—	11.6	—	2.0	15.1	28.7	2,930	4.4	450	0.84 1.32
DID C2060HWG DID C2062HWG	38.10	12.70	11.91 22.23	5.96	28.7	30.1	—	15.8	—	3.2	17.2	40.2	4,100	6.47	660	1.45 2.17
DID C2080HWG DID C2082HWG	50.80	15.88	15.88 28.58	7.94	35.9	—	38.7	—	20.6	4.0	23.3	68.6	7,000	11.2	1,150	2.46 3.53

Note: 1. The values of the Avg. tensile strength and max. allowable load are for the chains (attachments aren't included).
2. Consult us for the sizes other than the above.

● Dimensions of attachment

Chain No.	Pitch	A, K				SA, SK				Common dimensions			Approx. additional weight per attachment (kg)	
	P	C	Y	Y_2	S	C_1	C_2	Y_1	O_1	K	B	O	A,SA	K,SK
DID C2040WG DID C2042WG	25.40	12.70	19.4	19.4	9.13	11.11	13.50	19.8	5.2	9.53	19.1	3.5	0.003	0.006
DID C2050WG DID C2052WG	31.75	15.88	24.4	24.4	11.11	14.29	15.88	24.6	6.8	11.91	23.8	5.2	0.006	0.012
DID C2060HWG DID C2062HWG	38.10	21.43	33.3	33.3	14.68	17.46	19.05	30.6	8.7	14.29	28.6	5.2	0.016	0.032
DID C2080HWG DID C2082HWG	50.80	27.78	40.8	36.6	19.05	22.23	25.40	40.5	10.3	19.05	38.1	6.8	0.034	0.068

Note: 1. Attachments with one hole are indicated as SA1, SK1, A1, K1, and those with two holes are indicated as SA2, SK2, A2, K2.
2. Specify the intervals between the attachments when ordering.
3. Unless otherwise specified, the attachments are attached to the outer links of even numbers.

Chain

S Roller

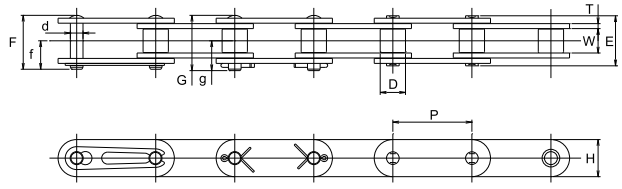

RJ (#2060 or smaller) CJ (#2080 or larger)

R Roller

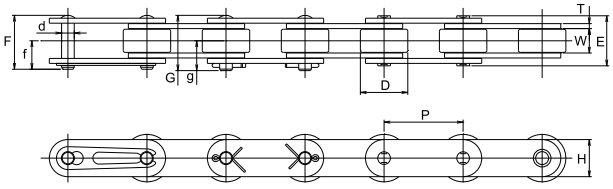

RJ (#2062 or smaller) CJ (#2082 or larger)

Attachment

A

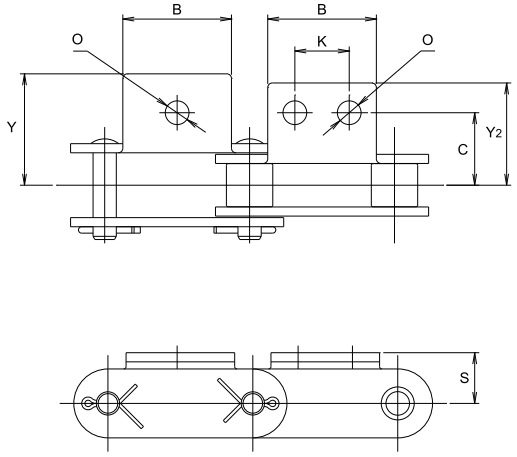

K

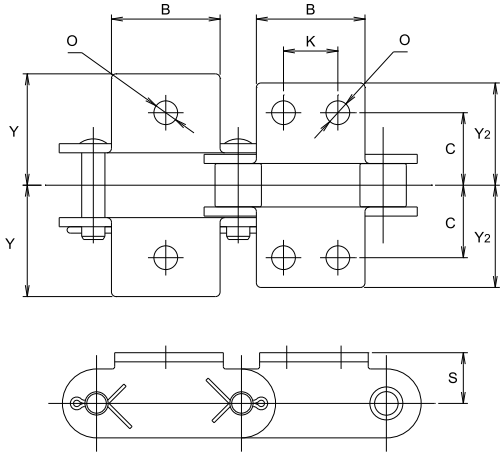

SA

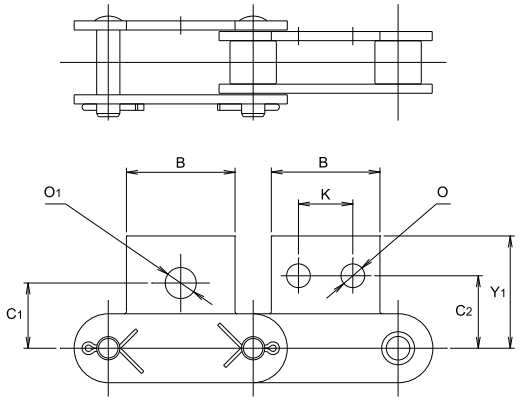

SK

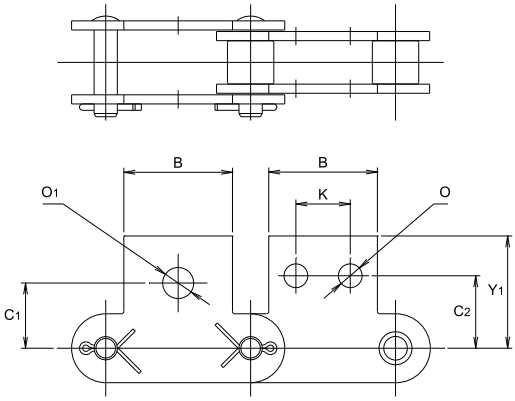

This figure shows CJ type connecting links but RJ type connecting links are used for #2060 or smaller.

Dimensions of Stainless Steel Chain (Double pitch)

● Dimensions of Chain

Unit (mm)

Chain No.	Pitch P	Roller link width W	Roller (bush) dia. D	Pin						Plate		Avg. tensile strength		Max. allowable load				Approx. weight without attachments (kg/m)
				d	E	F	G	f	g	T	H	kN	kgf	SS kN	SS kgf	SSK kN	SSK kgf	
DID C2040SS,SSK DID C2042SS,SSK	25.40	7.95	7.92 15.88	3.97	16.15	17.65	18.35	9.58	10.28	1.5	11.7	13.3	1,350	0.44	40	0.68	70	0.49 0.83
DID C2050SS,SSK DID C2052SS,SSK	31.75	9.53	10.16 19.05	5.09	20.40	21.80	22.30	11.60	12.15	2.0	14.6	20.9	2,120	0.69	70	1.03	100	0.83 1.28
DID C2060HSS,SSK DID C2062HSS,SSK	38.10	12.70	11.91 22.23	5.96	28.70	30.20	31.40	15.85	17.05	3.2	17.5	30.0	3,050	1.03	100	1.57	160	1.46 2.14
DID C2080HSS,SSK DID C2082HSS,SSK	50.80	15.88	15.88 28.58	7.94	35.60	—	38.70	—	20.90	4.0	23.0	53.4	5,420	1.77	180	2.65	270	2.44 3.50

Note: The values of the avg. tensile strength and max. allowable load are for the chains (attachments aren't included).

● Dimensions of attachment

Chain No.	Pitch P	A, K				SA, SK				Common dimensions			Approx. additional weight per attachment (kg)	
		C	Y	Y_2	S	C_1	C_2	Y_1	O_1	K	B	O	A,SA	K,SK
DID C2040SS,SSK DID C2042SS,SSK	25.40	12.70	19.0	17.4	9.1	11.11	13.5	19.75	5.2	9.53	19.1	3.6	0.003	0.006
DID C2050SS,SSK DID C2052SS,SSK	31.75	15.88	24.0	21.9	11.1	14.3	15.9	24.55	6.8	11.91	23.8	5.2	0.007	0.014
DID C2060HSS,SSK DID C2062HSS,SSK	38.10	21.43	31.8	28.4	14.7	17.5	19.1	31.05	8.7	14.30	28.6	5.2	0.016	0.032
DID C2080HSS,SSK DID C2082HSS,SSK	50.80	27.78	41.1	37.0	19.1	22.2	25.4	40.80	10.3	19.05	38.1	6.8	0.033	0.066

Note: 1. Attachments with one hole are indicated as SA1, SK1, A1, K1, and those with two holes are indicated as SA2, SK2, A2, K2.
2. Specify the intervals between the attachments when ordering.
3. Unless otherwise specified, the attachments are attached to the outer links of even numbers.

Chain

S Roller

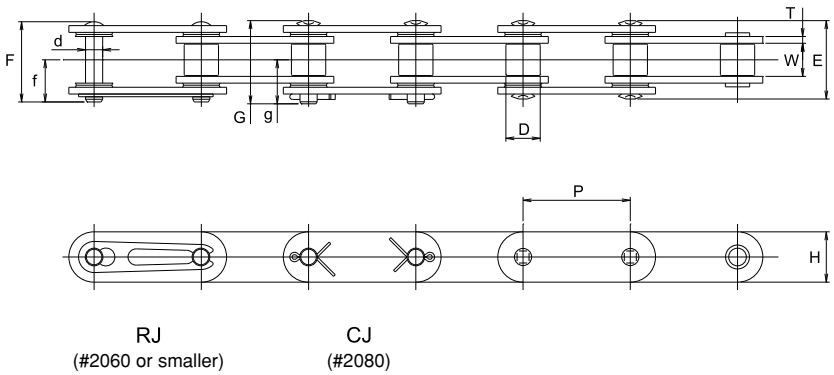

RJ (#2060 or smaller)

CJ (#2080)

Attachment

A

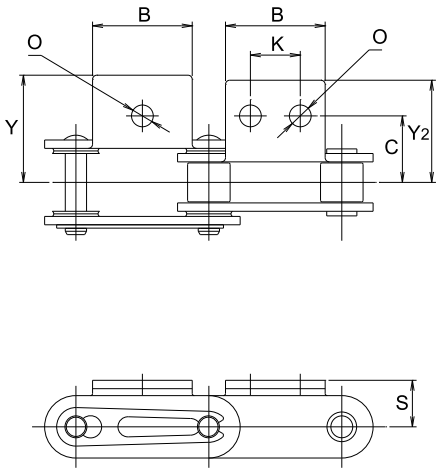

K

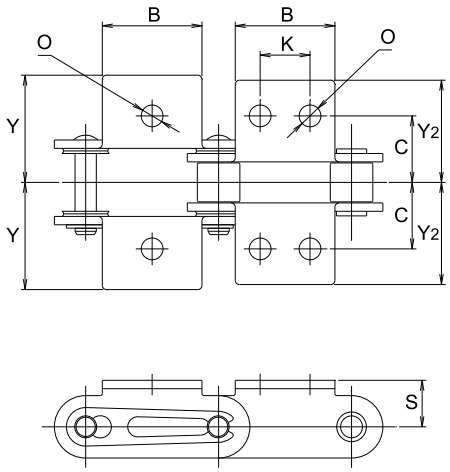

SA

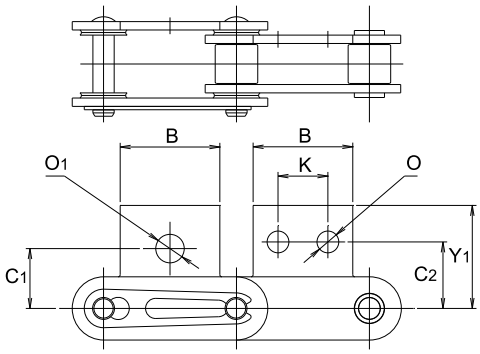

SK

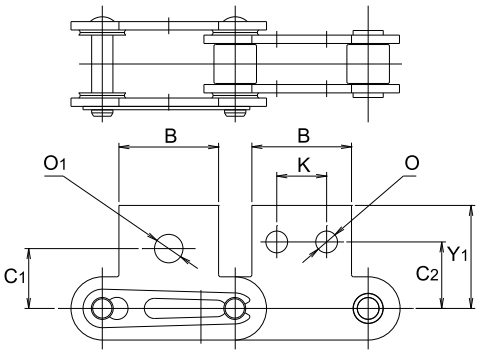

This figure shows RJ type connecting links but CJ type connecting links are used for #2080.

Dimensions of Stainless Steel X-Ring Chain (Double pitch)

● Dimensions of Chain

Unit (mm)

Chain No.	Pitch P	Roller link width W	Roller (bush) dia. D	Pin						Plate		Avg. tensile strength		Max. allowable load		Approx. weight without attachments (kg/m)
				d	E	F	G	f	g	T	H	kN	kgf	kN	kgf	
DID C2040SSLT	25.40	7.95	7.92	3.96	20	20.3	—	10.7	—	1.5	11.7	13.3	1,360	0.44	45	0.55
DID C2050SSLT	31.75	9.53	10.16	5.08	23.4	24.3	—	12.8	—	2.0	14.6	20.8	2,130	0.69	70	0.71
DID C2060HSSLT	38.10	12.70	11.91	5.95	32.6	33.2	—	17.2	—	3.2	17.5	31.0	3,170	1.03	110	1.53
DID C2080HSSLT	50.80	15.88	15.88	7.93	39.7	—	42.4	—	22.5	4.0	23.0	55.8	5,700	1.77	180	2.52

Note: The values of the avg. tensile strength and max. allowable load are for the chains (attachments aren't included).

● Dimensions of attachment

Chain No.	Pitch P	A, K				SA, SK				Common dimensions			Approx. additional weight per attachment (kg)	
		C	Y	Y_2	S	C_1	C_2	Y_1	O_1	K	B	O	A,SA	K,SK
DID C2040SSLT	25.40	12.70	20.2	17.4	9.1	11.1	13.5	19.8	5.2	9.53	19.1	3.6	0.003	0.006
DID C2050SSLT	31.75	15.88	25.1	21.8	11.1	14.3	15.9	24.6	6.8	11.91	23.8	5.2	0.007	0.014
DID C2060HSSLT	38.10	21.43	33.2	28.4	14.7	17.5	19.1	31.1	8.7	14.30	28.6	5.2	0.016	0.032
DID C2080HSSLT	50.80	27.7	42.7	36.8	19.1	22.2	25.4	40.8	10.3	19.05	38.1	6.8	0.033	0.066

Note: 1. Attachments with one hole are indicated as SA1, SK1, A1, K1, and those with two holes are indicated as SA2, SK2, A2, K2.
2. Specify the intervals between the attachments when ordering.
3. Unless otherwise specified, the attachments are attached to the outer links of even numbers.

Free Flow Chains and Other Conveyor Chains

	Free Flow Chains		Other Conveyor Chains	
	Top Roller Chain	Side Roller Chain	Hollow Pin Chain (HP)	
Name	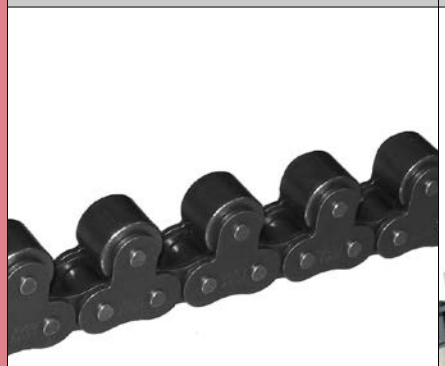			
Features	Loads can be directly placed on the top rollers. By attaching a stopper on the conveyor, loads can be temporarily stopped or stored while continuously driving the chain.	This chain is used for a free flow conveyor that runs on rails, and the side rollers carry the weight of loads. Compared with Top Roller Chain of the same material, it can carry heavier load.	The chain is connected with hollow pins that can be used for fitting various attachments.	

■ DID Free Flow Chains and Other Conveyor Chains

	Top Roller Chain						Side Roller Chain			Hollow Pin Chain	Flexible Chain	Flat Plate Type Chain
	Simplex				Duplex							
	Every two links (2P-TR)	Every link (1P-TR)	Overturn prevention (TG)	With breaks (TRB)	Every two links (2P-TR)	Every link (1P-TR)	(SR)	Meandering prevention (SG)	With breaks (SRB)	(HP)	(FX)	(F)
DID 35	—	—	—	—	—	—	—	—	—	—	—	○
DID 40	I※2	Ⓢ※3	IO※2	○	OI※2	Ⓢ※3	○※1	—	○※1	○	○	○
DID 50	I	Ⓢ	IO	—	OI	Ⓢ	○	—	○	○	○	○
DID 60	I	Ⓢ	IO	—	OI	Ⓢ	○	—	○	○	○	○
DID 80	I	Ⓢ	IO	—	OI	Ⓢ	—	—	○	—	○	○
DID 100	I	Ⓢ	IO	—	OI	Ⓢ	—	—	○	—	○	○
DID 120	—	—	—	—	—	—	—	—	—	—	—	○
DID C2040	OI	○	I	—	—	○	○	—	○	○	—	○
DID C2050	OI	○	I	—	—	○	○	—	○	○	—	○
DID C2060H	OI	○	I	—	—	○	○	—	○	○	—	○
DID C2080H	OI	○	I	—	—	○	○	—	○	○	—	○
DID C2100H	OI	○	I	—	—	○	○	—	○	—	—	○
DID C2042	OI	○	I	—	—	○	—	Ⓛ※3	○	○	—	○
DID C2052	OI	○	I	—	—	○	—	Ⓛ	○	○	—	○
DID C2062H	OI	○	I	—	—	○	—	Ⓛ	○	○	—	○
DID C2082H	OI	○	I	—	—	○	—	Ⓛ	○	○	—	○
DID C2102H	OI	○	I	—	—	○	—	Ⓛ	○	—	—	○

Note: ※ 1. Standard chains are available for those indicated with ○.
※ 2. I: Top rollers are attached to inner links.
O: Top rollers are attached to outer links.
IO: Top rollers are attached to the inner links unless specified.
OI: Top rollers are attached to the outer links unless specified.
※ 3. S: Top roller diameter is smaller compared with other chains of the same sizes.
L: Top roller diameter is larger compared with other chains of the same sizes.

Other Conveyor Chains			
	Flexible Chain (FX)	Flat Plate Type Roller Chain (F)	Name
	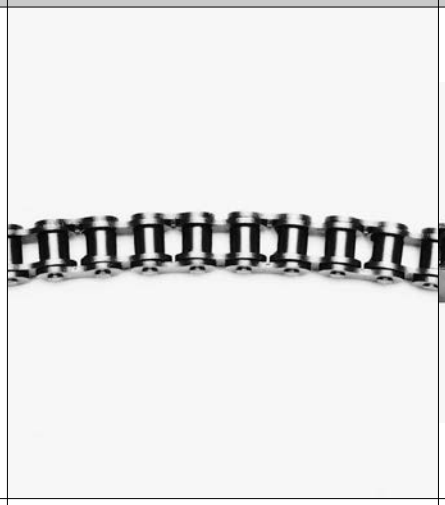	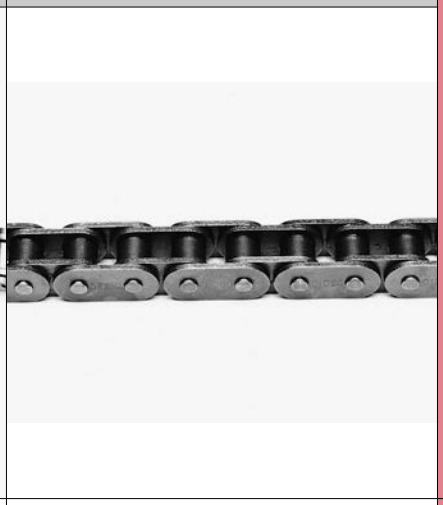	
	This chain has much sideward bending flexibility and is suitable for curved traveling.	Damage to chain guards and other parts are reduced with the use of oval-shaped flat plates, and loads can be set directly on the chain.	Features

● Every-link Top Roller Chain

[Type indication]

DID 50 1P-TR-J

- Chain size
- Intervals of top rollers
- With top rollers
- Material of top rollers [F: Steel, J: Plastic]

(The diameter of top rollers is smaller than that of every-two-link top rollers)

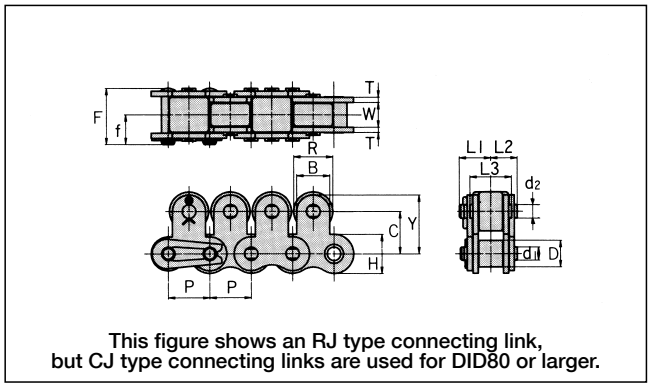

This figure shows an RJ type connecting link,
but CJ type connecting links are used for DID80 or larger.

● Every-two-link Top Roller Chain

[Type indication]

DID 50 2P-TR-F

- Chain size
- Intervals of top rollers
- With top rollers
- Material of top rollers [F: Steel, J: Plastic]

(A chain with top rollers attached to outer links is not available as standard.)

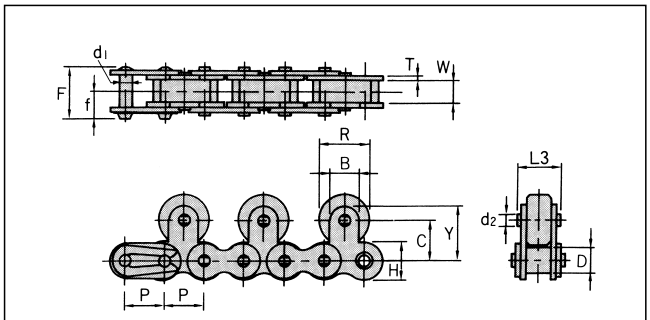

This figure shows an RJ type connecting link,
but CJ type connecting links are used for DID80 or larger.

Dimensions of chain

Unit (mm)

Chain No.	Pitch P	Roller link width W	Roller (bush) dia. D	Pin			Plate		Avg. tensile strength		Max. allowable load	
				d_1	F	f	T	H	kN	kgf	kN	kgf
DID 40 TR	12.70	7.95	7.92	3.97	17.6	9.5	1.5	12.0	18.6	1,900	2.64	270
DID 50 TR	15.875	9.53	10.16	5.09	21.9	11.6	2.0	15.0	28.4	2,900	4.41	450
DID 60 TR	19.05	12.00	11.91	5.96	26.9	14.3	2.4	18.1	44.1	4,500	6.37	650
DID 80 TR	25.40	15.88	15.88	7.94	35.4	19.0	3.2	24.0	78.4	8,000	10.7	1,100
DID100 TR	31.75	19.05	19.05	9.54	42.5	22.7	4.0	29.9	118	12,100	17.1	1,750

Dimensions of top roller

Chain No.	Every-2-link top roller								Every-link top roller									
	R	C	Y	B	d_2	L_3	Approx. weight (kg/m) Iron	Resin	R	C	Y	B	d_2	L_1	L_2	L_3	Approx. weight (kg/m) Iron	Plastic
DID 40 2P-TR	15.88	12.7	17.45	9.5	3.97	13.2	1.21	0.85	11.0	12.7	17.45	9.5	3.97	10.1	8.0	13.2	1.90	1.04
DID 50 2P-TR	19.05	16.2	22.55	12.7	5.24	16.2	1.86	1.41	15.0	16.2	22.55	12.7	5.24	12.1	10.0	16.2	2.49	1.77
DID 60 2P-TR	22.23	18.3	26.25	15.9	5.96	20.4	2.82	2.07	18.0	18.3	26.25	15.9	5.96	15.1	12.8	20.4	3.81	2.60
DID 80 2P-TR	28.58	24.6	34.15	19.1	7.94	26.1	4.79	3.62	24.0	24.6	34.15	19.1	7.94	19.0	16.4	25.7	6.62	4.68
DID100 2P-TR	39.69	31.8	44.5	25.4	9.54	31.0	7.63	5.43	30.0	31.8	44.50	25.4	9.54	22.8	19.7	31.0	9.76	6.82

Note: 1. Approx. weight indicates the value for every-two-link top roller chains.(for inner link)
2. The material of resin top roller is polyacetal.

Top roller chain series (Single pitch)

Standard	Nickel Plated	Double Guard	X,O-ring	X,O-ring (Nickel Plated)	Sintered	Sintered (Nickel Plated)
DID 40 TR	**DID 40N TR**	**DID 40WG TR**	**DID 40LX TR**	**DID 40LXN TR**	**DID C40UR TR**	**DID C40URN TR**
DID 50 TR	**DID 50N TR**	**DID 50WG TR**	**DID 50LX TR**	**DID 50LXN TR**	**DID C50UR TR**	**DID C50URN TR**
DID 60 TR	**DID 60N TR**	**DID 60WG TR**	**DID 60LX TR**	**DID 60LXN TR**	**DID C60UR TR**	**DID C60URN TR**
DID 80 TR	**DID 80N TR**	**DID 80WG TR**	**DID 80LD TR**	**DID 80LDN TR**	**DID C80UR TR**	**DID C80URN TR**
DID100 TR	**DID100N TR**	**DID100WG TR**	**DID100LD TR**	**DID100LDN TR**		

● Duplex Every-two-link Top Roller Chain

[Type indication]

Indicates that top rollers are attached to outer links.

[I] indicates that top rollers are attached to inner links. Top rollers are attached to outer links unless specified otherwise.

DID 40-2 2P-TRO-F

- Chain size
- Number of chain strands
- Intervals of top rollers
- With top rollers
- Material of top rollers [F: Steel / J: Plastic]

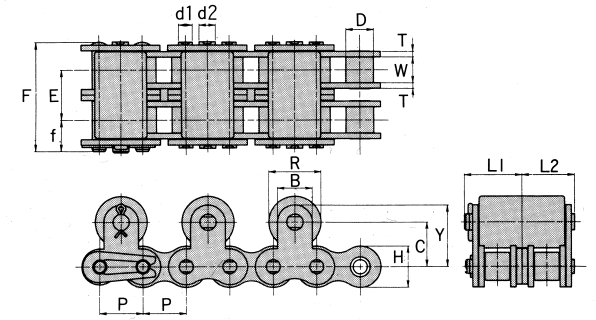

Outer link top roller type
This figure shows an RJ type connecting link, but CJ type connecting links are used for DID80 or larger.

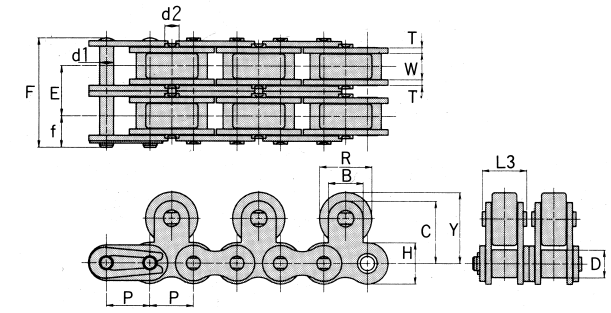

Inner link top roller type
This figure shows an RJ type connecting link, but CJ type connecting links are used for DID80 or larger.

1. Standard inner link top roller type uses two separate rollers as illustrated, but a single roller type is also available.
2. Duplex every-link top roller type is also available. In this case, dimension R changes. See the section of Every-link Top Roller Chain (P192)
3. The connecting links for DID80-2 ~ DID100-2 are cotter types (CJ type connecting links). The dimensions of pins are the same as those shown in the table of dimensions.

Dimensions of chain

Unit (mm)

Chain No.	Pitch P	Roller link width W	Roller (bush) dia. D	Transverse pitch E	Pin			Plate	
					d_1	F	f	T	H
DID 40-2 2P-TR-F	12.70	7.95	7.92	14.4	3.97	32.1	9.5	1.5	12.0
DID 50-2 2P-TR-F	15.875	9.53	10.16	18.1	5.09	40.1	11.6	2.0	15.0
DID 60-2 2P-TR-F	19.05	12.7	11.91	22.8	5.96	49.8	14.3	2.4	18.1
DID 80-2 2P-TR-F	25.40	15.88	15.88	29.3	7.94	64.7	19.0	3.2	24.1
DID100-2 2P-TR-F	31.75	19.05	19.05	35.8	9.54	78.7	22.8	4.0	29.9

Dimensions of top roller

Chain No.	R	C	Y	B	d_2	L_1	L_2	L_3
DID 40-2 2P-TR-F	15.88	12.7	17.45	9.5	3.97	17.1	15.5	13.2
DID 50-2 2P-TR-F	19.05	16.2	22.55	12.7	5.24	21.0	19.3	16.2
DID 60-2 2P-TR-F	22.23	18.3	26.25	15.9	5.96	26.6	24.2	20.4
DID 80-2 2P-TR-F	28.58	24.6	34.15	19.1	7.94	33.6	31.1	26.1
DID100-2 2P-TR-F	39.69	31.8	44.5	25.4	9.54	40.6	37.7	31.0

Note: Ask us for the delivery time

● Simplex Every-link Top Roller Chain

[Type indication]

DID C2050 1P-TR-F

- Chain size
- Intervals of top rollers
- With top rollers
- Material of top rollers — F: Steel / J: Plastic

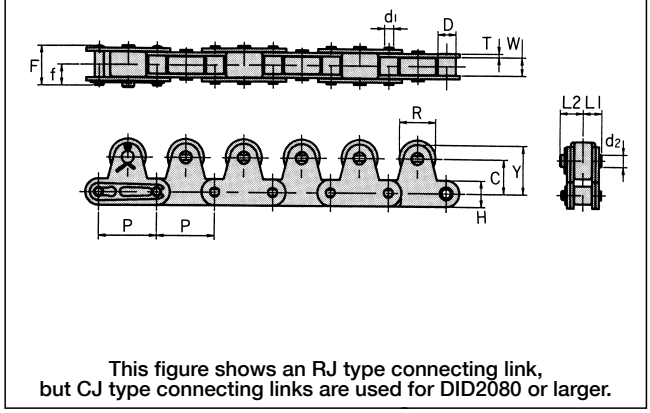

This figure shows an RJ type connecting link,
but CJ type connecting links are used for DID2080 or larger.

● Duplex Every-link Top Roller Chain

[Type indication]

DID C2060H-2 1P-TR-F

- Chain size
- Intervals of top rollers
- With top rollers
- Material of top rollers — F: Steel / J: Plastic

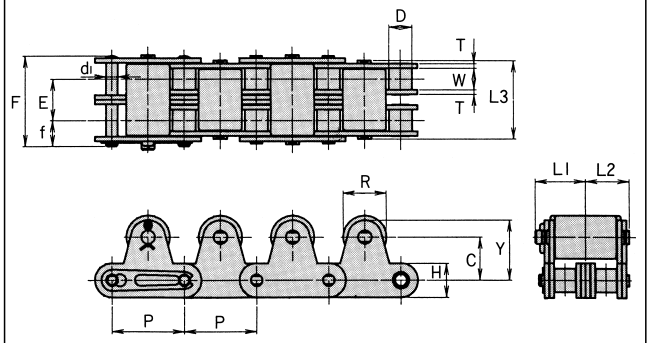

This figure shows an RJ type connecting links,
but CJ type connecting links are used for DID2080 or larger.

1. The connecting links for DIDC2080H-2 ~ C2100H-2 are cotter types. Even so, the dimensions of pins are the same as those shown in the table of dimensions.
2. In the case of DIDC2060H-2 or larger, dimension E (transverse pitch) is different from that of the standard sprocket. Refer to the tooth profile for HK type duplex chains (P118).
3. When attached to even-numbered links, the top rollers are attached to inner links unless specified otherwise.

Dimensions of chain

Unit (mm)

Chain No.	Pitch	Roller link width	Roller (bush) dia.	Pin			Plate		Duplex transverse pitch	Strength of simplex				Strength of duplex			
										Avg. tensile strength		Max. allowable load		Avg. tensile strength		Max. allowable load	
	P	W	D	d_1	F	f	T	H	E	kN	kgf	kN	kgf	kN	kgf	kN	kgf
DID C2040 TR	25.40	7.95	7.92	3.97	17.6	9.5	1.5	11.7	14.4	17.0	1,740	2.64	270	34.0	3,480	4.49	460
DID C2042 TR			15.88														
DID C2050 TR	31.75	9.53	10.16	5.09	21.9	11.6	2.0	15.1	18.1	28.7	2,930	4.41	450	57.4	5,860	7.49	760
DID C2052 TR			19.05														
DID C2060H TR	38.10	12.70	11.91	5.96	30.1	16.1	3.2	17.2	26.2	40.2	4,100	6.47	660	80.4	8,200	11.0	1,120
DID C2062H TR			22.23														
DID C2080H TR	50.80	15.88	15.88	7.94	38.7	20.6	4.0	23.3	32.6	68.6	7,000	11.2	1,150	137	14,000	19.0	1,950
DID C2082H TR			28.58														
DID C2100H TR	63.50	19.05	19.05	9.54	45.8	24.4	4.8	28.8	39.1	112	11,500	18.6	1,900	224	23,000	31.6	3,230
DID C2102H TR			36.68														

Dimensions of top roller

Chain No.	Simplex								Duplex								
	Dimensions						Approx. weight (kg/m)		Dimensions							Approx. weight (kg/m)	
	R	C	Y	L_1	L_2	d_2	Iron	Plastic	R	C	Y	d_2	L_1	L_2	L_3	Iron	Plastic
DID C2040 TR	15.88	15.0	21.0	8.45	10.1	5.24	1.31	0.89	15.88	15.0	21.0	5.24	17.1	15.5	28.0	2.48	1.64
DID C2042 TR							1.68	1.26								3.12	2.34
DID C2050 TR	19.05	19.0	26.5	10.50	12.9	5.96	2.04	1.44	19.05	19.0	26.5	5.96	22.0	19.6	34.4	3.87	2.73
DID C2052 TR							2.52	1.92								4.78	3.64
DID C2060H TR	22.23	23.0	31.6	14.75	17.4	7.94	3.62	2.71	22.23	23.0	31.6	7.94	30.5	27.9	49.0	6.87	5.14
DID C2062H TR							4.34	3.44								8.24	6.53
DID C2080H TR	28.58	29.0	39.3	17.80	20.6	9.54	5.58	4.22	28.58	29.0	39.3	9.54	36.9	34.5	60.5	10.60	8.01
DID C2082H TR							6.69	5.33								12.71	10.12
DID C2100H TR	39.69	35.4	48.7	22.10	26.6	14.29	9.02	6.42	39.69	35.4	49.7	14.29	46.2	41.7	73.0	17.13	12.19
DID C2102H TR							11.28	8.68								21.43	16.49

Note: 1. Approx. weight is of the chain with every 2 pitch top roller (for inner link).
2. The plastic top roller is made of polyacetal.

Chain No. - Top Roller Chain series (Double pitch)

Standard	Nickel Plated	Double Guard	X,O-ring	X,O-ring (Nickel Plated)	Sintered	Sintered (Nickel Plated)
DID C2040 TR	**DID C2040N TR**	**DID C2040WG TR**	**DID C2040LX TR**	**DID C2040LXN TR**	**DID C2040UR TR**	**DID C2040URN TR**
DID C2042 TR	**DID C2042N TR**	**DID C2042WG TR**	**DID C2042LX TR**	**DID C2042LXN TR**	**DID C2042UR TR**	**DID C2042URN TR**
DID C2050 TR	**DID C2050N TR**	**DID C2050WG TR**	**DID C2050LX TR**	**DID C2050LXN TR**	**DID C2050UR TR**	**DID C2050URN TR**
DID C2052 TR	**DID C2052N TR**	**DID C2052WG TR**	**DID C2052LX TR**	**DID C2052LXN TR**	**DID C2052UR TR**	**DID C2052URN TR**
DID C2060H TR	**DID C2060HN TR**	**DID C2060HWG TR**	**DID C2060HLX TR**	**DID C2060HLXN TR**	**DID C2060HUR TR**	**DID C2060HURN TR**
DID C2062H TR	**DID C2062HN TR**	**DID C2062HWG TR**	**DID C2062HLX TR**	**DID C2062HLXN TR**	**DID C2062HUR TR**	**DID C2062HURN TR**
DID C2080H TR	**DID C2080HN TR**	**DID C2080HWG TR**			**DID C2080HUR TR**	**DID C2080HURN TR**
DID C2082H TR	**DID C2082HN TR**	**DID C2082HWG TR**			**DID C2082HUR TR**	**DID C2082HURN TR**
DID C2100H TR	**DID C2100HN TR**	**DID C2100HWG TR**				
DID C2102H TR	**DID C2102HN TR**	**DID C2102HWG TR**				

Overturn Prevention Type Top Roller Chain

Top Roller Chains are also available with guide links that prevent overturning of loads by suppressing chain inclination.

[Type indication]

Guide links are attached to inner link plates unless specified otherwise.

DID 50 2P-TR-F (6P-TGI)

Top roller chain

Guide links are attached to the inner plates of every six links. (TG stands for T-shaped guide.)

This guide link is not available for single pitch every-link top roller chains. SK1 standard attachment is used as the guide links for single pitch chains.

Guide link on inner link plates for single pitch chain

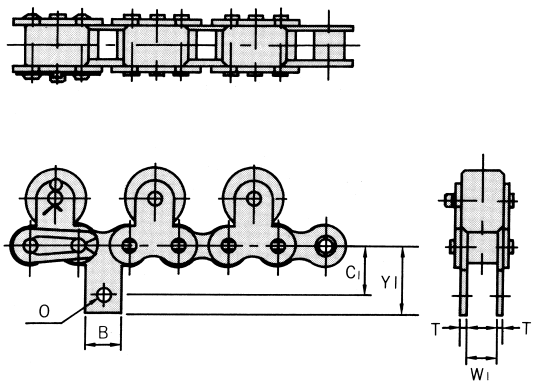

This figure shows an RJ type connecting links, but CJ type connecting links are used for DID80 or larger.

Guide link on outer link plates for single pitch chain

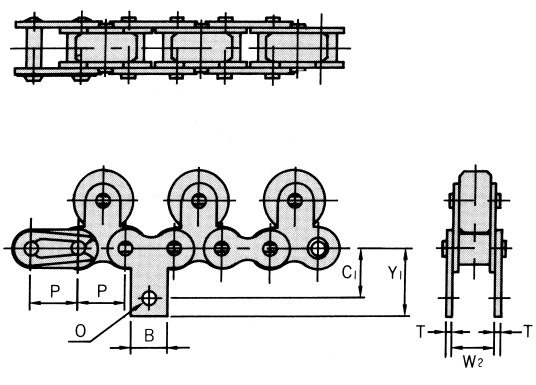

This figure shows an RJ type connecting links, but CJ type connecting links are used for DID80 or larger.

Dimensions of TG link for single pitch chain

Unit (mm)

Chain No.	Pitch P	Dimensions						
		B	Y_1	C_1	T	W_1	W_2	O
DID 40 TG	12.70	9.5	17.50	12.70	1.5	7.95	11.23	3.5
DID 50 TG	15.875	12.7	22.60	15.88	2.0	9.53	13.90	5.2
DID 60 TG	19.05	15.9	26.20	18.26	2.4	12.70	17.81	5.2
DID 80 TG	25.40	19.1	34.05	24.61	3.2	15.88	22.66	6.8
DID100 TG	31.75	25.4	42.75	31.75	4.0	19.05	27.51	8.7

Chain No. - Top Roller Chain Overturn Prevention Series (Single Pitch)

Standard	Nickel Plated	Double Guard	X,O-ring	X,O-ring (Nickel Plated)	Sintered	Sintered (Nickel Plated)
DID 40 TG	**DID 40N TG**	**DID 40WG TG**	**DID 40LX TG**	**DID 40LXN TG**	**DID C40UR TG**	**DID C40URN TG**
DID 50 TG	**DID 50N TG**	**DID 50WG TG**	**DID 50LX TG**	**DID 50LXN TG**	**DID C50UR TG**	**DID C50URN TG**
DID 60 TG	**DID 60N TG**	**DID 60WG TG**	**DID 60LX TG**	**DID 60LXN TG**	**DID C60UR TG**	**DID C60URN TG**
DID 80 TG	**DID 80N TG**	**DID 80WG TG**	**DID 80LD TG**	**DID 80LDN TG**	**DID C80UR TG**	**DID C80URN TG**
DID100 TG	**DID100N TG**	**DID100WG TG**	**DID100LD TG**	**DID100LDN TG**		

[Type indication]

Guide links are attached to inner link plates unless specified otherwise.

DID C2050 1P-TR-F (6P-TG inner)

Top roller chain

Guide links are attached to the inner plates of every six links. (TG stands for T-shaped guide.)

Guide links for double pitch chains can not be attached to outer plates.

Guide link for double pitch chain

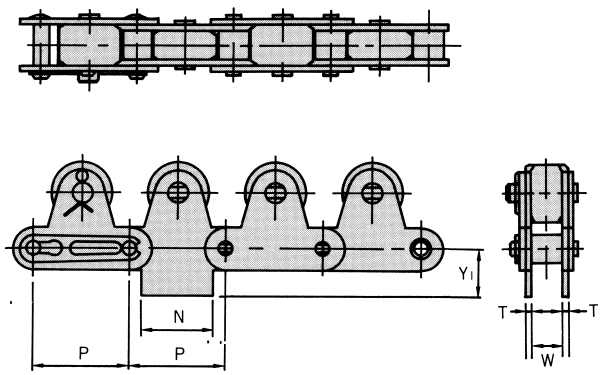

This figure shows an RJ type connecting links, but CJ type connecting links are used for DID2080 or larger.

Dimensions of TG link for double pitch chain

Unit (mm)

Chain No.	Pitch P	Dimensions N	Y_1	T	W
DID C2040 TG	25.40	19.1	12.7	1.5	7.95
DID C2050 TG	31.75	23.8	15.9	2.0	9.53
DID C2060H TG	38.10	28.6	19.1	3.2	12.70
DID C2080H TG	50.80	38.1	25.4	4.0	15.88
DID C2100H TG	63.50	47.6	31.8	4.8	19.05

Chain No. - Top Roller Chain Overturn Prevention Series (Double Pitch)

Standard	Nickel Plated	Double Guard	X,O-ring	X,O-ring (Nickel Plated)	Sintered	Sintered (Nickel Plated)
DID C2040 TG	**DID C2040N TG**	**DID C2040WG TG**	**DID C2040LX TG**	**DID C2040LXN TG**	**DID C2040UR TG**	**DID C2040URN TG**
DID C2042 TG	**DID C2042N TG**	**DID C2042WG TG**	**DID C2042LX TG**	**DID C2042LXN TG**	**DID C2042UR TG**	**DID C2042URN TG**
DID C2050 TG	**DID C2050N TG**	**DID C2050WG TG**	**DID C2050LX TG**	**DID C2050LXN TG**	**DID C2050UR TG**	**DID C2050URN TG**
DID C2052 TG	**DID C2052N TG**	**DID C2052WG TG**	**DID C2052LX TG**	**DID C2052LXN TG**	**DID C2052UR TG**	**DID C2052URN TG**
DID C2060H TG	**DID C2060HN TG**	**DID C2060HWG TG**	**DID C2060HLX TG**	**DID C2060HLXN TG**	**DID C2060HUR TG**	**DID C2060HURN TG**
DID C2062H TG	**DID C2062HN TG**	**DID C2062HWG TG**	**DID C2062HLX TG**	**DID C2062HLXN TG**	**DID C2062HUR TG**	**DID C2062HURN TG**
DID C2080H TG	**DID C2080HN TG**	**DID C2080HWG TG**			**DID C2080HUR TG**	**DID C2080HURN TG**
DID C2082H TG	**DID C2082HN TG**	**DID C2082HWG TG**			**DID C2082HUR TG**	**DID C2082HURN TG**
DID C2100H TG	**DID C2100HN TG**	**DID C2100HWG TG**				
DID C2102H TG	**DID C2102HN TG**	**DID C2102HWG TG**				

Single pitch side roller chains

A side roller chain receives the load of conveyed articles by side rollers, and is used for a free flow conveyor running on rails. Since the number of rollers for receiving the load of conveyed articles is larger, a side roller chain can convey heavier articles than a top roller chain made of the same material. Furthermore, since the center of gravity of the chain is low, stability is also better. For selection and design of chain, see P206. All the connecting links of side roller chains are cotter types (CJ type connecting links) as illustrated.

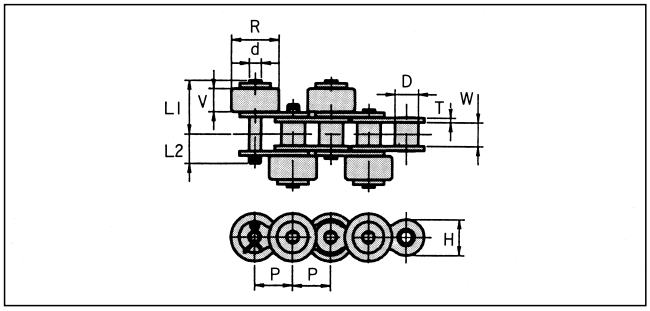

[Type indication]

DID 40 1P-SR-JT

- Chain size
- Installation intervals of side rollers
- Side roller
- Installation method: T: Staggered type; H: Parallel type
- Material of side rollers: E: Antistatic Plastic; F: Steel; J: Plastic

Unit (mm)

Chain No.	Pitch P	Roller link width W	Roller (bush) dia. D	Plate T	Plate H	Pin d	Pin L_1	Pin L_2	Pin L_3	Side roller R	Side roller V	Avg. tensile strength kN	Avg. tensile strength kgf	Max. allowable load kN	Max. allowable load kgf	Approx. weight (kg/ pc.) Plastic side roller	Approx. weight (kg/ pc.) Iron side roller
DID 40 SR	12.70	7.95	7.92	1.5	12.0	3.97	17.7	10.1	19.5	15.88	7.8	16.6	1,700	2.64	270	0.004	0.013
DID 50 SR	15.875	9.53	10.16	2.0	15.0	5.09	21.7	12.0	23.5	19.05	9.4	27.9	2,850	4.41	450	0.007	0.023
DID 60 SR	19.05	12.70	11.91	2.4	18.1	5.96	27.8	15.1	30.3	22.23	12.6	40.2	4,100	6.37	650	0.013	0.042
DID 80 SR	25.40	15.88	15.88	3.2	24.0	7.94	35.1	19.0	37.7	28.58	15.8	78.4	8,000	10.7	1,100	0.026	0.086
DID100 SR	31.75	19.05	19.05	4.0	29.9	9.54	42.4	22.8	45.4	39.69	19.0	118.0	12,100	17.1	1,750	0.084	0.197

Note: 1. L_3 indicates the value of L_1 when cotter type pins are used.
2. The material of plastic side roller is polyacetal.

Chain No. - Side Roller Chain Series (Single Pitch)

Standard	Nickel Plated	Double Guard	X,O-ring	X,O-ring (Nickel Plated)	Sintered	Sintered (Nickel Plated)
DID 40 SR	**DID 40N SR**	**DID 40WG SR**	**DID 40LX SR**	**DID 40LXN SR**	**DID C40UR SR**	**DID C40URN SR**
DID 50 SR	**DID 50N SR**	**DID 50WG SR**	**DID 50LX SR**	**DID 50LXN SR**	**DID C50UR SR**	**DID C50URN SR**
DID 60 SR	**DID 60N SR**	**DID 60WG SR**	**DID 60LX SR**	**DID 60LXN SR**	**DID C60UR SR**	**DID C60URN SR**
DID 80 SR	**DID 80N SR**	**DID 80WG SR**	**DID 80LD SR**	**DID 80LDN SR**	**DID C80UR SR**	**DID C80URN SR**
DID100 SR	**DID100N SR**	**DID100WG SR**	**DID100LD SR**	**DID100LDN SR**		

Double pitch side roller chains

S-roller type

[Type indication]

DID C2050 2P-SR-JT

- Chain size
- Installation intervals of side rollers
- Side roller
- Installation method: T: Staggered type; H: Parallel type
- Material of side rollers: E: Antistatic Plastic; F: Steel; J: Plastic

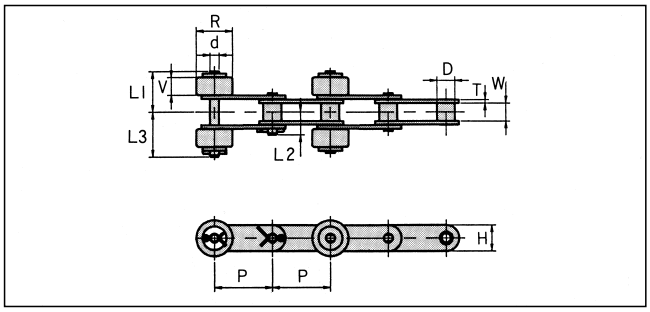

Unit (mm)

Chain No.	Pitch P	Roller link width W	Roller (bush) dia. D	Plate T	Plate H	Pin d	Pin L_1	Pin L_2	Pin L_3	Side roller R	Side roller V	Avg. tensile strength kN	Avg. tensile strength kgf	Max. allowable load kN	Max. allowable load kgf	Approx. weight (kg/ pc.) Plastic side roller	Approx. weight (kg/ pc.) Iron side roller
DID C2040 SR	25.40	7.95	7.92	1.5	11.7	3.97	17.7	10.1	19.5	15.88	7.8	17.0	1,740	2.64	270	0.004	0.013
DID C2050 SR	31.75	9.53	10.16	2.0	15.1	5.09	21.7	12.0	23.5	19.05	9.4	28.7	2,930	4.41	450	0.007	0.023
DID C2060H SR	38.10	12.70	11.91	3.2	17.2	5.96	29.4	17.0	32.0	22.23	12.6	40.2	4,100	6.47	660	0.013	0.042
DID C2080H SR	50.80	15.88	15.88	4.0	23.3	7.94	36.7	20.7	39.3	28.58	15.8	68.6	7,000	11.2	1,150	0.026	0.086
DID C2100H SR	63.50	19.05	19.05	4.8	28.8	9.54	43.7	24.5	46.9	39.69	19.0	112.0	11,500	18.6	1,900	0.084	0.197

Note: 1. The material of plastic side roller is polyacetal.

Chain No. - Side Roller Chain Series (Double Pitch)

Standard	Nickel Plated	Double Guard	X,O-ring	X,O-ring (Nickel Plated)	Sintered	Sintered (Nickel Plated)
DID C2040 SR	**DID C2040N SR**	**DID C2040WG SR**	**DID C2040LX SR**	**DID C2040LXN SR**	**DID C2040UR SR**	**DID C2040URN SR**
DID C2042 SR	**DID C2042N SR**	**DID C2042WG SR**	**DID C2042LX SR**	**DID C2042LXN SR**	**DID C2042UR SR**	**DID C2042URN SR**
DID C2050 SR	**DID C2050N SR**	**DID C2050WG SR**	**DID C2050LX SR**	**DID C2050LXN SR**	**DID C2050UR SR**	**DID C2050URN SR**
DID C2052 SR	**DID C2052N SR**	**DID C2052WG SR**	**DID C2052LX SR**	**DID C2052LXN SR**	**DID C2052UR SR**	**DID C2052URN SR**
DID C2060H SR	**DID C2060HN SR**	**DID C2060HWG SR**	**DID C2060HLX SR**	**DID C2060HLXN SR**	**DID C2060HUR SR**	**DID C2060HURN SR**
DID C2062H SR	**DID C2062HN SR**	**DID C2062HWG SR**	**DID C2062HLX SR**	**DID C2062HLXN SR**	**DID C2062HUR SR**	**DID C2062HURN SR**
DID C2080H SR	**DID C2080HN SR**	**DID C2080HWG SR**			**DID C2080HUR SR**	**DID C2080HURN SR**
DID C2082H SR	**DID C2082HN SR**	**DID C2082HWG SR**			**DID C2082HUR SR**	**DID C2082HURN SR**
DID C2100H SR	**DID C2100HN SR**	**DID C2100HWG SR**				
DID C2102H SR	**DID C2102HN SR**	**DID C2102HWG SR**				

Meandering prevention chains

An R roller type double pitch chain with side rollers uses higher inner plates to keep the rail between them and prevent derailing of the R rollers. Furthermore, larger side rollers are used for higher live load capacity.

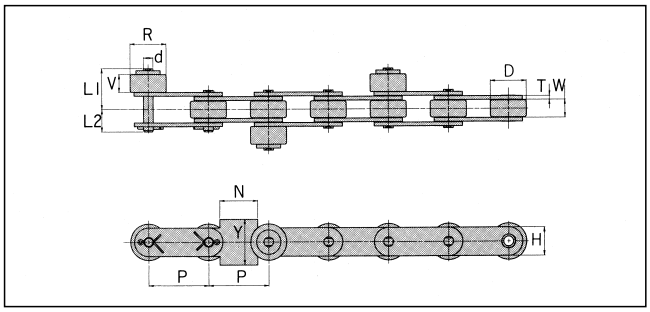

[Type indication]

DID C2052 2P-SG-JT

- Chain size
- Installation intervals of side rollers
- Meandering prevention type (Specify the intervals for the meandering prevention installation.)
- Installation method: T: Staggered type; H: Parallel type
- Material of side rollers: E: Antistatic Plastic; F: Steel; J: Plastic

Unit (mm)

Chain No.	Pitch P	Roller link width W	Roller (bush) dia. D	Plate T	Plate H	Pin d	Pin L_1	Pin L_2	Side roller R	Side roller V	N	Y	Approx. weight (kg/pc.) Plastic side roller	Approx. weight (kg/pc.) Iron side roller
DID C2042 SG	25.40	7.95	15.88	1.5	11.7	3.97	22.9	10.1	23	13	16.5	19.0	0.016	0.043
DID C2052 SG	31.75	9.53	19.05	2.0	15.1	5.09	25.3	12.1	27	13	20.0	24.0	0.023	0.060
DID C2062H SG	38.10	12.70	22.23	3.2	17.2	5.96	29.8	17.0	30	13	25.4	27.0	0.031	0.075

Note: The material of plastic side roller is polyacetal.

Chain No. - Side Roller Chain Meandering Prevention Series (Double Pitch)

Standard	Nickel Plated	Double Guard	X,O-ring	X,O-ring (Nickel Plated)	Sintered	Sintered (Nickel Plated)
DID C2042 SG	**DID C2042N SG**	**DID C2042WG SG**	**DID C2042LX SG**	**DID C2042LXN SG**	**DID C2042UR SG**	**DID C2042URN SG**
DID C2052 SG	**DID C2052N SG**	**DID C2052WG SG**	**DID C2052LX SG**	**DID C2052LXN SG**	**DID C2052UR SG**	**DID C2052URN SG**
DID C2062H SG	**DID C2062HN SG**	**DID C2062HWG SG**	**DID C2062HLX SG**	**DID C2062HLXN SG**	**DID C2062HUR SG**	**DID C2062HURN SG**

If the revolution friction resistance of the roller is too small, loads can be stuck with the slightest friction. The revolution friction resistance of the Free Flow Chain is enhanced by applying breaks for some of the rollers to prevent accumulation of loads.

Top Roller Chain with Breaks (TRB)

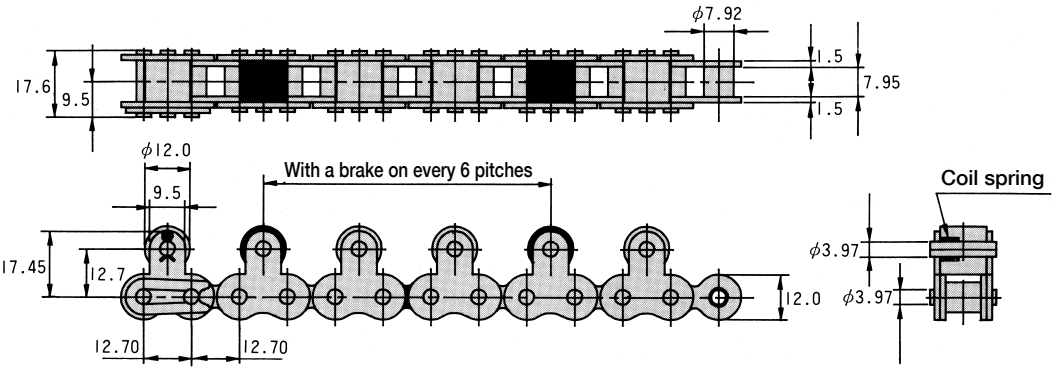

The above figure is an example of DID40 Top Roller Chain with breaks.

Side Roller Chain with Breaks (SRB)

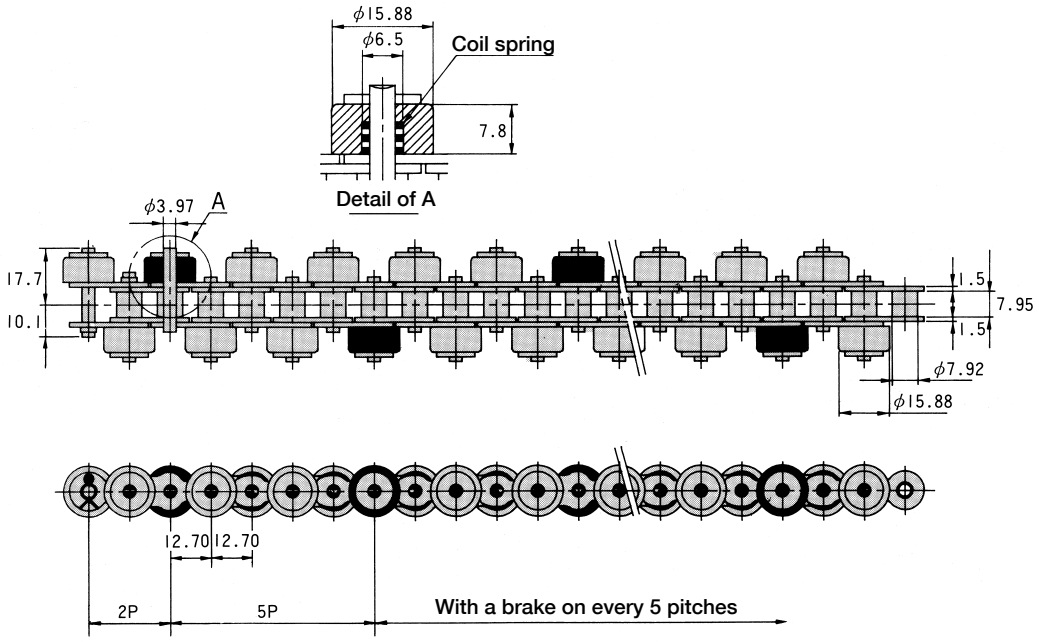

The above figure is an example of DID40 Side Roller Chain with breaks.

● Single pitch chain

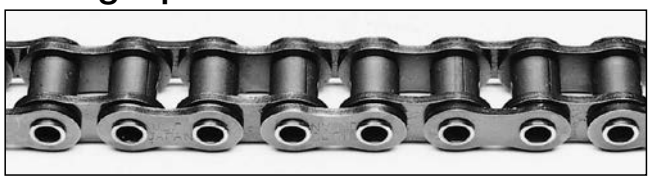

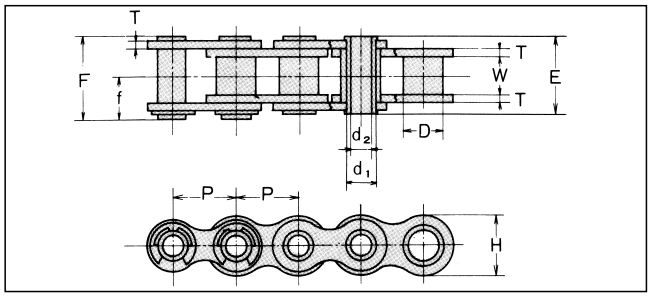

This chain is connected by hollow pins, and the hollows can be used to attach various attachments. In hollow pin chain, the hollow pins are the same as the bushings of the corresponding standard chain in diameter, so hollow pin chain can be regarded as bushing chain that contains bushings of the same diameter as that of the rollers of the corresponding standard chain.
Standard sprockets can be used.
For design of chain transmission, refer to the slow-speed selection on P123.
The connecting links are special snap ring types for hollow pin chain as illustrated.
Since no offset link is available, the number of links should be an even number.

Unit (mm)

Chain No.	Pitch P	Roller link width W	bush dia. D	Pin					Plate		Avg. tensile strength		Max. allowable load		Approx. weight (kg/m)
				d_1	d_2	E	F	f	T	H	kN	kgf	kN	kgf	
DID 40HP	12.70	7.95	7.92	5.62	4.00	16.0	17.5	9.5	1.5	12.0	10.7	1,000	1.76	180	0.52
DID 50HP	15.875	9.53	10.16	7.20	5.12	20.2	21.7	11.6	2.0	15.0	19.6	2,000	3.13	320	0.86
DID 60HP	19.05	12.70	11.91	8.45	5.99	25.1	26.8	14.3	2.4	18.1	26.4	2,700	4.31	440	1.20

Note: The values of average tensile strength and maximum allowable load are for chains.

● Double pitch chain

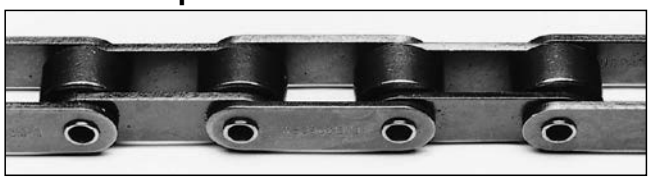

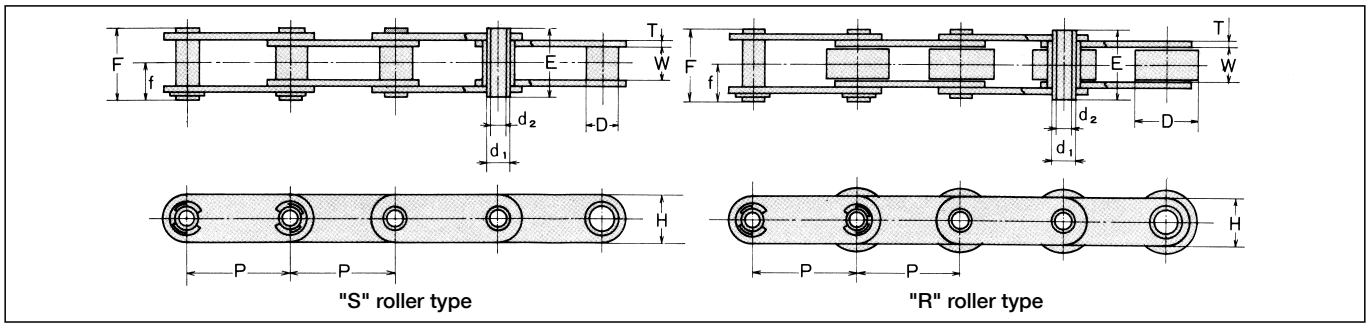

Unit (mm)

Chain No.	Pitch P	Roller link width W	Roller (bush) dia. D	Pin					Plate		Avg. tensile strength		Max. allowable load		Approx. weight (kg/m)
				d_1	d_2	E	F	f	T	H	kN	kgf	kN	kgf	
DID C2040HP	25.40	7.95	7.92	5.62	4.00	16.0	17.5	9.5	1.5	11.7	10.7	1.100	1.76	180	0.44
DID C2042HP			15.88												0.81
DID C2050HP	31.75	9.53	10.16	7.20	5.12	20.2	21.7	11.6	2.0	15.1	19.6	2,000	3.13	320	0.75
DID C2052HP			19.05												1.21
DID C2060HP	38.10	12.70	11.91	8.45	5.99	25.1	26.8	14.3	2.4	17.2	26.4	2,700	4.21	430	1.32
DID C2062HP			22.23												2.79
DID C2080HP	50.80	15.88	15.88	11.30	8.02	32.5	34.1	17.8	3.2	23.3	48.0	4,900	7.65	780	1.72
DID C2082HP			28.58												2.67

Note: The values of average tensile strength and maximum allowable load are for chains.

Chain No. - Hollow Pin Chain Series

(Single Pitch)

Standard	Nickel Plated	Double Guard
DID 40HP	**DID 40HPN**	**DID 40HPWG**
DID 50HP	**DID 50HPN**	**DID 50HPWG**
DID 60HP	**DID 60HPN**	**DID 60HPWG**

(Double Pitch)

Standard	Nickel Plated	Double Guard
DID C2040HP	**DID C2040HPN**	**DID C2040HPWG**
DID C2042HP	**DID C2042HPN**	**DID C2042HPWG**
DID C2050HP	**DID C2050HPN**	**DID C2050HPWG**
DID C2052HP	**DID C2052HPN**	**DID C2052HPWG**
DID C2060HP	**DID C2060HPN**	**DID C2060HPWG**
DID C2062HP	**DID C2062HPN**	**DID C2062HPWG**
DID C2080HP	**DID C2080HPN**	**DID C2080HPWG**
DID C2082HP	**DID C2082HPN**	**DID C2082HPWG**

DID Flexible Chain has great sideward bending flexibility and is suitable for curved traveling. Sprockets for JIS/ANSI Standard Roller Chain can be used for this chain. By fixing attachments, this chain can be used for curved transfer with conveyors.

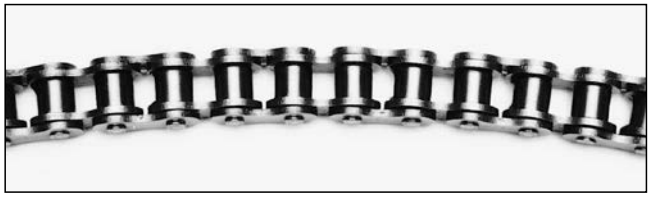

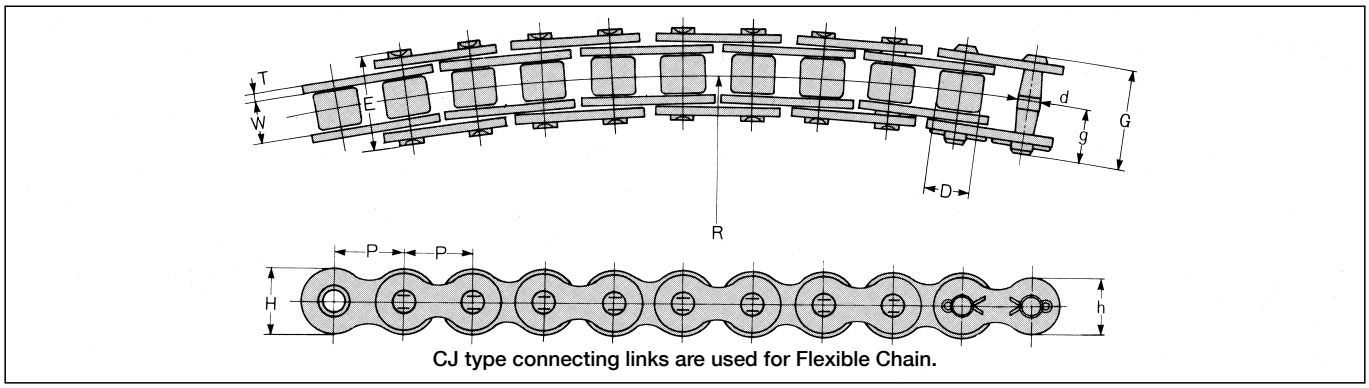

CJ type connecting links are used for Flexible Chain.

Unit (mm)

Chain No.	Pitch	Roller link width	Roller dia.	Pin				Plate			Min. lateral bending radius	Avg. tensile strength		Max. allowable load		Approx. weight
	P	W	D	d	E	G	g	T	H	h	R	kN	kgf	kN	kgf	(kg/m)
DID 40FX	12.70	7.95	7.92	3.97	16.9	18.6	10.4	1.5	12.0	10.4	350	15.7	1,600	1.86	190	0.60
DID 50FX	15.875	9.53	10.16	5.09	20.7	22.0	11.9	2.0	15.0	13.0	400	24.5	2,500	2.84	290	1.03
DID 60FX	19.05	12.70	11.91	5.96	25.8	28.4	15.4	2.4	18.1	15.6	500	35.3	3,600	4.02	410	1.31
DID 80FX	25.40	15.88	15.88	7.94	33.8	36.5	19.5	3.2	24.0	20.8	600	61.8	6,300	6.96	710	2.60

Note 1. The radius of the curve must be set larger than the values above.
2. The values of average tensile strength and maximum allowable load are for chains.

Chain No. - Flexible Chain Series

Standard	Nickel Plated	Double Guard
DID 40FX	**DID 40FXN**	**DID 40FXWG**
DID 50FX	**DID 50FXN**	**DID 50FXWG**
DID 60FX	**DID 60FXN**	**DID 60FXWG**
DID 80FX	**DID 80FXN**	**DID 80FXWG**

Flat Type Roller Chain

This chain is suited for conveyor systems because it has flat plates that cause little damage to components such as chain guides. (The forms of outer plates and inner plates are the same.)

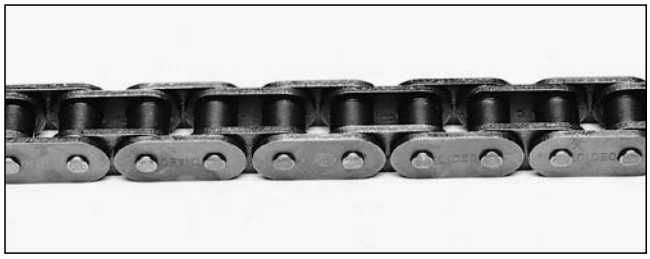

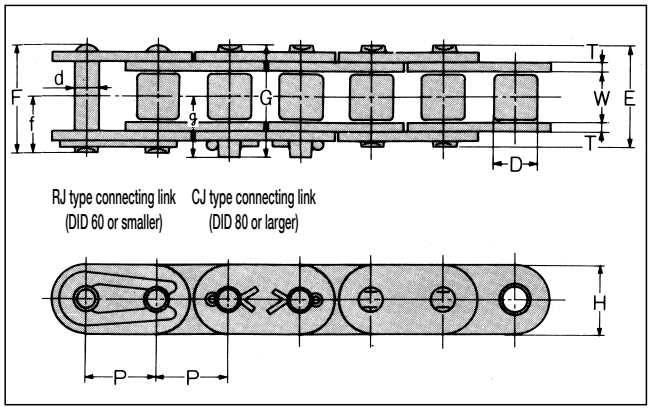

Unit (mm)

Chain No.	Pitch	Roller link width	Roller (Bush) dia.	Pin						Plate		Avg. tensile strength		Avg. tensile strength (kg/m)
	P	W	D	d	E	F	G	g	f	T	H	kN	kgf	
DID35F	9.525	4.78	(5.08)	3.59	12.0	13.1	—	—	7.3	1.25	9.0	11.2	1,150	0.39
DID40F	12.70	7.95	7.92	3.97	16.5	17.6	—	—	9.5	1.5	12.0	19.1	1,950	0.65
DID50F	15.875	9.53	10.16	5.09	20.3	21.9	—	—	11.6	2.0	15.0	30.8	3,150	1.15
DID60F	19.05	12.70	11.91	5.96	25.4	26.9	—	—	14.3	2.4	18.1	44.1	4,500	1.70
DID80F	25.40	15.88	15.88	7.94	32.6	—	35.4	19.0	—	3.2	24.0	78.4	8,000	2.67
DID100F	31.75	19.05	19.05	9.54	39.5	—	42.5	22.7	—	4.0	29.9	118	12,100	4.19
DID120F	38.10	25.40	22.23	11.11	49.7	—	53.0	28.2	—	4.8	35.9	166	17,000	6.12

Note: Consult us for sizes other than the above.

Chain No. - Flat Type Roller Chain Series

Standard	Nickel Plated	Double Guard	High Guard	X,O-ring	X,O-ring (Nickel Plated)
DID 35F	**DID 35FN**	**DID 35FWG**	**DID 35FE**	**DID 35FLD**	**DID 35FLDN**
DID 40F	**DID 40FN**	**DID 40FWG**	**DID 40FE**	**DID 40FLX**	**DID 40FLXN**
DID 50F	**DID 50FN**	**DID 50FWG**	**DID 50FE**	**DID 50FLX**	**DID 50FLXN**
DID 60F	**DID 60FN**	**DID 60FWG**	**DID 60FE**	**DID 60FLX**	**DID 60FLXN**
DID 80F	**DID 80FN**	**DID 80FWG**	**DID 80FE**	**DID 80FLD**	**DID 80FLDN**
DID 100F	**DID 100FN**	**DID 100FWG**	**DID 100FE**	**DID 100FLD**	**DID 100FLDN**
DID 120F	**DID 120FN**	**DID 120FWG**	**DID 120FE**	**DID 120FLD**	**DID 120FLDN**

When you design various conveyor systems using DID small conveyor chains, the following basic conditions must be satisfied.

a. Chain tension: The actual tensile strength in operation must be significantly lower than the specified strength of the chain.

b. Strength of loaded components of chain: The actual loads applied to attachments, such as rollers of base chain, top rollers, side rollers, etc. in operation must be significantly smaller than the strength of these components.

c. Wear life of chain: Lubrication conditions to ensure the wear life of chain must be fulfilled.

d. Sag adjustment of chain: The sag of the chain must be kept optimum by tension adjusters, take-up devices, guides, etc.

e. Others: Appropriate measures are taken to prevent rail wear, machine vibration and other problems.

The following complement the above.

Calculation of Chain Tension

In general, at first, tentatively determine the chain size to be used referring to "Tentative determination of chain size". Then, obtain "Theoretical chain tension (T)" (P207) for the tentatively determined chain, and multiply the value by "Speed coefficient (K)", to obtain "Substantial chain tension (Ta)". For safety, the substantial chain tension must be lower than the "maximum allowable tension" stated in the table of dimensions of respective chains.
Consequently, the condition below should be satisfied.

Safety condition of chain tension

Substantial chain tension (Ta) =
Theoretical chain tension (T) × Speed coefficient (K)

Substantial chain tension (Ta) < Maximum allowable tension

If this condition is not satisfied, select a larger chain by one size and re-calculate.

Tentative determination of chain size

①Determine the mass (weight) per unit length of components such as chain and attachment ωc (kg/m or kgf/m) assuming that it is 10 % of the mass (weight) of the conveyed object $\omega 1$ (kg/m or kgf/m).
②In reference to the calculation formulas on P213, obtain "Theoretical chain tension (T)" (kN or kgf) and "Speed coefficient (K)", and calculate "Substantial chain tension (Ta)" (kN or kgf).
③In reference to the table of dimensions of chains, identify the minimum chain, whose "maximum allowable tension" is higher than the "Substantial chain tension (Ta)", and regard it as "tentatively decided chain".

Value of speed coefficient (K)

The speed coefficient (K) expresses the severity of operation condition according to the traveling speed of chain since the condition becomes severer as the traveling speed of chain becomes higher.
Multiply "Theoretical chain tension (T)" by "Speed coefficient (K)" to obtain "Substantial chain tension (Ta)".

Speed coefficient K

Chain speed (m/min)	Speed coefficient
Less than 15	1.0
15～30	1.2
30～50	1.4
50～70	1.6
70～90	2.2
90～110	2.8
110～120	3.2

When plastic rollers (including anti-static rollers) are used, run the chain at the speed of 70 m/min or less.

Note: When the chain speed exceeds 120 m/min, please consult us.

Calculation formulas of theoretical chain tension (T)

Conveying method	Calculation formulas of theoretical chain tension T
To convey articles horizontally. 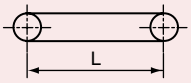	$T=(W+2.1\times\omega_c\times L)\times f_1\times\frac{g}{1{,}000}$ $kW=\frac{T\times S}{52.2\times\eta}$
To convey articles horizontally and accumulate them. (free flow conveyor) 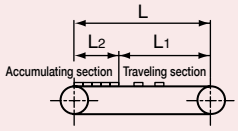	$T=\{(\omega_1+\omega_c)\times L_1\times f_1+\omega_2\times L_2\times f_2+(\omega_2+\omega_c)\times L_2\times f_3+1.1\times\omega_c\times L\times f_1\}\times\frac{g}{1{,}000}$ $kW=\frac{T\times S}{52.2\times\eta}$
To convey articles vertically. 	$T=(W+\omega_c\times V)\times\frac{g}{1{,}000}$ $kW=\frac{W\times S}{52.2\times\eta}$
To convey articles on a slope. 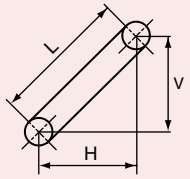	$T=\{(W+\omega_c\times L)\times\frac{H\times f_1+V}{L}+1.1\times\omega_c(H\times f_1-V)\}\times\frac{g}{1{,}000}$ $kW=\frac{S}{52.2\times\eta}\{T+\omega_c\times(H\times f_1-V)\}$
To convey articles on a slope and horizontal plane. 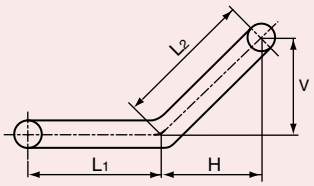	$T=\{(\frac{W}{L_1+L_2}+2.1\times\omega_c)\times L_1\times f_1+(\frac{W}{L_1+L_2}+\omega_c)\times(H\times f_1+V)+1.1\times\omega_c(H\times f_1-V)\}\times\frac{g}{1{,}000}$ $kW=\frac{S}{52.2\times\eta}\{T+\omega_c\times(H\times f_1-V)\}$

Symbols:

		SI units
T	: Theoretical chain tension	kN
W	: Total mass (total weight) of the load on the conveyor	kg
ω1	: Mass (weight) of load per unit length in the traveling section ω1 = Total mass (total weight) of load in the traveling section (kg or kgf) ÷ Length of traveling section L1 (m)	kg/m
ω2	: Mass (weight) of load per unit length in the accumulating section ω2 = Total mass (total weight) of load in the accumulating section (kg or kgf) ÷ Length of accumulating section L2 (m)	kg/m
ω3	: Mass (weight) of components such as chain and attachments per unit length	kg/m
S	: Chain speed (traveling speed of chain) m/min.	m/min.
η	: Transmission efficiency of drive section	
g	: Gravitational acceleration = 9.80665 m/s2	
kW	: Required power	

- As for L, L1, L2, V and H, see the illustrations showing conveying methods.
- As for coefficients of friction f1, f2 and f3, see P214.

Values of coefficients of friction

f_1: Coefficient of friction of traveling chain. See the following tables according to the cases.

- When the rollers of chain roll on rails ····· Table 1
- When side rollers roll on the floor ····· Table 2
- When plates slide on rails such as the case of flat type chain ····· Table 3

The same values can be used for f1 of the traveling section of free flow conveyor.

Table 1

f_1 used when the rollers of chain roll			
Chain type		Lubrication	
		Not provided	Provided
Chain with steel rollers	**S** rollers	0.21	0.14
	R rollers	0.12	0.08
Chain with plastic rollers	**S** rollers	0.12	—
	R rollers	0.08	
Chain with sintered bushing rollers	**S** rollers	0.14	—
	R rollers	0.08	

Table 2

f_1 used when side rollers roll on the floor		
Chain type	Lubrication	
	Not provided	Provided
Chain with steel rollers	0.09	0.06
Chain with plastic rollers	0.06	—
Chain with anti-static plastic rollers	0.06	—
Chain with plastic rollers and brakes	0.09	—

Table 3

f_1 used when the plates of chain slide (in the case of iron rail)	
Without lubrication **0.3**	With lubrication **0.2**

f_2: Coefficient of friction acting between conveyed articles and chain in the accumulating section of free flow conveyor.
Therefore, it is a frictional resistance when the side rollers or top rollers roll while being loaded with articles. Table 4 shows the values.

Table 4

Type of side rollers or top rollers	f_2	
	Without lubrication	With lubrication
steel rollers	0.09	0.06
Plastic rollers	0.06	—
Anti-static plastic rollers	0.06	—
Plastic rollers with brakes	0.09	—

f_3: Coefficient of friction acting between the chain and rail in the accumulating section of free flow conveyor.
In the cases other than double speed free flow conveyor, see Table 1~3 since f_1 equals f_3.

Strength of Loaded Components

The load on the conveyor is applied to the attachments, top rollers, side rollers, etc. of the chain. Confirm that the strength of these components is sufficient.
Various strength calculation methods are applied according to usages of chain. Only the allowable loads of rollers of the chain, top rollers and side rollers are shown below.

Allowable loads per one roller of chain, top roller and side roller

UnitN (kgf/pc.)

Chain No.	Roller of chain		Top roller		Side roller	
	Steel	Plastic	Steel	Plastic	Steel	Plastic
DID 40, C2040	156 (16)	—	156 (16)	49 (5)	156 (16)	49 (5)
DID C2042	627 (64)	196 (20)	156 (16)	49 (5)	156 (16)	117 (12)
DID 50, C2050	225 (23)	—	225 (23)	68 (7)	225 (23)	68 (7)
DID C2052	989 (98)	294 (30)	225 (23)	68 (7)	225 (23)	137 (14)
DID 60, C2060H	372 (38)	—	372 (38)	107 (11)	372 (38)	107 (11)
DID C2062H	1,530 (157)	490 (50)	372 (38)	107 (11)	372 (38)	156 (16)
DID 80, C2080H	627 (64)	—	627 (64)	176 (18)	627 (64)	176 (18)
DID C2082H	2,540 (260)	882 (90)	627 (64)	176 (18)	627 (64)	—
DID 100, C2100H	912 (93)	—	912 (93)	294 (30)	912 (93)	294 (30)
DID C2102H	3,660 (374)	1,270 (130)	912 (93)	294 (30)	912 (93)	—

Examples of supporting conveyed articles

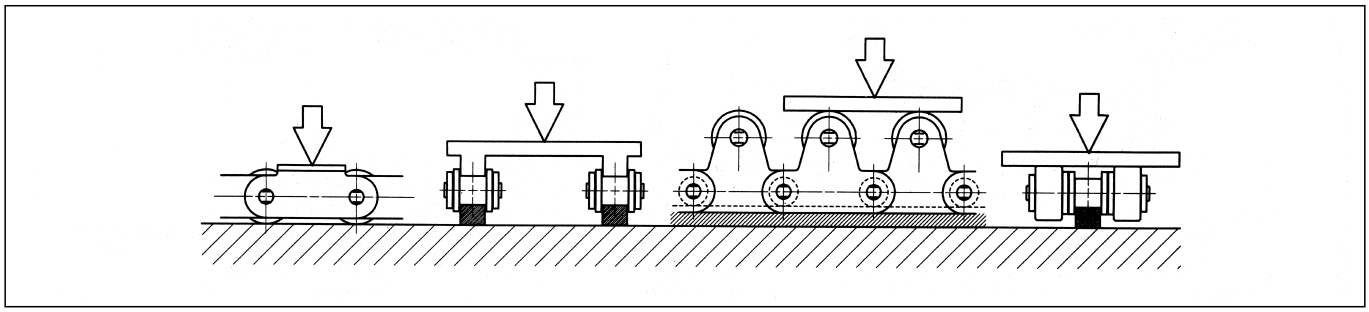

Life of Small Conveyor Chain

The chain should be replaced when it is worn out. Select an optimal size with sufficient strength and conduct appropriate lubrication to use the chain for longer period of time. Refer to the section of Lubrication (P134). If chain sag occurs heavily, we recommend using Ultimate Life Chains.

Adjustment of Chain Tension and Other Maintenance

See Installation, Adjustment and Maintenance for Roller Chain for Power Transmission (P129) and Conveyor Chain (P335).

Inquiry Sheet (For Small Conveyor Chain)

When placing an order or inquiring, please fill in the following information.
Use additional sheets when necessary.

Number of attached sheets:[ ]

Name	Date of inquiry: Year Month Day
Company name	Department
Address 〒	TEL ( ) FAX ( )
Machine concerned	Manufacturer
Chain currently used	Manufacturer

Conveyed material	Detail	
	Corrosiveness	With / without （ ）
	Abrasiveness	With / without （ ）
	Adhesion	With / without （ ）
	Temperature	Room temperature °C
	Dimensions･Mass	kg/pc.
Service conditions	Conveyed quantity	Countable articles: max kg Bulk material: max t / hr
	Machine length	m
	Lifting height	m
	Conveyance speed	m / min
	Number of chain strands	（ ）.Strands（interval m）
	Conveying method	Top loading / Lifting / Sliding / Pushing by dogs Horizontal / Vertical / Slope Other （ ）
	Operating hours	Hr / day （ days/year）
	Operation method	Continuous / Intermittent / Back and forth
	Service atmosphere	High temperature（ ℃）/ Low temperature（ ℃）/ Water splash / Submerged

Service conditions	Place of installation	Indoor / outdoor （ ）
	Lubrication	Delivery: With / without （ ） During use: Impossible / Possible（Frequency ） Kind: Manual / Drip / Other （ ）
	Motor used	AC / DC kW× rpm× unit（s）
	Chain pitch	mm
	Average tensile strength	kN （kgf）
Chain	Roller type	S / M / R / F / Special （ ）
	Attachments	Installation intervals: Every links（every mm） A（ ）/ K（ ）/ G（ ）/ SA（ ）/ SK（ ） Special（ ）
	Mirror arranged attachments	Yes / No
	Sliding parts	Rollers / Plates / Other （ ）
Sprocket	Number of teeth of driving side	NT （PCD mm）
	Number of teeth of driven side	NT （PCD mm） / Tail drum
	Shaft hole diameter	ϕ Tolerance: H7 / H8 / Other（ ）
	Hub form	Type （A / B / C） ϕ × L
	Key groove	No / Yes Demensions: ANSI: b Xt（ ） Parallel or Tapered
	Tooth Finish	Precision fusion cutting / Mechanical toothed wheel cutting / Induction hardening / Hard facing

Notes and machine layout

Please indicate in detail the form of conveyor, loading and unloading methods, forms of attachments and rails, installation method on the return side, etc.
Describe the maximum chain tension if it is known.
Also indicate any problems of the machine and chain in current use.
Inquiry sheet is also provided on our website below.
http://www.did-daido.co.jp

3·4 Conveyor Chains

- Outline of Conveyor Chains

3. DK Conveyor Chains
- Standard Conveyor Chain
- Anti-seizing Roller Conveyor Chain
- Bearing Assembled Roller Conveyor Chain
- Seal Chain
- Strong H-type and Z-type Conveyor Chain
- High Link-plate Chain
- Conveyor Chain with Side Roller
- Conveyor Chain with Top Roller

4. DK Specialty Conveyor Chains
- Specialized Application Conveyor Chain
- Water Treatment Conveyor Chain
- 3D Bending Conveyor Chain
- Others











Classification

DK conveyor chains are classified into DK Conveyor Chains and DK Specialty Conveyor Chains. DK Conveyor Chains are further classified into Standard Conveyor Chain, Strong H type Conveyor Chain and Strong Z type Conveyor Chain, stated in the order of higher strength. For DK Conveyor Chains, a large variety of attachments and additional features are available for wide-range use. The variation of chains is described in the following section in detail.
DK Specialty Conveyor Chains are customized in dimensions and material to be the most suitable for respective applications such as continuous flow conveyors and water treatment equipment. Furthermore, the unique 3D Bending Conveyor Chains are designed to run vertically and horizontally between the ceiling and the floor for conveying lifted or dragged articles. Sprockets used for DK conveyor chains are standardized to cover various numbers of teeth. See the section of DK Conveyor Chain Sprocket (p308-322). In addition to the above conveyor chains, we can custom design special conveyor chains.

Classification

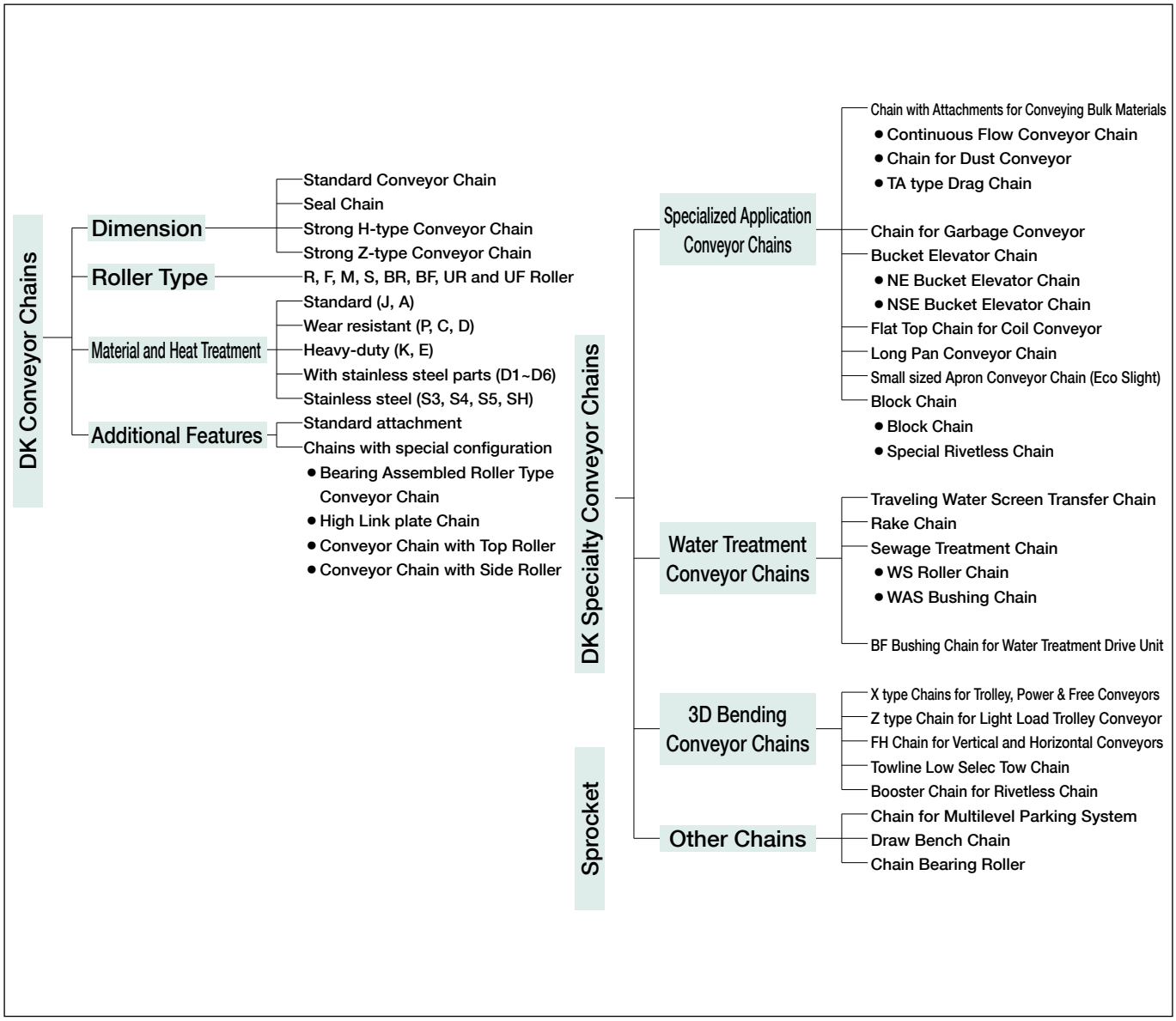

Construction and Components of DK Conveyor Chains

DK conveyor chains have structures as illustrated below, and the names of the components are stated in the drawing. These components have functions specified below.

Construction

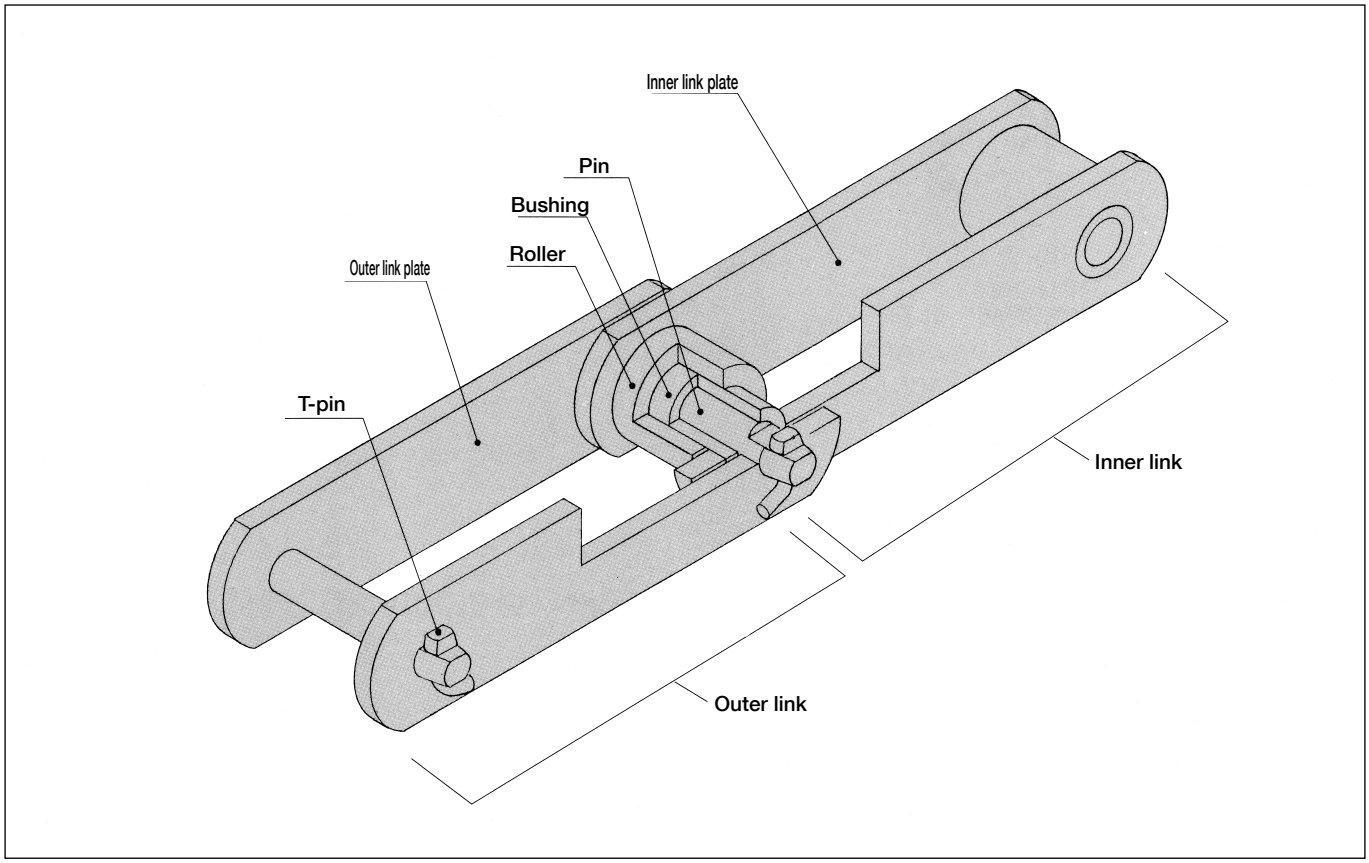

Pins

Pins support all the load acting on the chain together with plates, and when the chain is engaged with the sprockets, they slide together with bushings as bearings. They are subject to wear and especially must have high shear strength, bending strength and wear resistance. Hardened and tempered tough steel, carburized steel, or induction-hardened steel is used.

Rollers

Rollers protect the chain from shocks with the sprockets, and when the chain is engaged with the sprockets, the rollers bend the chain smoothly and act to lessen the resistance when the chain runs on a rail. They are required to have high shock fatigue strength, collapse strength and wear resistance. Hardened and tempered tough steel, carburized steel or induction-hardened steel is used.

Bushings

Bushings are located between pins and rollers and act as bearings for both the pins and rollers not to transmit the load received by the rollers directly to the pins when the chain is engaged with the sprockets. They are required to have high shock fatigue strength, collapse strength and wear resistance, and in general, carburized steel is used.

Plates

Plates are subject to repeated tension of the chain and sometimes to large shocks. They are required to have high tensile strength, and especially high shock strength and fatigue strength. High tensile steel is used for standard chains and heat treated alloy steel for heavy duty chains.

T-pins

T-pins prevent the outer plates from disengaging from the pins. They are made of soft steel since pins are generally pressed-in the outer plates and thus no large force acts on the T-pins.

How to Order DK Conveyor Chains

● Example 1

Chain pitch: 100 mm
Average tensile strength: 88.2 kN (9,000 kgf)
Roller type: F
Chain strength: Standard type
Attachment: A2 attachments are installed every two links
Order quantity: 100 links

[Type indication]

DK 09 100F-A 2P A2×100L

- 09: Average tensile strength 88.2 kN (9,000 kgf)
- 100: Chain pitch
- F: Roller F type
- A: Standard type
- 2P: Attachment installation intervals
- A2: Attachment type
- 100L: Number of links

● Example 2

Chain pitch: 100 mm
Average tensile strength: 156 kN (16,000 kgf)
Roller type: F
Chain strength: Heavy duty type
Attachment: A2 attachments are installed every two links
Order quantity: 100 links

[Type indication]

DK 09 100F-K 2P A2×100L

- K: K indicates a heavy duty chain which has the same dimensions as a standard chain but it uses components that are made of different materials and heat-treated for higher average tensile strength of 156 kgf (16,000 kgf). See the list of specification symbols (P223) .

- When replacing existing chains, please let us know the drawing no. of the chains and order quantity.
- Consult us for new designs or inquiries.

Variation of DK Regular Conveyor Chain

DK Conveyor Chains are available in a variety of dimensions, roller types, and material and heat treatment. Furthermore, the chains can be used for a broad range of application with our extensive selection of attachments and additional features.

Classified by Dimensions

DK Conveyor Chains can be classified into standard, strong H type and strong Z type with reference to the size of the base chain.
The Standard Conveyor Chain is the basic form of DK Conveyor Chains, and many attachments, materials, heat treatments, etc. are available.
The Strong H type Conveyor Chain was originally developed as a chain for bucket elevators with enhanced strength and is now available in a series. A small sized Strong H type Conveyor Chain is almost equal in strength to a large sized Standard Conveyor Chain, but since the dimensions and form differ, sprockets are not interchangeable. Generally, Strong H type Conveyor Chains are higher in strength than Standard Conveyor Chains with about the same roller diameter.
Strong Z type Conveyor Chains are further enhanced in strength than Strong H type Conveyor Chains by elevating the height of the inner plates, and the sprockets are interchangeable if the nominal number is the same. Strong H type Conveyor Chains are used in machines in which the plates slide on the floor, such as continuous flow conveyors, since the inner and outer plates have the same height.
On the other hand, Strong Z type Conveyor Chains exhibit high fatigue strength and are used in vertical conveyor bucket elevators.

Classified by Roller Type

The rollers of a conveyor chain function not only to engage the sprockets moving the chain but also to rotate and travel on a rail, conveying articles with small frictional loss. To meet various shapes of rails and prevent meandering, etc., four types of rollers, large roller, flange roller, medium roller and small roller, described on the following page are available.
Furthermore, for smoother rotation, we offer large rollers and flange rollers with built-in bearings (BR and BF rollers, respectively), and UR and UF rollers with large clearances between the bushing and the roller to prevent the entry of foreign matters into the bearings. These rollers are often used in waste processing facilities.

In this catalogue, large rollers, flange rollers, medium rollers and small rollers are respectively expressed as R roller, F roller, M roller and S roller.

①R roller

R roller Conveyor Chains have rollers with an outer diameter larger than the width of plates.
Since the rollers can easily roll, the chain is suitable for running on the floor while the rollers receive the live load.

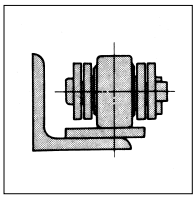

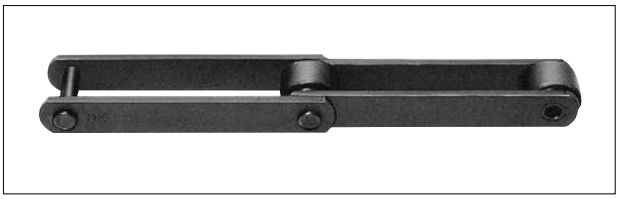

②F roller

F roller Conveyor Chains have rollers with the same outer diameter as that of R roller but with flanges.
Since the flanges can receive the force acting on the lateral sides of the chain, the chain is suitable for receiving both a live load and a lateral load.

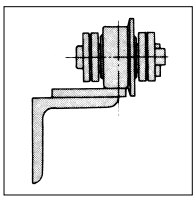

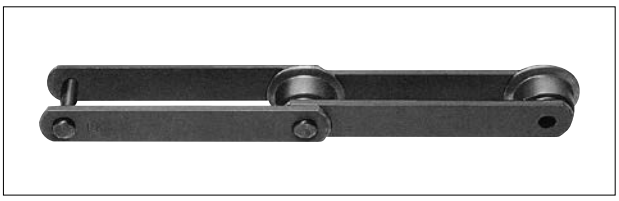

③M roller

M roller Conveyor Chains have rollers with an outer diameter slightly smaller than the width of plates.
An M roller is designed for smoother engagement with the sprockets. Since the chain is light in weight, it is suitable for vertical conveyance.

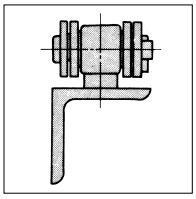

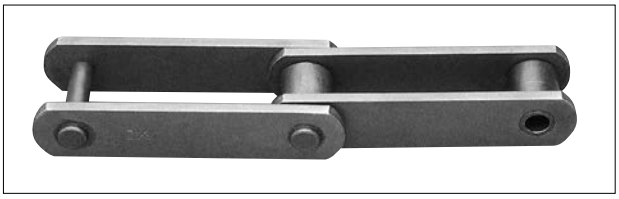

④S roller

S roller Conveyor Chains have rollers with an outer diameter smaller than that of the M roller.
The chain is suitable for vertical conveyance where rollers are less likely to be worn.

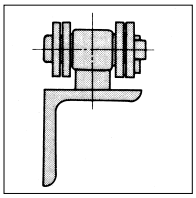

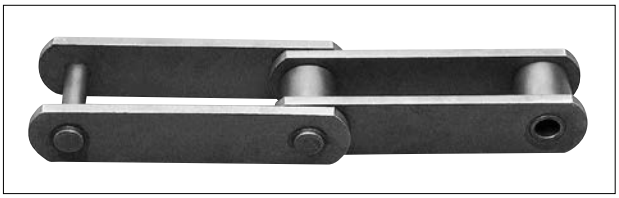

⑤BR and BF Rollers (with built-in bearings)

BR and BF Roller Conveyor Chains have mostly identical structure to R roller and F Roller Conveyor Chains, respectively, except for the bearings inside for smoother rotation.

⑥UR and UF Rollers (large clearance between bushing and roller)

UR and UF Roller Conveyor Chains have mostly identical structure to R Roller and F Roller Conveyor Chains, respectively. However, the clearances between the outer diameter of bushings and the inner diameter of the rollers are enlarged to prevent the rollers from fixing when foreign matters enter.

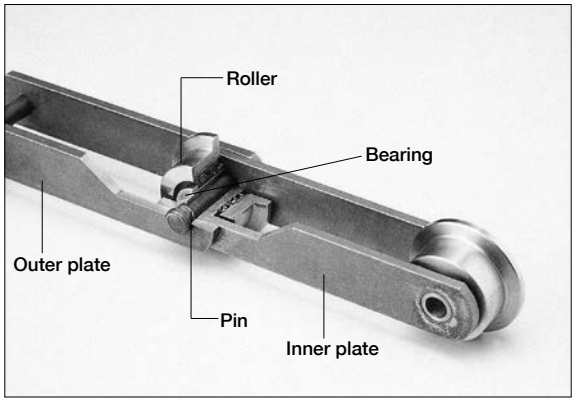

Classified by Material and Heat Treatment

DK Conveyor Chains are available in a variety of material and heat treatment for improved wear resistance, durability and even to withstand sea water, sludge and various chemicals. The following table lists the symbols, their meanings, features and applications.

Symbols

※ Chains according to specifications are listed on P219.

Environment	Material and heat treatment	Symbol	Material of respective components					Features and applications
			Plate	Pin	Bushing	Roller R,F	Roller S,M	
Ordinary environment	(Cost-effective) Standard	(J)	Carbon steel	Alloy steel Heat treatment	Carbon steel Heat treatment	Carbon steel	——	For extra light loads. Rollers are not heat-treated.
		A				Carbon steel Heat treatment		Cost-efficient chain for general use.
	High wear resistance	P						Chain for vertical conveyor such as bucket elevator; improved wear resistance between pin and bushing.
		C			Alloy steel Heat treatment		Alloy steel Heat treatment	Chain for running on a horizontal rail while rollers rotate; improved wear resistance at bushings' outer surfaces.
		D						Universal wear resistant chain adopting both C and P.
	Heavy-duty	K	Alloy steel Heat treatment			Carbon steel Heat treatment		Chain with tensile strength enhanced by plates of heat-treated alloy steel.
		E						Chain high in durability and wear resistance. Superior quality chain high in tensile strength and wear resistance.
Slightly corrosive environment	With stainless steel parts	D3	Carbon steel					Effective in an environment where rusting causes stiffening of the chain, or where smooth revolution of roller tends to diminish.
		D4	Alloy steel Heat treatment					Chain higher in tensile strength than D3.
		D1	Carbon steel					Highly effective in a more corrosive environment that D3 cannot tolerate, especially in a location where corrosion is likely to heavily wear pins and cause corrosion fatigue.
		D2	Alloy steel Heat treatment					Chain higher in tensile strength than D1.
		D5	Carbon steel					Stainless steel is adopted also for rollers to protect rollers against corrosion defects.
		D6	Alloy steel Heat treatment					Chain higher in tensile strength than D5.
Corrosive environment	Stainless steel	S4	13Cr stainless steel	13Cr stainless steel Heat treatment				The same as the following SH except that plates are not heat-treated. This chain can be used when chain tension is small.
		SH						All components are made of heat treated 13Cr stainless steel, and have excellent strength, wear resistance and corrosion resistance.
		S5						Plates are made of 18-8 stainless steel, so that the chain can be used in corrosive environment such as exposed to chemical compounds and/or under high temperature.
		S3	18-8 stainless steel					All components are made of 18-8 stainless steel, to provide exceptionally high corrosion resistance.
	Special stainless steel	SN	Carbon steel / Alloy steel Heat treatment / 13Cr stainless steel / 13Cr stainless steel Heat treatment / 18-8 stainless steel	13Cr stainless steel SN treatment				SN treatment can be any components It can be enhanced chain life, especially suitable for severe corrosion wear and fatigue parts.

Note: The standard chains are designed to be the most cost efficient. Where greater strength or higher wear resistance is required, heavy duty chains are recommended.

Classification by Surface Treatment

There are a variety of selection for heat treatment and specifications for the conveyor chains. Specific treatments can be applied not only to the chain as a whole but to each component separately, such as pins or plates only.
Select desired combinations in reference to the following explanation of features and uses.

Double Guard Coating



The surface is treated with outstanding corrosion resistant coating that approaches the resistance of stainless steel.
Double guard coating consists of double layers of two different materials. It exhibits nearly doubled corrosive resistance in the salt water spray test compared to our conventional high guard coating, and can be used in mild alkaline or mild acidic conditions up to pH3.
With its improved corrosive resistance, it can be used in circumstances where high guard or plated coatings cannot be used, and even in some conditions where only stainless steel can be used.
(Double guard coating cannot be applied to welded parts.)

High Guard Coating



High guard coated surface has superb corrosion resistance.
The surface of the chain is finished in non-gloss white highly protective coating. It has excellent resistance to salt corrosion and rusting.
Since high guard coating acts as a sacrificial anode for the chain body, you can expect sufficient corrosion resistance even when the coating has come off to some extent. Also, it can be applied to welded parts.
It is recommended for outdoor use or near the sea in circumstances where performance as high as that of stainless steel is not necessary. In circumstances that require resistance to alkaline and acid, double guard or stainless steel coating is recommended as they have better resistance than high guard.

Plating



Plating is mostly done with nickel. It is a coating with both appealing exterior and corrosion resistance. By using it with grease lubrication, it exhibits excellent corrosion resistance. You can expect the effect to delay hydrogen brittle destruction when used in circumstances where chains are exposed to sea breeze or acidic sprays.
(Nickel plating cannot be applied to welded parts.)

Symbols



Resistant against corrosive gas (by CASS test)



Resistant against rain, moisture or sea water



Resistant against alkali liquid



Resistant against acid liquid

Chain Specifications

1. Standard Conveyor Chain (for Metric and Inch series)

	Chain No.	Roller type					Tensile strength kN（kgf）							
		Large roller / Flange roller	Medium roller / Small roller	Bearing assembled roller / Large roller with large clearance / Flange roller with large clearance			Standard	Wear resistant	Heavy-duty	With stainless steel parts		Stainless steel			
		R F	M S	BF BR UR UF			A,J	C,D,P	K,E	D1,D3,D5	D2,D4,D6	S4	SH	S3	S5
Standard conveyor chain for metric series	DK 03075 DK 03100 DK 03125 DK 03150	○○	×○	×○○			34.3 (3,500)		69.6 (7,100)	34.3 (3,500)	69.6 (7,100)	29.4 (3,000)	49.0 (5,000)	31.3 (3,200)	33.3 (3,400)
	DK 07075 DK 07100 DK 07125 DK 07150	○○	×○	×○○			68.6 (7,000)		132 (13,500)	68.6 (7,000)	132 (13,500)	68.6 (7,000)	103 (10,500)	63.7 (6,500)	81.3 (8,300)
	DK 09100 DK 09125 DK 09150	○○	○○	×○○			88.2 (9,000)		156 (16,000)	88.2 (9,000)	156 (16,000)	83.3 (8,500)	132 (13,500)	73.5 (7,500)	87.2 (8,900)
	DK 11100 DK 11125 DK 11150 DK 11200	○○	○○	○○○			112 (11,500)		225 (23,000)	112 (11,500)	225 (23,000)	102 (10,500)	166 (17,000)	102 (10,500)	112 (11,500)
	DK 13150 DK 13200	○○	○○	○○○			127 (13,000)		240 (24,500)	132 (13,500)	240 (24,500)	122 (12,500)	196 (20,000)	127 (13,000)	127 (13,000)
	DK 19200 DK 19250 DK 19300	○○	○○	○○○			186 (19,000)		279 (28,500)	186 (19,000)	279 (28,500)	171 (17,500)	274 (28,000)	132 (13,500)	176 (18,000)
	DK 25200 DK 25250 DK 25300	○○	○○	○○○			245 (25,000)		392 (40,000)	245 (25,000)	392 (40,000)	205 (21,000)	323 (33,000)	186 (19,000)	225 (23,000)
	DK 32200 DK 32250 DK 32300 DK 32450	○○	○○	○○○			313 (32,000)		500 (51,000)	313 (32,000)	500 (51,000)	294 (30,000)	460 (47,000)	254 (26,000)	313 (32,000)
	DK 50250 DK 50300 DK 50450 DK 50600	○○	○○	○○○			490 (50,000)		686 (70,000)	490 (50,000)	686 (70,000)	490 (50,000)	686 (70,000)	333 (34,000)	519 (53,000)
	DK 65300 DK 65450	○○	○○	×○○			637 (65,000)		882 (90,000)	637 (65,000)	882 (90,000)	568 (58,000)	833 (85,000)	402 (41,000)	588 (60,000)
Standard conveyor chain in inch series	DK 05101	○×	×○	×○×			53.9 (5,500)		98.0 (10,000)	53.9 (5,500)	98.0 (10,000)	49.0 (5,000)	78.4 (8,000)	49.0 (5,000)	52.9 (5,400)
	DK 08066 DK 08101	×× ○○	○○ ○○	××× ×○○			78.4 (8,000)		142 (14,500)	78.5 (8,000)	142 (14,500)	68.6 (7,000)	112 (11,500)	68.6 (7,000)	73.4 (7,500)
	DK 09101	○×	○○	×○×			88.2 (9,000)		156 (16,000)	88.2 (9,000)	156 (16,000)	83.3 (8,500)	127 (13,000)	83.3 (8,500)	88.2 (9,000)
	DK 11152	○○	○○	○○○			112 (11,500)		171 (17,500)	112 (11,500)	171 (17,500)	102 (10,500)	171 (17,500)	83.3 (8,500)	117 (12,000)
	DK 13101	○×	○○	×○×			127 (13,000)		240 (24,500)	127 (13,000)	240 (24,500)	122 (12,500)	196 (20,000)	127 (13,000)	127 (13,000)
	DK 19152	○○	○○	○○○			186 (19,000)		279 (28,500)	186 (19,000)	279 (28,500)	171 (17,500)	274 (28,000)	132 (13,000)	176 (18,000)
	DK 25152	○○	○○	○○○			245 (25,000)		392 (40,000)	245 (25,000)	392 (40,000)	205 (21,000)	323 (33,000)	186 (19,000)	225 (23,000)

○ : Standard product　× : Custom-made　※Tensile Strength of SN type is same as base chain

Dimensional Drawings: DK 03075, DK 03100, DK 03125, DK 03150 (for Metric series)

R roller

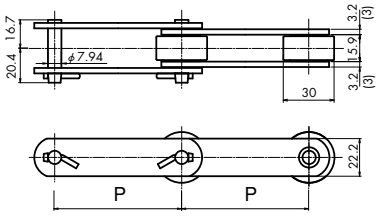

F roller

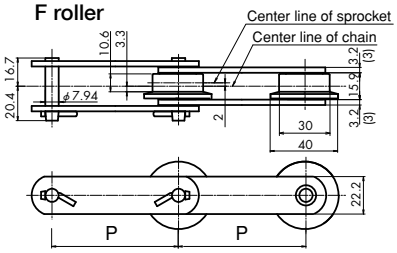

S roller

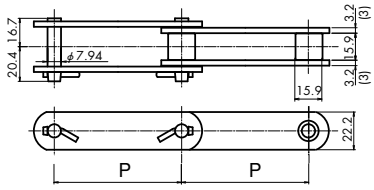

Attachment

A2

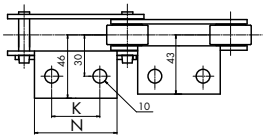

SA2

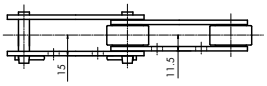

GA2



K2

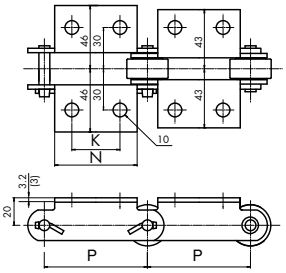

SK2

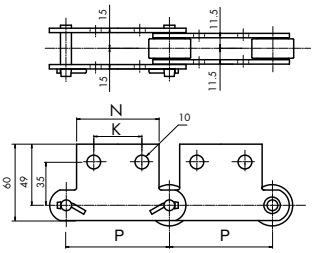

GK2

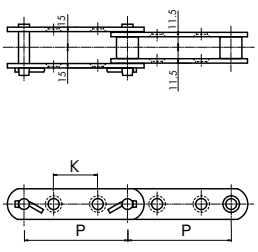

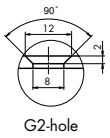

Bolt : M6
Bolt length limits
Outer link : 23mm
Inner link : 16mm

Chain No.		Avg. tensile strength kN (kgf)		Pitch	Standard attachments										
Chain size	Roller type	Standard **A,J**	Heavy duty **K,E**	P	A1・K1	A2・K2		A3・K3		SA2・SK2		GA2・GK2	G4		
					N	N	K	N	K	N	K	K	K	Y	B
DK 03075	**R,F,S**	34.3 (3,500)	69.6 (7,100)	75	—	60	35	—	—	60	35	32	—	—	—
DK 03100	**R,F,S**			100	—	65	40	—	—	65	40	40	—	—	—
DK 03125	**R,F,S**			125	—	75	50	—	—	—	—	50	—	—	—
DK 03150	**R,F,S**			150	—	85	60	—	—	—	—	60	—	—	—

Chain No.		Combination of standard attachments and rollers						Approx. weight kg/m				Attachment weight (kg/pc).				
Chain size	Roller type	A1 K1	A2 K2	A3 K3	SA2 SK2	GA2 GK2	G4	R-roller	F-roller	S-roller	M-roller	A2 SA2	A3	K2 SK2	K3	G4
DK 03075	**R,F,S**	—	R,F,S	—	R,S	S	—	2.6	2.8	1.8	—	0.05	—	0.10	—	—
DK 03100	**R,F,S**	—	R,F,S	—	R,S	R,F,S	—	2.2	2.4	1.6	—	0.06	—	0.12	—	—
DK 03125	**R,F,S**	—	R,F,S	—	—	R,S	—	2.0	2.1	1.5	—	0.07	—	0.14	—	—
DK 03150	**R,F,S**	—	R,F,S	—	—	R,F,S	—	1.8	1.8	1.4	—	0.08	—	0.16	—	—

Note: 1. Values in ( ) for the plate thickness are for the stainless steel chains. Values for plate thickness without ( ) apply to all types.
2. The dimensions of the normal and heavy duty chains are the same, but heavy duty chains are made of high strength and structural steel, and are suitable when higher safety rate, strength or wear resistance is required.
3. With Attachment GA2 and GK2, check the bolt length limits shown above.

Dimensional Drawings: DK 07075, DK 07100, DK 07125 and DK 07150 (for Metric series)

R roller

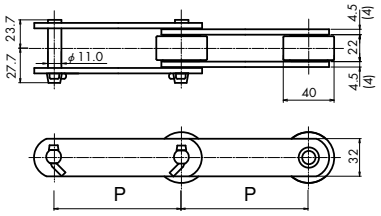

F roller

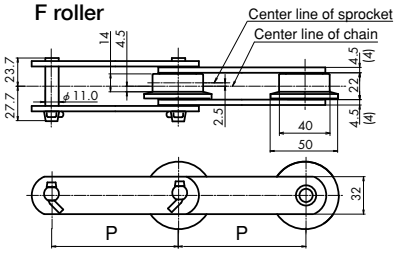

S roller

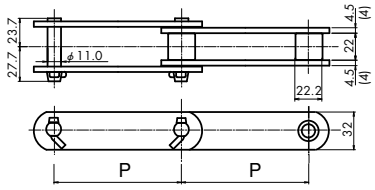

Attachment

A2

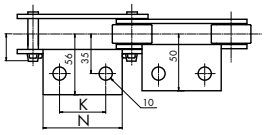

SA2

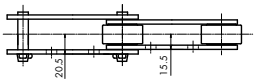

GA2

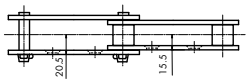

K2

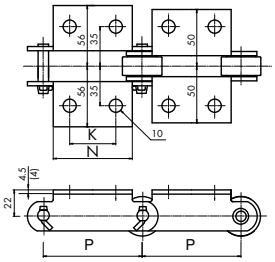

SK2

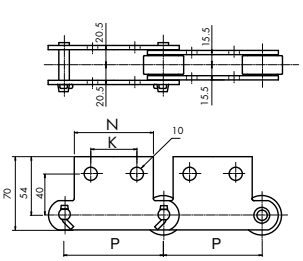

GK2

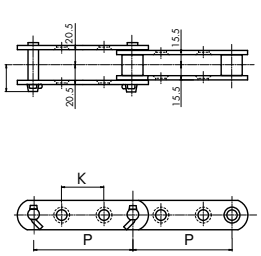

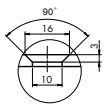

G2-hole

Bolt: M8
Bolt length limits
Outer link: 35mm
Inner link: 25mm

Chain No.		Avg. tensile strength kN (kgf)		Pitch	Standard attachments										
Chain size	Roller type	Standard A,J	Heavy duty K,E	P	A1・K1	A2・K2		A3・K3		SA2・SK2		GA2・GK2	G4		
					K	N	K	N	K	N	K	K	K	Y	B
DK 07075	**R,F,S**	68.6 (7,000)	132 (13,500)	75	—	60	35	—	—	—	—	—	—	—	—
DK 07100	**R,F,S**			100	—	65	40	—	—	65	40	40(34)	—	—	—
DK 07125	**R,F,S**			125	—	75	50	—	—	—	—	50	—	—	—
DK 07150	**R,F,S**			150	—	85	60	—	—	85	60	60	—	—	—

Chain No.		Combination of standard attachments and rollers						Approx. weight kg/m				Attachment weight (kg/pc).				
Chain size	Roller type	A1 K1	A2 K2	A3 K3	SA2 SK2	GA2 GK2	G4	R-roller	F-roller	S-roller	M-roller	A2 SA2	A3	K2 SK2	K3	G4
DK 07075	**R,F,S**	—	R,F,S	—	—	—	—	5.6	5.9	3.8	—	0.09	—	0.18	—	—
DK 07100	**R,F,S**	—	R,F,S	—	R,S	R,F,S	—	5.0	5.2	3.6	—	0.10	—	0.20	—	—
DK 07125	**R,F,S**	—	R,F,S	—	—	R,F,S	—	4.6	4.8	3.5	—	0.12	—	0.24	—	—
DK 07150	**R,F,S**	—	R,F,S	—	R,S	R,F,S	—	4.2	4.4	3.4	—	0.13	—	0.26	—	—

Note: 1. Dimensions in ( ) for the plate thickness are for the stainless steel chains. Dimensions for plate thickness without ( ) apply to all types.
2. The dimensions of the standard and heavy duty chains are the same, but heavy duty chains are made of high strength and structural steel, and are suitable when higher safety rate, strength or wear resistance is required.
3. The K dimensions in ( ) for Attachment GA2 and GK2 are for Roller F.
4. With Attachment GA2 and GK2, check the bolt length limits shown above.

Dimensional Drawings: DK 09100, DK 09125, DK 09150 and DK 09200 (for Metric series)

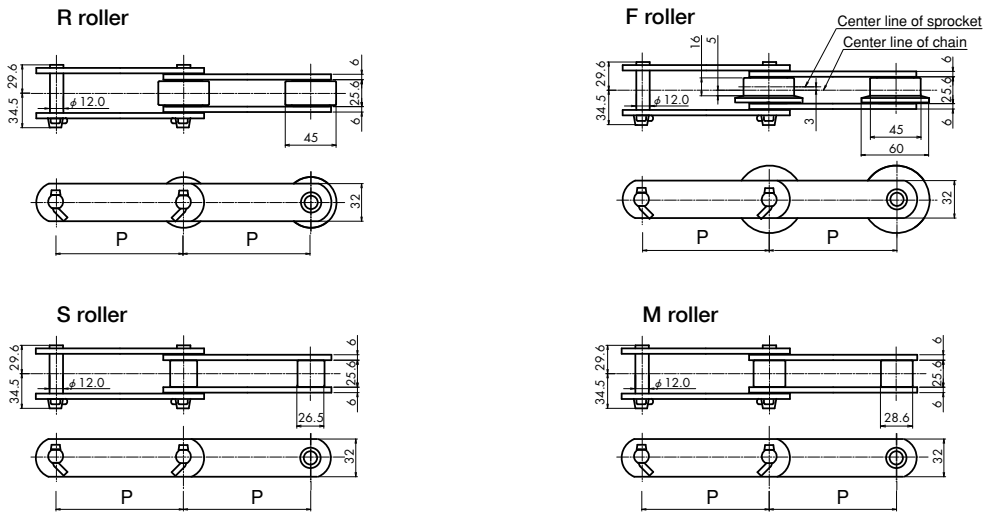

Attachment

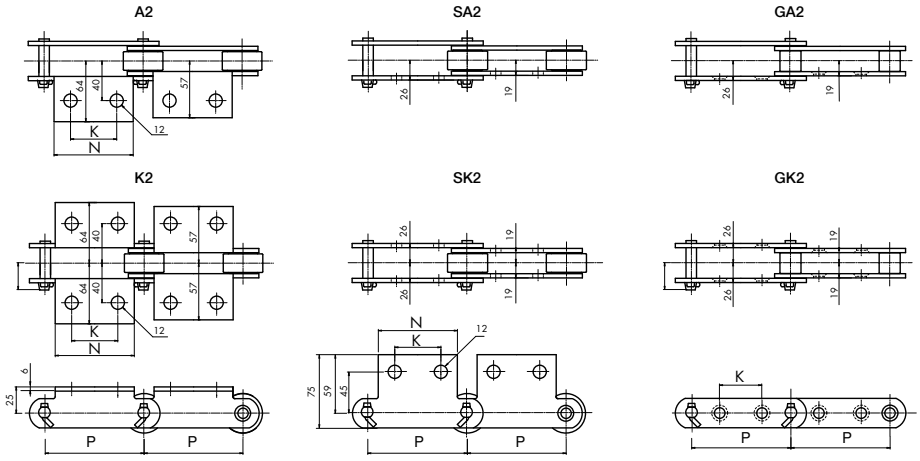

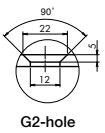

Bolt: M10
Bolt length limits
Outer link: 43mm
Inner link: 30mm

Chain No.		Avg. tensile strength kN (kgf)		Pitch	Standard attachments										
Chain size	Roller type	Standard **A,J**	Heavy duty **K,E**	P	A1・K1	A2・K2		A3・K3		SA2・SK2		GA2・GK2	G4		
					N	N	K	N	K	N	K	K	K	Y	B
DK 09100	**R,F,S,M**	88.2 (9,000)	156 (16,000)	100	—	70	40	—	—	—	—	35	—	—	—
DK 09125	**R,F,S,M**			125	—	80	50	—	—	—	—	45	—	—	—
DK 09150	**R,F,S,M**			150	—	90	60	—	—	90	60	60	—	—	—
DK 09200	**R,F,S,M**			200	—	110	80	—	—	—	—	80	—	—	—

Chain No.		Combination of standard attachments and rollers						Approx. weight kg/m				Attachment weight (kg/pc).				
Chain size	Roller type	A1 K1	A2 K2	A3 K3	SA2 SK2	GA2 GK2	G4	R-roller	F-roller	S-roller	M-roller	A2 SA2	A3	K2 SK2	K3	G4
DK 09100	**R,F,S,M**	—	R,F,S,M	—	—	S,M	—	7.1	7.4	5.1	5.7	0.16	—	0.32	—	—
DK 09125	**R,F,S,M**	—	R,F,S,M	—	—	R,F,S,M	—	6.4	6.6	4.8	5.4	0.18	—	0.36	—	—
DK 09150	**R,F,S,M**	—	R,F,S,M	—	R,S,M	R,F,S,M	—	5.8	6.0	4.6	5.1	0.20	—	0.40	—	—
DK 09200	**R,F,S,M**	—	R,F,S,M	—	—	R,F,S,M	—	5.1	5.3	4.2	4.3	0.22	—	0.44	—	—

Note: 1. The dimensions of the standard and heavy duty chains are the same, but heavy duty chains are made of high strength and structural steel, and are suitable when higher safety rate, strength or wear resistance is required.
2. With Attachment GA2 and GK2, check the bolt length limits shown above.

Dimensional Drawings: DK 11100, DK 11125, DK 11150 and DK 11200 (for Metric series)

R roller

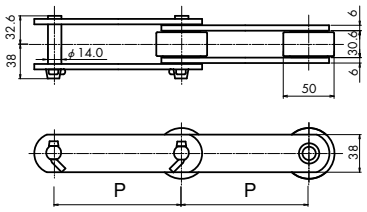

F roller

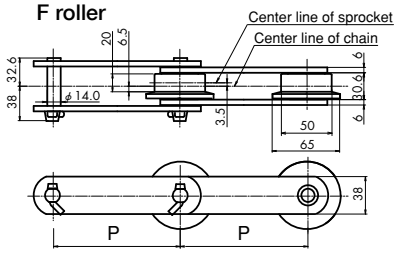

S roller

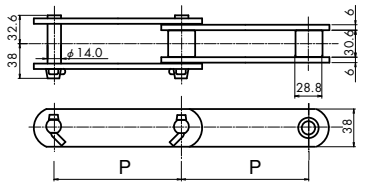

M roller

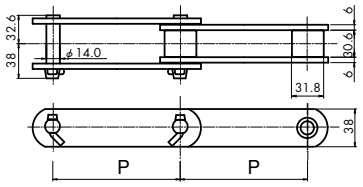

Attachment

A2

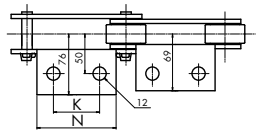

SA2

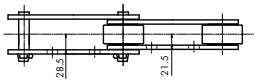

GA2

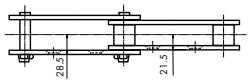

K2

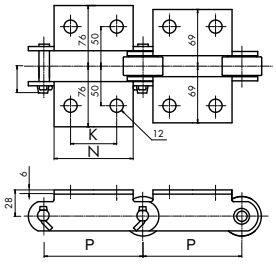

SK2

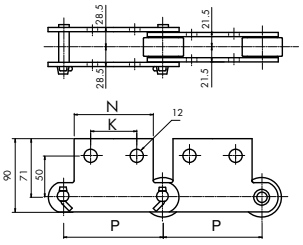

GK2

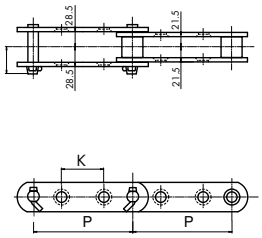

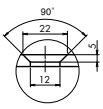

G2-hole

Bolt: M10
Bolt length limits
Outer link: 49mm
Inner link: 35mm

Chain No.		Avg. tensile strength kN (kgf)		Pitch	Standard attachments										
Chain size	Roller type	Standard **A,J**	Heavy duty **K,E**	P	A1・K1	A2・K2		A3・K3		SA2・SK2		GA2・GK2	G4		
					N	N	K	N	K	N	K	K	K	Y	B
DK 11100	**R,F,S,M**	112 (11,500)	225 (23,000)	100	—	70	40	—	—	70	40	35	—	—	—
DK 11125	**R,F,S,M**			125	—	80	50	—	—	—	—	35	—	—	—
DK 11150	**R,F,S,M**			150	—	90	60	—	—	90	60	60	—	—	—
DK 11200	**R,F,S,M**			200	—	110	80	—	—	—	—	80	—	—	—

Chain No.		Combination of standard attachments and rollers						Approx. weight kg/m				Attachment weight (kg/pc).				
Chain size	Roller type	A1 K1	A2 K2	A3 K3	SA2 SK2	GA2 GK2	G4	R-roller	F-roller	S-roller	M-roller	A2 SA2	A3	K2 SK2	K3	G4
DK 11100	**R,F,S,M**	—	R,F,S,M	—	R,S,M	S,M	—	9.6	10.1	6.6	7.1	0.19	—	0.39	—	—
DK 11125	**R,F,S,M**	—	R,F,S,M	—	—	R,F,S,M	—	8.5	8.9	6.1	6.6	0.21	—	0.42	—	—
DK 11150	**R,F,S,M**	—	R,F,S,M	—	R,S,M	R,F,S,M	—	7.6	7.9	5.7	6.1	0.24	—	0.48	—	—
DK 11200	**R,F,S,M**	—	R,F,S,M	—	—	R,F,S,M	—	6.5	6.8	5.2	5.5	0.29	—	0.58	—	—

Note: 1. The dimensions of the standard and heavy duty chains are the same, but heavy duty chains are made of high strength and structural steel, and are suitable when higher safety rate, strength or wear resistance is required.
2. With Attachment GA2 and GK2, check the bolt length limits shown above.

Dimensional Drawings: DK 13150 and DK 13200 (for Metric series)

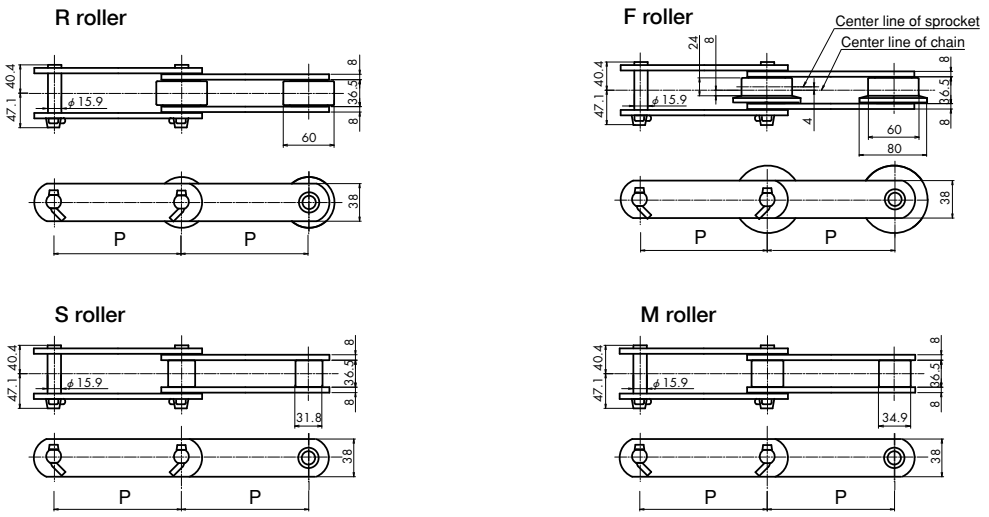

Attachment

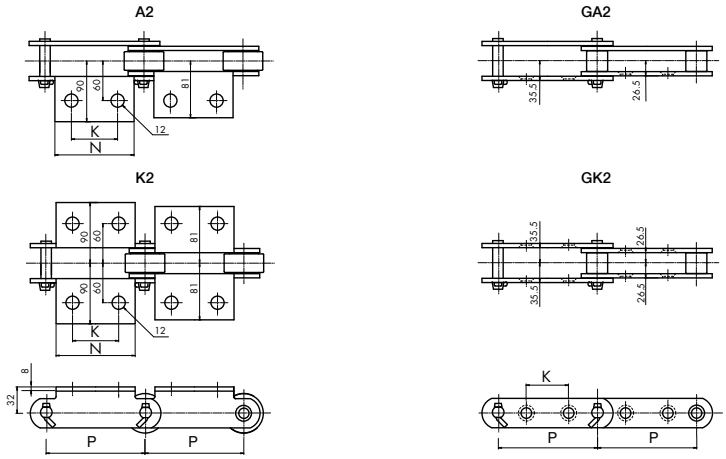

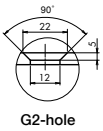

Bolt: M10
Bolt length limits
Outer link: 60mm
Inner link: 40mm

Chain No.		Avg. tensile strength kN (kgf)		Pitch	Standard attachments										
Chain size	Roller type	Standard **A,J**	Heavy duty **K,E**	P	A1・K1	A2・K2		A3・K3		SA2・SK2		GA2・GK2	G4		
					K	N	K	N	K	N	K	K	K	Y	B
DK 13150	**R,F,S,M**	127 (13,000)	240 (24,500)	150	—	90	60	—	—	—	—	45	—	—	—
DK 13200	**R,F,S,M**			200	—	110	80	—	—	—	—	80	—	—	—

Chain No.		Combination of standard attachments and rollers						Approx. weight kg/m				Attachment weight (kg/pc).				
Chain size	Roller type	A1 K1	A2 K2	A3 K3	SA2 SK2	GA2 GK2	G4	R-roller	F-roller	S-roller	M-roller	A2	A3	K2	K3	G4
DK 13150	**R,F,S,M**	—	R,F,S,M	—	—	R,F,S,M	—	10.9	11.6	7.6	8.1	0.39	—	0.78	—	—
DK 13200	**R,F,S,M**	—	R,F,S,M	—	—	R,F,S,M	—	9.3	9.8	6.9	7.2	0.48	—	0.96	—	—

Note: 1. The dimensions of the standard and heavy duty chains are the same, but heavy duty chains are made of high strength and structural steel, and are suitable when higher safety rate, strength or wear resistance is required.
2. With Attachment GA2 and GK2, check the bolt length limits shown above.

Dimensional Drawings: DK 19200, DK 19250 and DK 19300 (for Metric series)

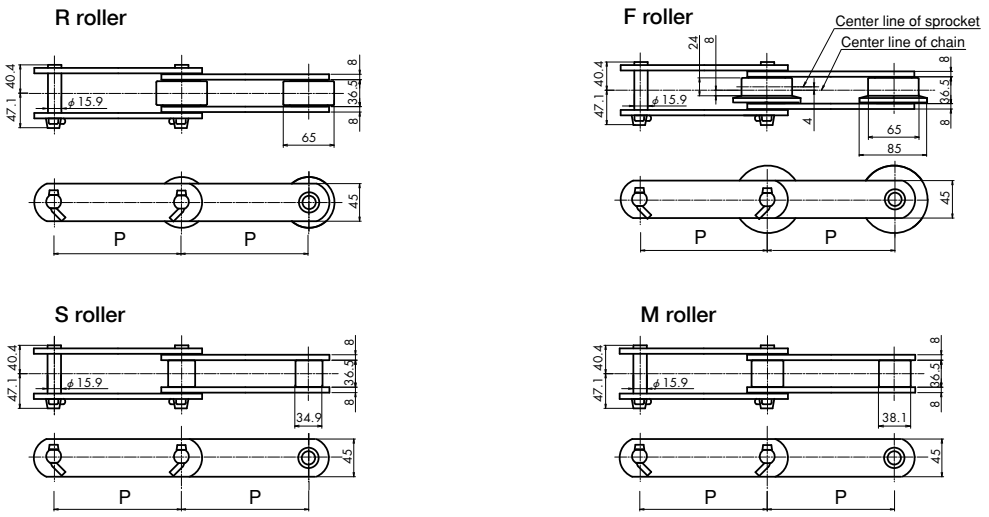

Attachment

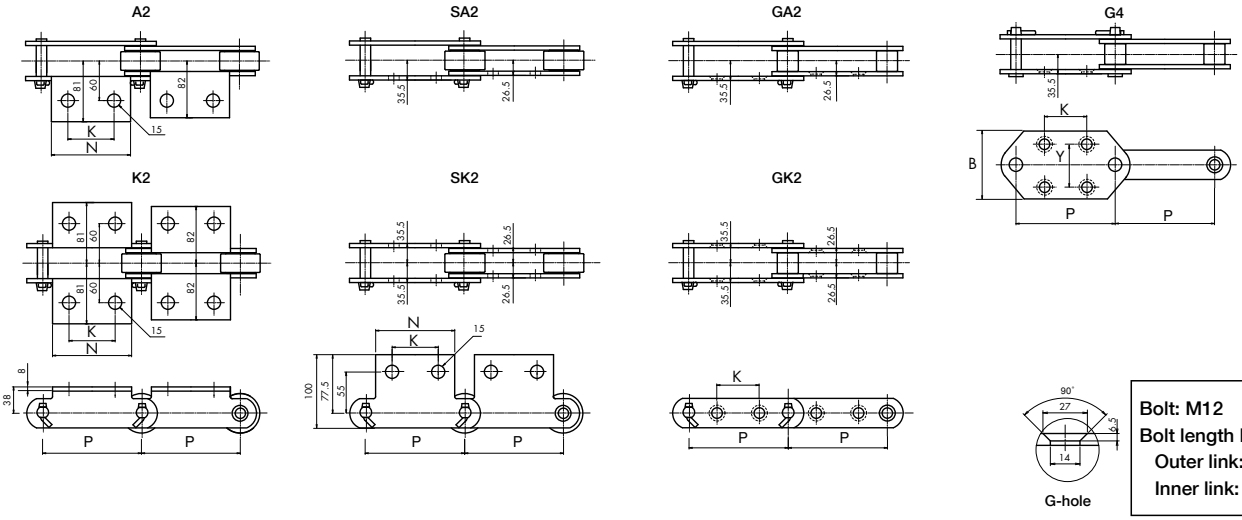

Bolt: M12
Bolt length limits
Outer link: 63mm
Inner link: 45mm

Chain No.		Avg. tensile strength kN (kgf)		Pitch	Standard attachments										
Chain size	Roller type	Standard A,J	Heavy duty K,E	P	A1・K1	A2・K2		A3・K3		SA2・SK2		GA2・GK2	G4		
					N	N	K	N	K	N	K	K	K	Y	B
DK 19200	**R,F,S,M**	186 (19,000)	279 (28,500)	200	—	120	80	—	—	120	80	80	100	80	125
DK 19250	**R,F,S,M**			250	—	170	125	—	—	170	125	125	100	80	125
DK 19300	**R,F,S,M**			300	—	220	180	—	—	—	—	150	—	—	—

Chain No.		Combination of standard attachments and rollers						Approx. weight kg/m				Attachment weight (kg/pc).				
Chain size	Roller type	A1 K1	A2 K2	A3 K3	SA2 SK2	GA2 GK2	G4	R-roller	F-roller	S-roller	M-roller	A2 SA2	A3	K2 SK2	K3	G4
DK 19200	**R,F,S,M**	—	R,F,S,M	—	R,S,M	R,F,S,M	R,F,S,M	11.5	12.1	8.4	8.6	0.49	—	0.98	—	0.95
DK 19250	**R,F,S,M**	—	R,F,S,M	—	R,S,M	R,F,S,M	R,F,S,M	10.3	10.8	7.9	8.1	0.69	—	1.38	—	1.20
DK 19300	**R,F,S,M**	—	R,F,S,M	—	—	R,F,S,M	—	9.5	10.0	7.5	7.8	0.89	—	1.78	—	—

Note: 1. The dimensions of the standard and heavy duty chains are the same, but heavy duty chains are made of high strength and structural steel, and are suitable when higher safety rate, strength or wear resistance is required.
2. With Attachment GA2 and GK2, check the bolt length limits shown above.

Dimensional Drawings: DK 25200, DK 25250 and DK 25300 (for Metric series)

R roller

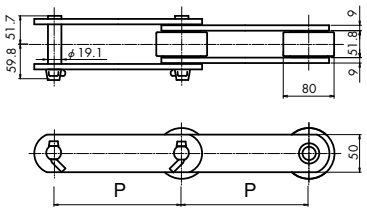

F roller

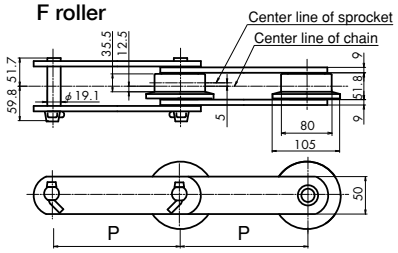

S roller

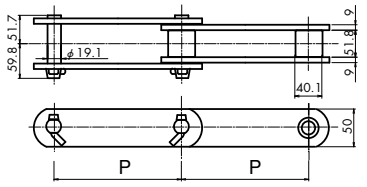

M roller

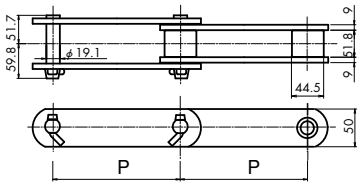

Attachment

A2

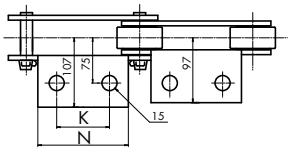

GA2

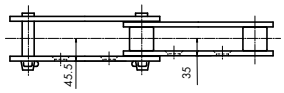

G4

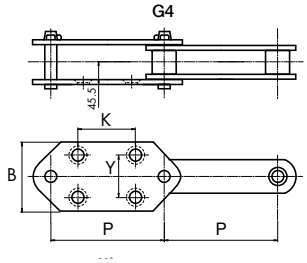

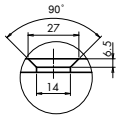

G4-hole
Bolt: M12

K2

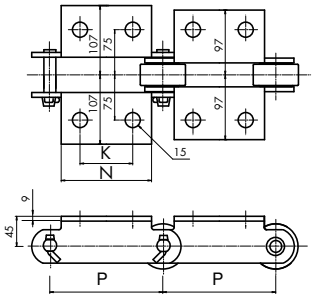

GK2

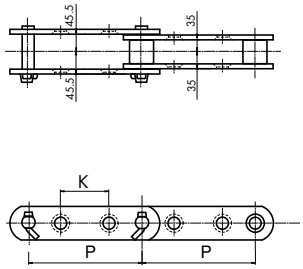

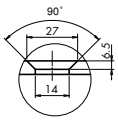

G2-hole

Bolt: M12
Bolt length limits
Outer link: 80mm
Inner link: 60mm

Chain No.		Avg. tensile strength kN (kgf)		Pitch	Standard attachments										
Chain size	Roller type	Standard **A,J**	Heavy duty **K,E**	P	A1・K1	A2・K2		A3・K3		SA2・SK2		GA2・GK2	G4		
					K	N	K	N	K	N	K	K	K	Y	B
DK 25200	**R,F,S,M**	245 (25,000)	392 (40,000)	200	—	120	80	—	—	—	—	70	100	80	125
DK 25250	**R,F,S,M**			250	—	170	125	—	—	—	—	110	140	80	125
DK 25300	**R,F,S,M**			300	—	220	180	—	—	—	—	150	—	—	—

Chain No.		Combination of standard attachments and rollers						Approx. weight kg/m				Attachment weight (kg/pc).				
Chain size	Roller type	A1 K1	A2 K2	A3 K3	SA2 SK2	GA2 GK2	G4	R-roller	F-roller	S-roller	M-roller	A2	A3	K2	K3	G4
DK 25200	**R,F,S,M**	—	R,F,S,M	—	—	R,F,S,M	R,F,S,M	18.2	19.5	11.4	11.9	0.63	—	1.26	—	1.05
DK 25250	**R,F,S,M**	—	R,F,S,M	—	—	R,F,S,M	R,F,S,M	15.9	17.0	10.6	11.0	0.90	—	1.80	—	1.32
DK 25300	**R,F,S,M**	—	R,F,S,M	—	—	R,F,S,M	—	14.5	15.3	9.9	10.3	1.16	—	2.32	—	—

Note: 1. The dimensions of the standard and heavy duty chains are the same, but heavy duty chains are made of high strength and structural steel, and are suitable when higher safety rate, strength or wear resistance is required.
2. With Attachment GA2 and GK2, check the bolt length limits shown above.

Dimensional Drawings: DK 32200, DK 32250, DK 32300 and DK 32450 (for Metric series)

R roller

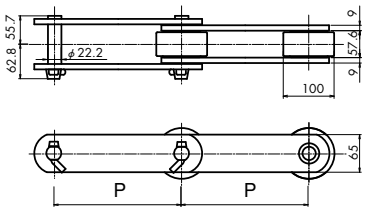

F roller

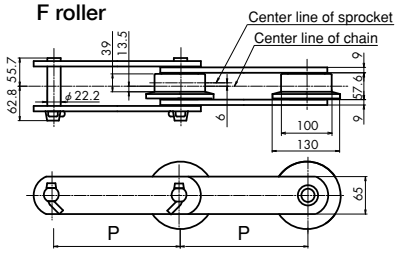

S roller

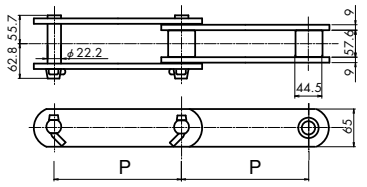

M roller

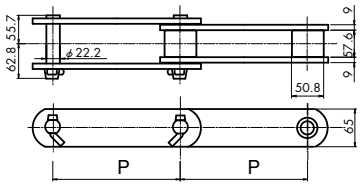

Attachment

A2

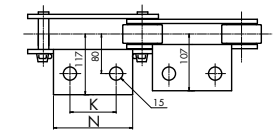

A3

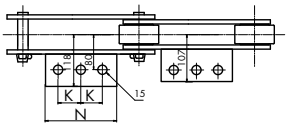

GA2

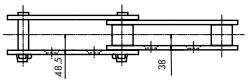

G4

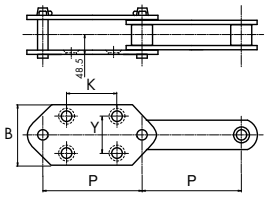

K2

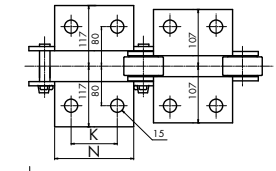

K3

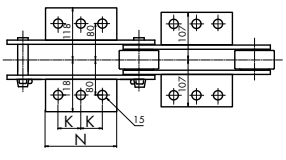

GK2

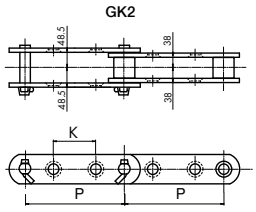

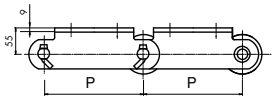

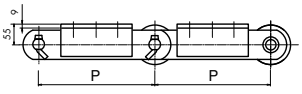

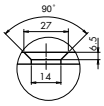

G2-hole

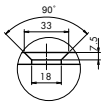

G4-hole
Bolt: M16

Bolt: M12
Bolt length limits
Outer link: 86mm
Inner link: 65mm

Chain No.		Avg. tensile strength kN (kgf)		Pitch	Standard attachments										
Chain size	Roller type	Standard **A,J**	Heavy duty **K,E**	P	A1・K1	A2・K2		A3・K3		SA2・SK2		GA2・GK2	G4		
					N	N	K	N	K	N	K	K	K	Y	B
DK 32200	**R,F,S,M**	313 (32,000)	500 (51,000)	200	—	120	80	—	—	—	—	70(40)	100	80	125
DK 32250	**R,F,S,M**			250	—	170	125	—	—	—	—	110(90)	140	100	150
DK 32300	**R,F,S,M**			300	—	220	180	—	—	—	—	140	170	100	150
DK 32450	**R,F,S,M**			450	—	330	280	330	140	—	—	220	—	—	—

Chain No.		Combination of standard attachments and rollers						Approx. weight kg/m				Attachment weight (kg/pc).				
Chain size	Roller type	A1 K1	A2 K2	A3 K3	SA2 SK2	GA2 GK2	G4	R-roller	F-roller	S-roller	M-roller	A2	A3	K2	K3	G4
DK 32200	**R,F,S,M**	—	R,F,S,M	—	—	R,F,S,M	R,F,S,M	28.2	30.2	15.5	16.4	0.72	—	1.44	—	0.91
DK 32250	**R,F,S,M**	—	R,F,S,M	—	—	R,F,S,M	R,F,S,M	24.6	26.2	14.4	15.2	1.01	—	2.02	—	1.48
DK 32300	**R,F,S,M**	—	R,F,S,M	—	—	R,F,S,M	R,F,S,M	22.0	23.4	13.6	14.2	1.31	—	2.62	—	1.78
DK 32450	**R,F,S,M**	—	R,F,S,M	R,F,S,M	—	R,F,S,M	—	17.8	18.7	11.9	12.1	—	1.97	—	3.97	—

Note: 1. The dimensions of the standard and heavy duty chains are the same, but heavy duty chains are made of high strength and structural steel, and are suitable when higher safety rate, strength or wear resistance is required.
2. K dimensions in ( ) for Attachment GA2 and GK2 are for Roller F.
3. With Attachment GA2 and GK2, check the bolt length limits shown above.
4. Attachment A3 and K3 are angle welding attachments.

Dimensional Drawings: DK 50250, DK 50300, DK 50450 and DK 50600 (for Metric series)

R roller

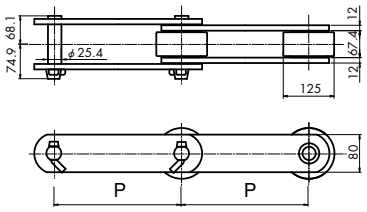

F roller

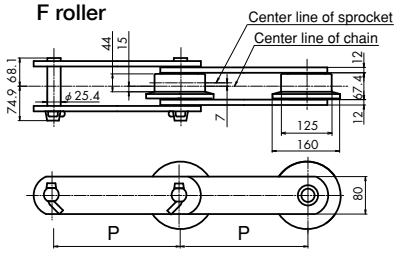

S roller

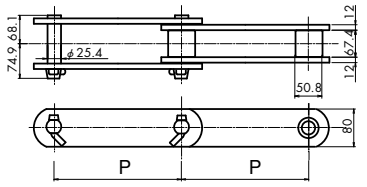

M roller

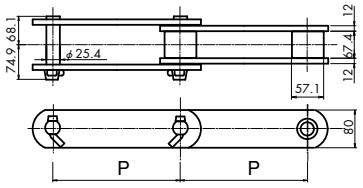

Attachment

A2

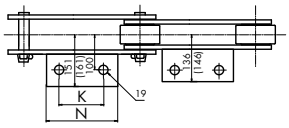

A3

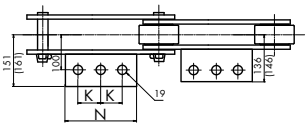

K2

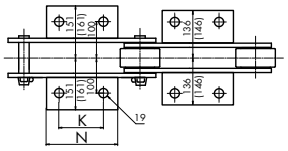

K3

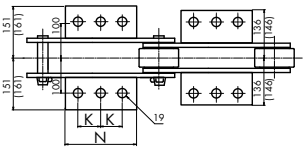

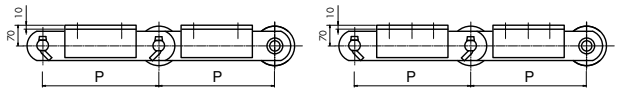

GA2

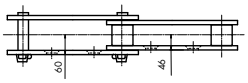

GK2

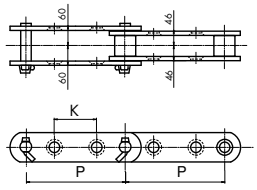

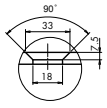

G2-hole

Bolt: M16
Bolt length limits
Outer link: 105mm
Inner link: 75mm

G4

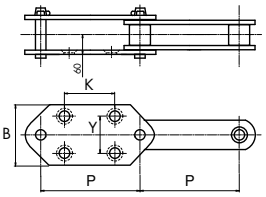

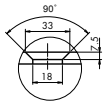

G4-hole
Bolt: M16

Chain No.		Avg. tensile strength kN (kgf)		Pitch	Standard attachments										
Chain size	Roller type	Standard A,J	Heavy duty K,E	P	A1・K1	A2・K2		A3・K3		SA2・SK2		GA2・GK2	G4		
					N	N	K	N	K	N	K	K	K	Y	B
DK 50250	**R,F,S,M**	490 (50,000)	686 (70,000)	250	—	170	125	—	—	—	—	90 (55)	140	100	150
DK 50300	**R,F,S,M**			300	—	220	180	—	—	—	—	140(105)	170	100	150
DK 50450	**R,F,S,M**			450	—	—	—	330	140	—	—	220	—	—	—
DK 50600	**R,F,S,M**			600	—	—	—	410	180	—	—	300	—	—	—

Chain No.		Combination of standard attachments and rollers						Approx. weight kg/m				Attachment weight (kg/pc).				
Chain size	Roller type	A1 K1	A2 K2	A3 K3	SA2 SK2	GA2 GK2	G4	R-roller	F-roller	S-roller	M-roller	A2	A3	K2	K3	G4
DK 50250	**R,F,S,M**	—	R,F,S,M	—	—	R,F,S,M	R,F,S,M	42.7	45.8	24.1	25.2	2.26	—	4.52	—	1.74
DK 50300	**R,F,S,M**	—	R,F,S,M	—	—	R,F,S,M	R,F,S,M	38.0	40.4	22.4	23.3	2.93	—	5.86	—	2.07
DK 50450	**R,F,S,M**	—	—	R,F,S,M	—	R,F,S,M	—	30.3	31.9	19.8	20.2	—	4.39	—	8.78	—
DK 50600	**R,F,S,M**	—	—	R,F,S,M	—	R,F,S,M	—	26.7	28.0	19.0	19.4	—	5.45	—	10.90	—

Note: 1. The dimensions of the standard and heavy duty chains are the same, but heavy duty chains are made of high strength and structural steel, and are suitable when higher safety rate, strength or wear resistance is required.
2. K dimensions in ( ) for Attachment GA2 and GK2 are for Roller F.
3. With Attachment GA2 and GK2, check the bolt length limits shown above.
4. Attachment A3 and K3 are angle welding attachments.

Dimensional Drawings: DK 65300 and DK 65450 (for Metric series)

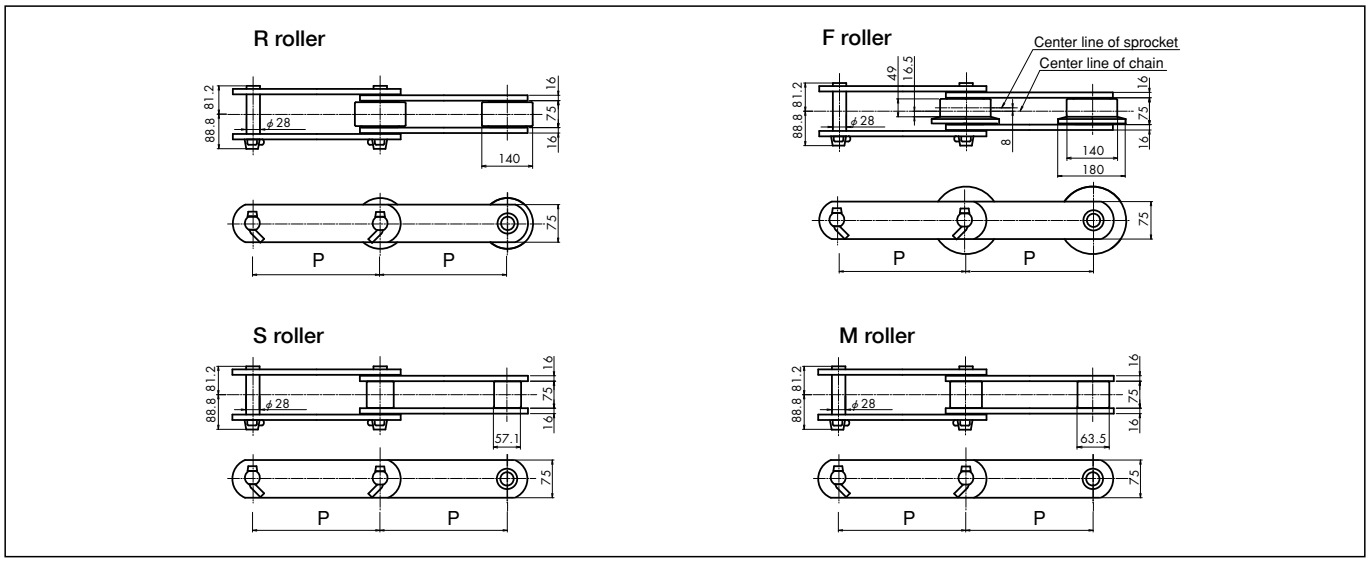

Attachment

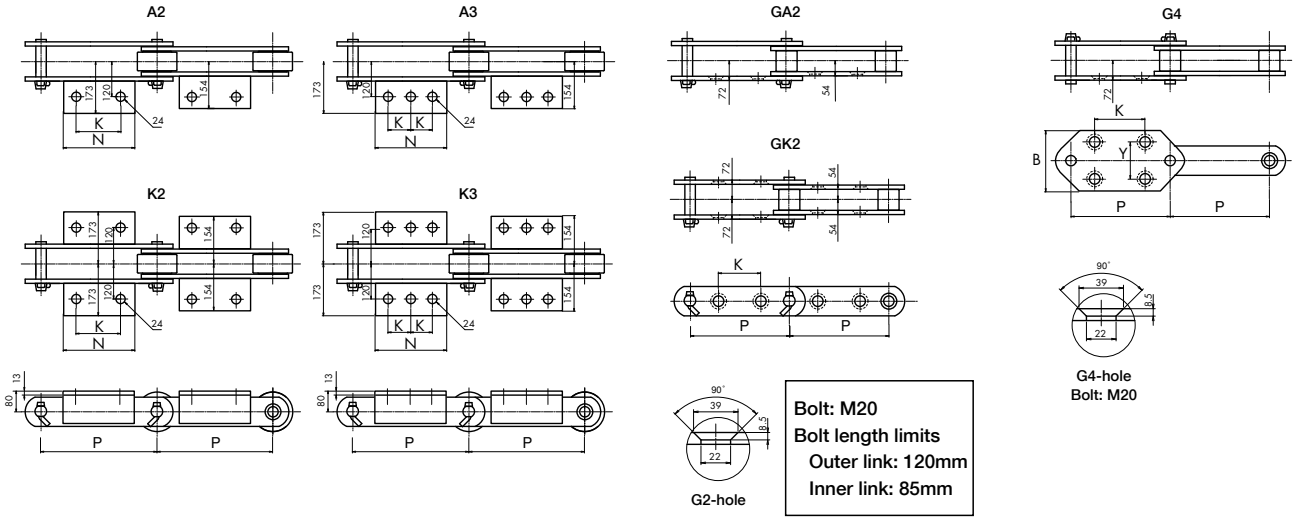

Bolt: M20
Bolt length limits
Outer link: 120mm
Inner link: 85mm

Chain No.		Avg. tensile strength kN (kgf)		Pitch	Standard attachments										
Chain size	Roller type	Standard **A,J**	Heavy duty **K,E**	P	A1・K1	A2・K2		A3・K3		SA2・SK2		GA2・GK2	G4		
					N	N	K	N	K	N	K	K	K	Y	B
DK 65300	**R,F,S,M**	637 (65,000)	882 (90,000)	300	—	180	130	—	—	—	—	120(80)	170	100	160
DK 65450	**R,F,S,M**			450	—	—	—	330	140	—	—	200	—	—	—

Chain No.		Combination of standard attachments and rollers						Approx. weight kg/m				Attachment weight (kg/pc).				
Chain size	Roller type	A1 K1	A2 K2	A3 K3	SA2 SK2	GA2 GK2	G4	R-roller	F-roller	S-roller	M-roller	A2	A3	K2	K3	G4
DK 65300	**R,F,S,M**	—	R,F,S,M	—	—	R,F,S,M	R,F,S,M	47.8	51.2	28.9	30.1	3.44	—	6.88	—	2.81
DK 65450	**R,F,S,M**	—	—	R,F,S,M	—	R,F,S,M	—	37.0	39.3	25.5	26.3	—	6.30	—	12.6	—

Note: 1. The dimensions of the standard and heavy duty chains are the same, but heavy duty chains are made of high strength and structural steel, and are suitable when higher safety rate, strength or wear resistance is required.
2. K dimensions in ( ) for Attachment GA2 and GK2 are for Roller F.
3. With Attachment GA2 and GK2, check the bolt length limits shown above.
4. Attachment A3 and K3 are angle welding attachments.

Dimensional Drawings: DK 05101 (for Inch series)

R roller

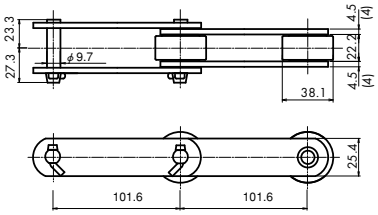

S roller

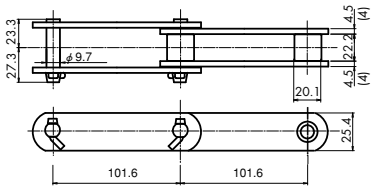

Attachment

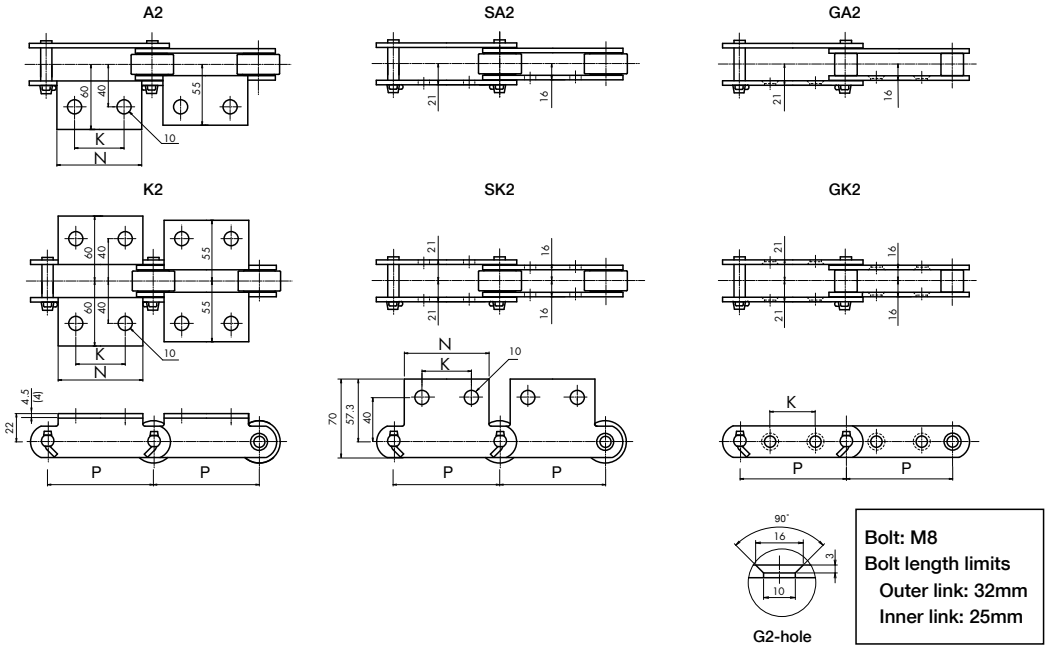

Chain No.		Avg. tensile strength kN (kgf)		Pitch	Standard attachments										
Chain size	Roller type	Standard **A,J**	Heavy duty **K,E**	P	A1・K1	A2・K2		A3・K3		SA2・SK2		GA2・GK2	G4		
					N	N	K	N	K	N	K	K	K	Y	B
DK 05101	**R,S**	53.9 (5,500)	98 (10,000)	101.6	—	70	40	—	—	70	40	45	—	—	—

Chain No.		Combination of standard attachments and rollers						Approx. weight kg/m				Attachment weight (kg/pc).				
Chain size	Roller type	A1 K1	A2 K2	A3 K3	SA2 SK2	GA2 GK2	G4	R-roller	F-roller	S-roller	M-roller	A2 SA2	A3	K2 SK2	K3	G4
DK 05101	**R,S**	—	R,S	—	R,S	R,S	—	4.1	—	2.9	—	0.12	—	0.24	—	—

Note: 1. Dimensions in ( ) for the plate thickness are for the stainless steel chains. Dimensions for plate thickness without ( ) apply to all types.
2. The dimensions of the standard and heavy duty chains are the same, but heavy duty chains are made of high strength and structural steel, and are suitable when higher safety rate, strength or wear resistance is required.
3. With Attachment GA2 and GK2, check the bolt length limits shown above.

Dimensional Drawings: DK 08066 and DK 08101 (for Inch series)

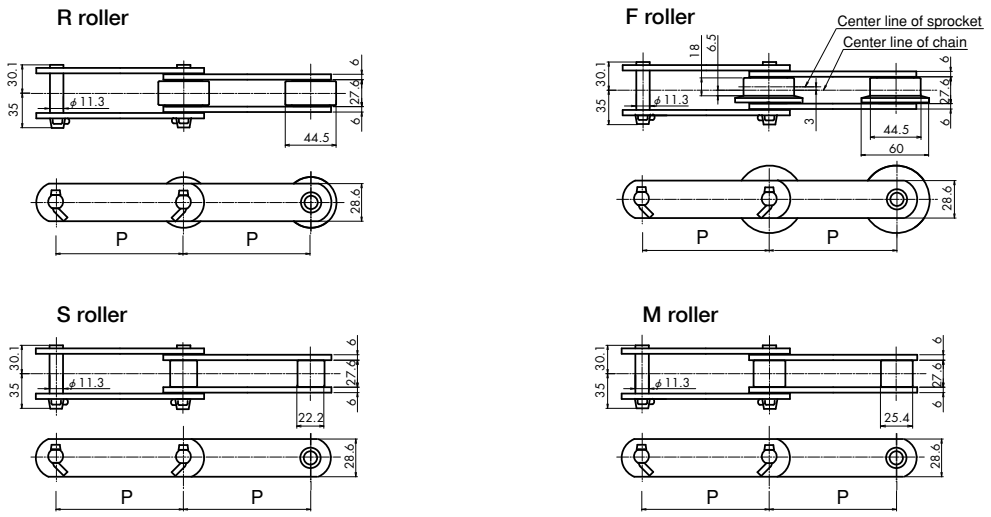

Attachment

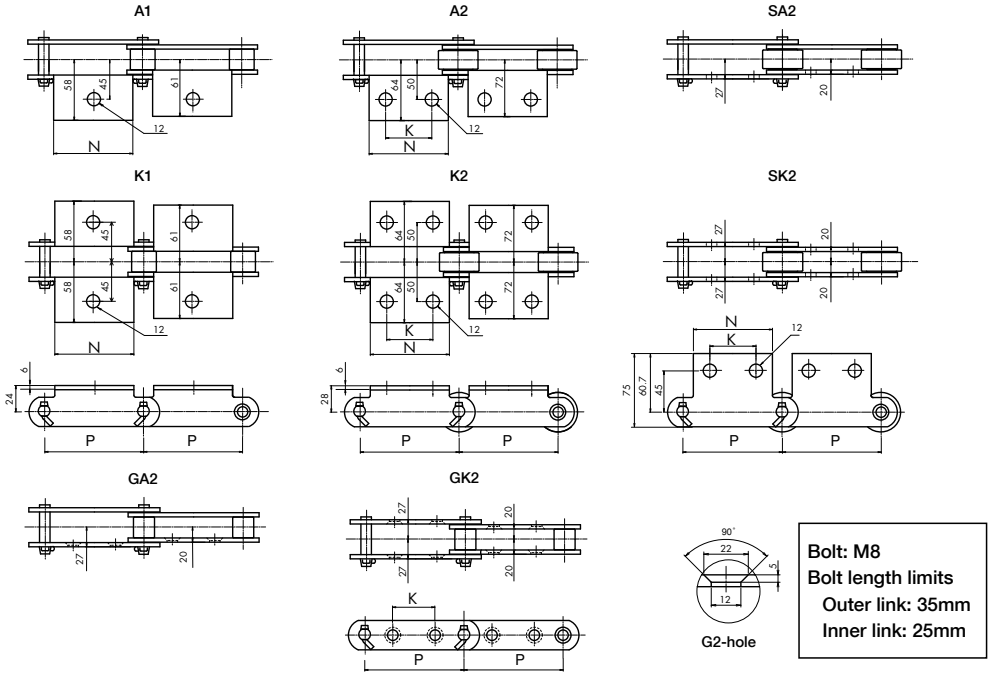

Chain No.		Avg. tensile strength kN (kgf)		Pitch	Standard attachments										
Chain size	Roller type	Standard A,J	Heavy duty K,E	P	A1・K1	A2・K2		A3・K3		SA2・SK2		GA2・GK2	G4		
					N	N	K	N	K	N	K	K	K	Y	B
DK 08066	**S,M**	78.4 (8,000)	142 (14,500)	66.27	35	—	—	—	—	—	—	—	—	—	—
DK 08101	**R,F,S,M**			101.6	—	70	40	—	—	70	40	35	—	—	—

Chain No.		Combination of standard attachments and rollers						Approx. weight kg/m				Attachment weight (kg/pc).				
Chain size	Roller type	A1 K1	A2 K2	A3 K3	SA2 SK2	GA2 GK2	G4	R-roller	F-roller	S-roller	M-roller	A1,A2 SA2	A3	K1,K2 SK2	K3	G4
DK 08066	**S,M**	S,M	—	—	—	—	—	—	—	5.3	5.8	0.08	—	0.16	—	—
DK 08101	**R,F,S,M**	—	R,F,S,M	—	R,F,S,M	R,F,S,M	—	6.9	7.3	4.5	5.1	0.20	—	0.40	—	—

Note: 1. The dimensions of the standard and heavy duty chains are the same, but heavy duty chains are made of high strength and structural steel, and are suitable when higher safety rate, strength or wear resistance is required.
2. With Attachment GA2 and GK2, check the bolt length limits shown above.

Dimensional Drawings: DK 09101 (for Inch series)

R roller

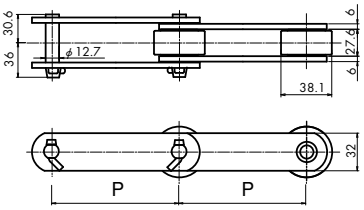

S roller

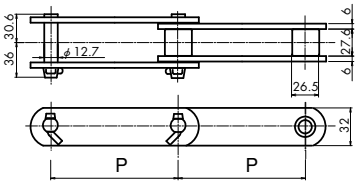

M roller

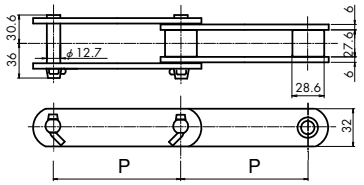

Attachment

A2

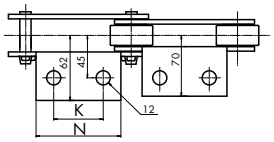

GA2

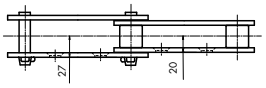

K2

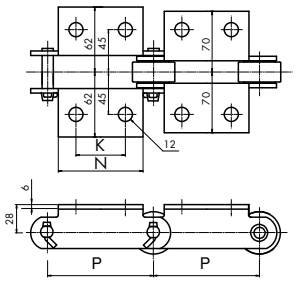

GK2

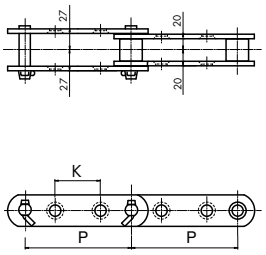

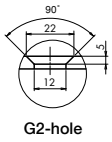

G2-hole

Bolt: M10
Bolt length limits
Outer link: 43mm
Inner link: 30mm

Chain No.		Avg. tensile strength kN (kgf)		Pitch	Standard attachments										
Chain size	Roller type	Standard **A,J**	Heavy duty **K,E**	P	A1・K1	A2・K2		A3・K3		SA2・SK2		GA2・GK2	G4		
					N	N	K	N	K	N	K	K	K	Y	B
DK 09101	**R,S,M**	88.2 (9,000)	156 (16,000)	101.6	—	70	40	—	—	—	—	40	—	—	—

Chain No.		Combination of standard attachments and rollers						Approx. weight kg/m				Attachment weight (kg/pc).				
Chain size	Roller type	A1 K1	A2 K2	A3 K3	SA2 SK2	GA2 GK2	G4	R-roller	F-roller	S-roller	M-roller	A2	A3	K2	K3	G4
DK 09101	**R,S,M**	—	R,S,M	—	—	R,S,M	—	6.4	—	5.4	5.7	0.19	—	0.38	—	—

Note: 1. The dimensions of the standard and heavy duty chains are the same, but heavy duty chains are made of high strength and structural steel, and are suitable when higher safety rate, strength or wear resistance is required.
2. With Attachment GA2 and GK2, check the bolt length limits shown above.

Dimensional Drawings: DK 11152 (for Inch series)

R roller

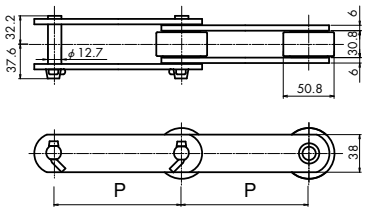

F roller

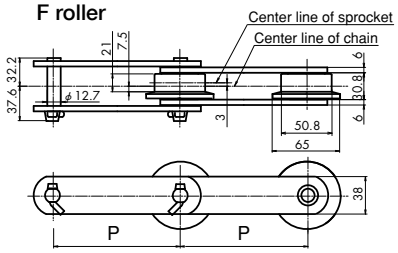

S roller

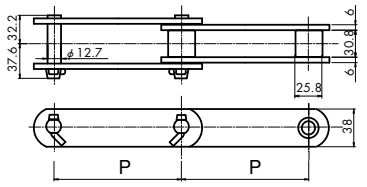

M roller

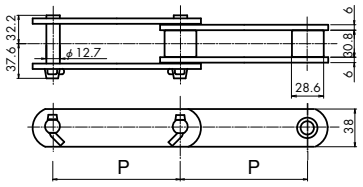

Attachment

A2

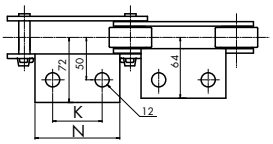

SA2

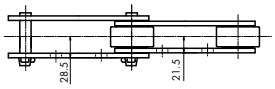

GA2

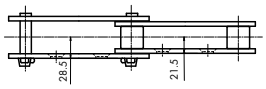

G4

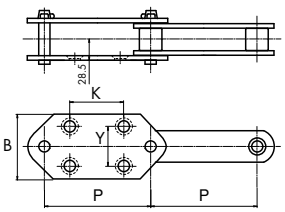

K2

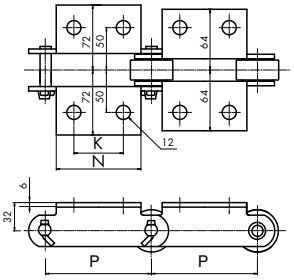

SK2

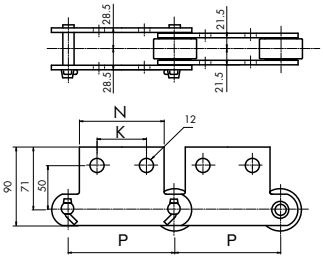

GK2

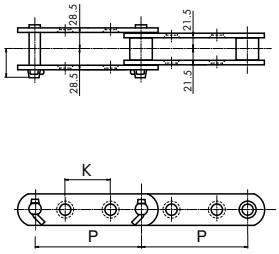

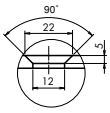

G4-hole
Bolt: M10

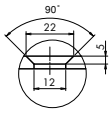

G2-hole

Bolt: M10
Bolt length limits
Outer link: 49mm
Inner link: 35mm

Chain No.		Avg. tensile strength kN (kgf)		Pitch	Standard attachments										
Chain size	Roller type	Standard A,J	Heavy duty K,E	P	A1・K1	A2・K2		A3・K3		SA2・SK2		GA2・GK2	G4		
					N	N	K	N	K	N	K	K	K	Y	B
DK 11152	**R,F,S,M**	112 (11,500)	171 (17,500)	152.4	—	90	60	—	—	—	—	60	75	70	110

Chain No.		Combination of standard attachments and rollers						Approx. weight kg/m				Attachment weight (kg/pc).				
Chain size	Roller type	A1 K1	A2 K2	A3 K3	SA2 SK2	GA2 GK2	G4	R-roller	F-roller	S-roller	M-roller	A2	A3	K2	K3	G4
DK 11152	**R,F,S,M**	—	R,F,S,M	—	R,S,M	R,F,S,M	—	7.4	7.9	5.5	5.8	0.22	—	0.44	—	—

Note: 1. The dimensions of the standard and heavy duty chains are the same, but heavy duty chains are made of high strength and structural steel, and are suitable when higher safety rate, strength or wear resistance is required.
2. With Attachment GA2 and GK2, check the bolt length limits shown above.

Dimensional Drawings: DK 13101 (for Inch series)

R roller

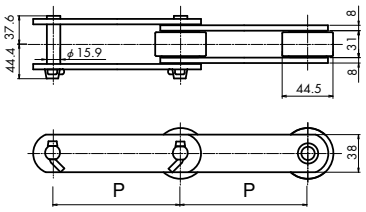

S roller

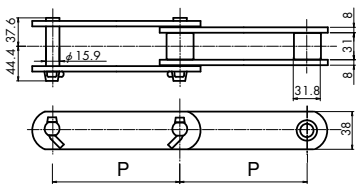

M roller

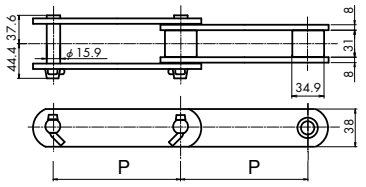

Attachment

A2

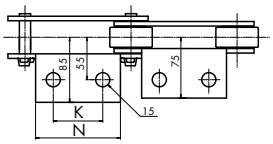

SA2

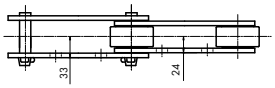

K2

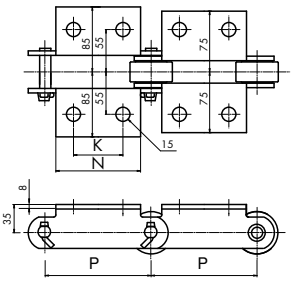

SK2

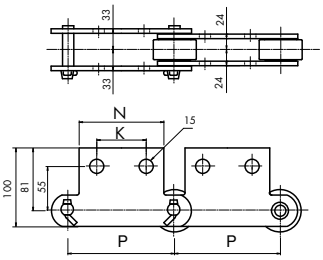

Chain No.		Avg. tensile strength kN (kgf)		Pitch	Standard attachments										
Chain size	Roller type	Standard **A,J**	Heavy duty **K,E**	P	A1・K1	A2・K2		A3・K3		SA2・SK2		GA2・GK2	G4		
					N	N	K	N	K	N	K	K	K	Y	B
DK 13101	**R,S,M**	127 (13,000)	240 (24,500)	101.6	—	80	40	—	—	80	40	—	—	—	—

Chain No.		Combination of standard attachments and rollers						Approx. weight kg/m				Attachment weight (kg/pc).				
Chain size	Roller type	A1 K1	A2 K2	A3 K3	SA2 SK2	GA2 GK2	G4	R-roller	F-roller	S-roller	M-roller	A2 SA2	A3	K2 SK2	K3	G4
DK 13101	**R,S,M**	—	R,S,M	—	R,S,M	—	—	10.3	—	9.6	10.0	0.31	—	0.62	—	—

Note: The dimensions of the standard and heavy duty chains are the same, but heavy duty chains are made of high strength and structural steel, and are suitable when higher safety rate, strength or wear resistance is required.

Dimensional Drawings: DK 19152 (for Inch series)

R roller

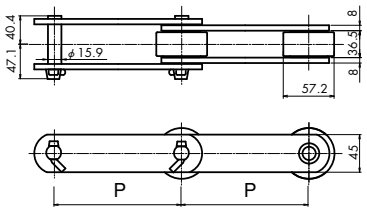

F roller

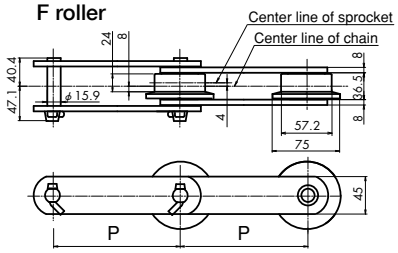

S roller

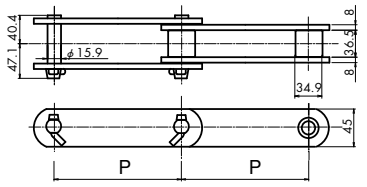

M roller

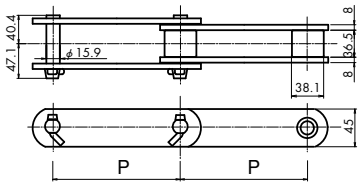

Attachment

A2

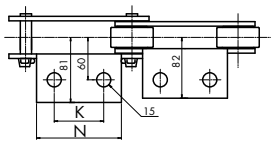

GA2

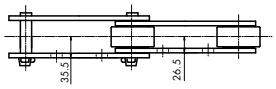

GA2

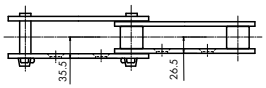

G4

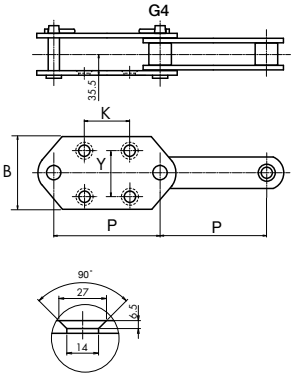

G4-hole
Bolt: M12

K2

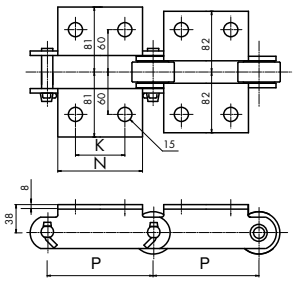

SK2

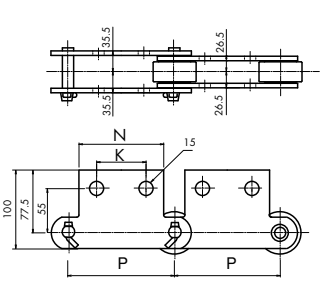

GK2

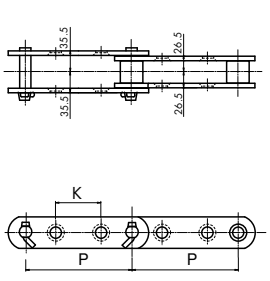

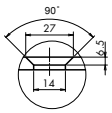

G2-hole

Bolt: M12
Bolt length limits
Outer link: 63mm
Inner link: 45mm

Chain No.		Avg. tensile strength kN (kgf)		Pitch	Standard attachments										
Chain size	Roller type	Standard **A,J**	Heavy duty **K,E**	P	A1・K1	A2・K2		A3・K3		SA2・SK2		GA2・GK2	G4		
					N	N	K	N	K	N	K	K	K	Y	B
DK 19152	**R,F,S,M**	186 (19,000)	279 (28,500)	152.4	—	100	60	—	—	100	60	50	75	70	110

Chain No.		Combination of standard attachments and rollers						Approx. weight kg/m				Attachment weight (kg/pc).				
Chain size	Roller type	A1 K1	A2 K2	A3 K3	SA2 SK2	GA2 GK2	G4	R-roller	F-roller	S-roller	M-roller	A2 SA2	A3	K2 SK2	K3	G4
DK 19152	**R,F,S,M**	—	R,F,S,M	—	R,S,M	R,F,S,M	—	11.8	12.2	9.1	9.4	0.41	—	0.82	—	0.60

Note: 1. The dimensions of the standard and heavy duty chains are the same, but heavy duty chains are made of high strength and structural steel, and are suitable when higher safety rate, strength or wear resistance is required.
2. With Attachment GA2 and GK2, check the bolt length limits shown above.

Dimensional Drawings: DK 25152 (for Inch series)

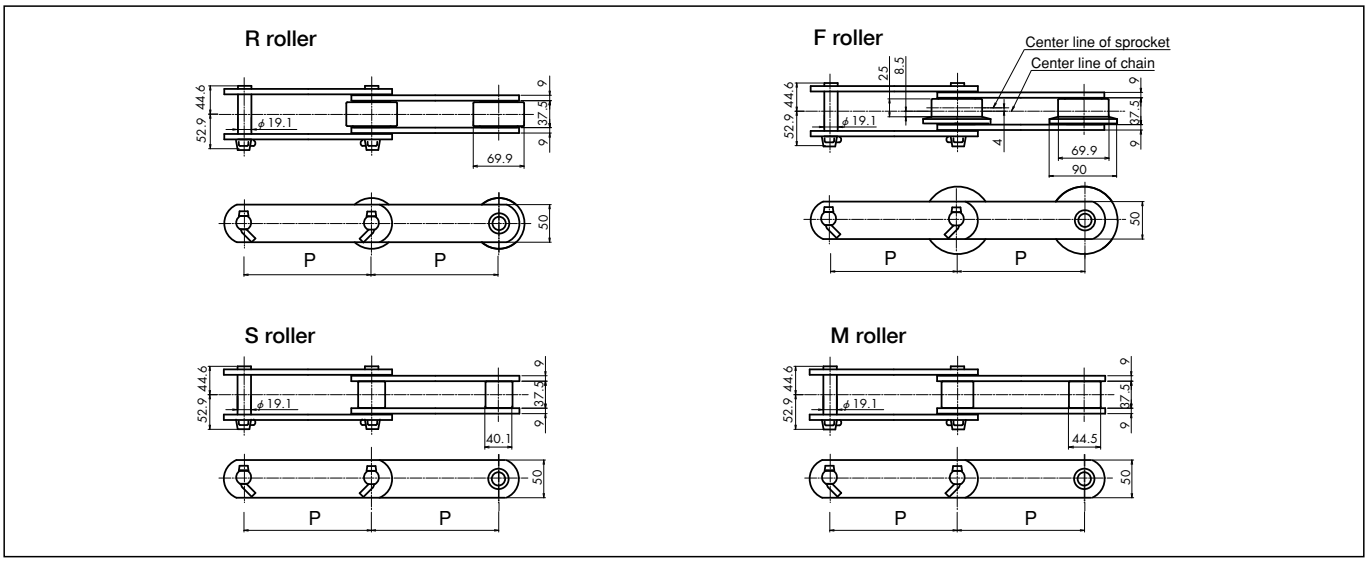

Attachment

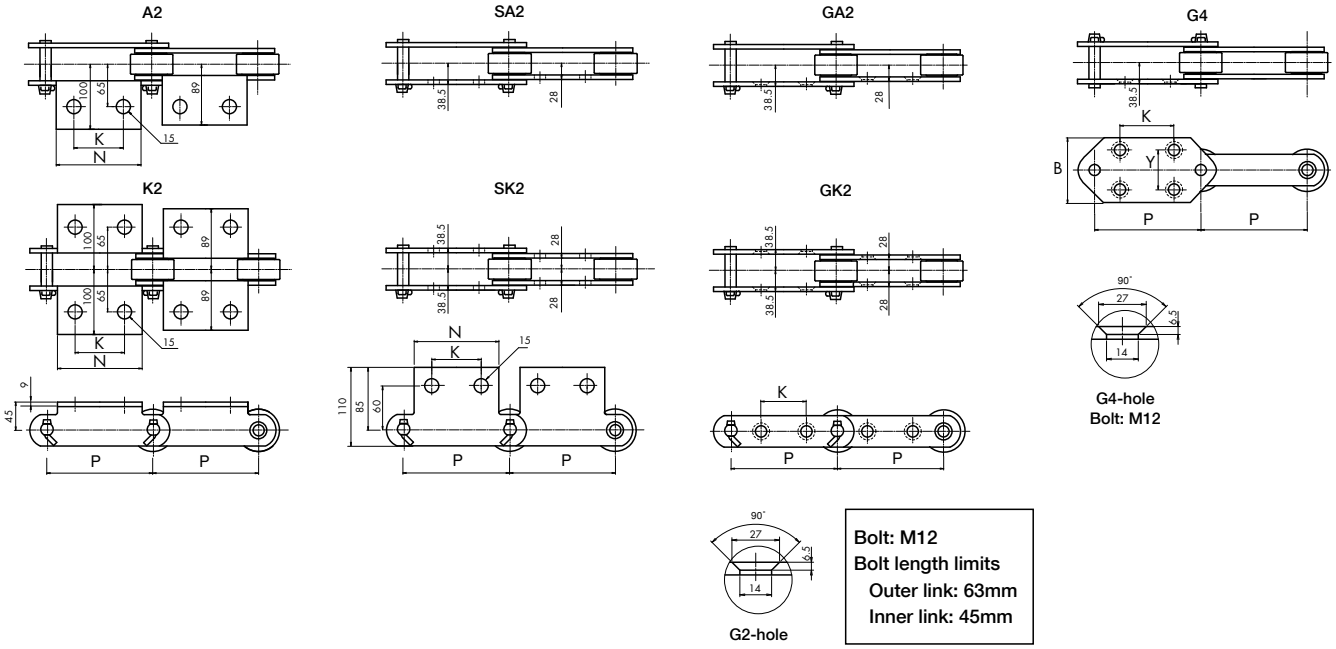

Chain No.		Avg. tensile strength kN (kgf)		Pitch	Standard attachments										
Chain size	Roller type	Standard **A,J**	Heavy duty **K,E**	P	A1・K1	A2・K2		A3・K3		SA2・SK2		GA2・GK2	G4		
					N	N	K	N	K	N	K	K	K	Y	B
DK 25152	**R,F,S,M**	245 (25,000)	392 (40,000)	152.4	—	100	60	—	—	100	60	55(35)	75	70	125

Chain No.		Combination of standard attachments and rollers						Approx. weight kg/m				Attachment weight (kg/pc).				
Chain size	Roller type	A1 K1	A2 K2	A3 K3	SA2 SK2	GA2 GK2	G4	R-roller	F-roller	S-roller	M-roller	A2 SA2	A3	K2 SK2	K3	G4
DK 25152	**R,F,S,M**	—	R,F,S,M	—	R,S,M	R,F,S,M	—	16.4	17.3	12.0	12.6	0.53	—	1.06	—	0.79

Note: 1. The dimensions of the standard and heavy duty chains are the same, but heavy duty chains are made of high strength and structural steel, and are suitable when higher safety rate, strength or wear resistance is required.
2. K dimensions in ( ) for Attachment GA2 and GK2 are for Roller F.
3. With Attachment GA2 and GK2, check the bolt length limits shown above.

Anti-seizing Roller Conveyor Chain

This chain has a larger clearance between the bushing outer diameter and roller inner diameter compared to that of standard conveyor chains to prevent interference with chain rotation even when various loads enter into the roller bearing.

- ○ The chain is identical to Standard Conveyor Chains with Roller R and Roller F.
- ○ Sprockets for Standard Conveyor Chains can be used.
- ○ Dimensions for attachments are also identical to those of Standard Conveyor Chains.

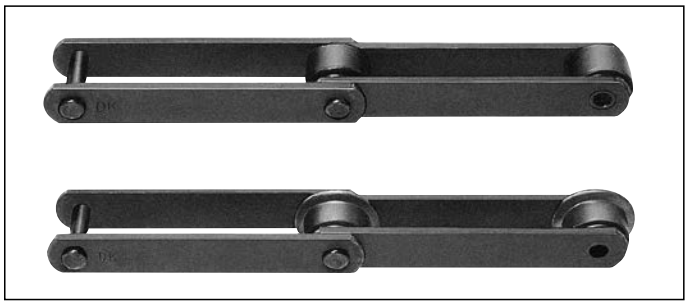

Application examples

- ○ Apron conveyors and scraper conveyors for industrial waste of recycling centers and for refuse incineration ash and wet refuse of waste disposal facilities

- ○ Circumstances where smooth rotation is inhibited by fixing of loads.



Table of applicable attachments

Chain No.	Roller	Standard attachment												
		A1	A2	A3	K1	K2	K3	SA1	SA2	SK1	SK2	GA2	GK2	G4
DK 03075	**UR,UF**	×	○	×	×	○	×	×	○	×	○	×	×	×
DK 03100	**UR,UF**	×	○	×	×	○	×	×	○	×	○	○	○	×
DK 03125	**UR,UF**	×	○	×	×	○	×	×	×	×	×	○	○	×
DK 03150	**UR,UF**	×	○	×	×	○	×	×	×	×	×	○	○	×
DK 07075	**UR,UF**	×	○	×	×	○	×	×	×	×	×	×	×	×
DK 07100	**UR,UF**	×	○	×	×	○	×	×	○	×	○	○	○	×
DK 07125	**UR,UF**	×	○	×	×	○	×	×	×	×	×	○	○	×
DK 07150	**UR,UF**	×	○	×	×	○	×	×	○	×	○	○	○	×
DK 09100	**UR,UF**	×	○	×	×	○	×	×	×	×	×	○	○	×
DK 09125	**UR,UF**	×	○	×	×	○	×	×	×	×	×	○	○	×
DK 09150	**UR,UF**	×	○	×	×	○	×	×	○	×	○	○	○	×
DK 09200	**UR,UF**	×	○	×	×	○	×	×	×	×	×	○	○	×
DK 11100	**UR,UF**	×	○	×	×	○	×	×	○	×	○	○	○	×
DK 11125	**UR,UF**	×	○	×	×	○	×	×	×	×	×	○	○	×
DK 11150	**UR,UF**	×	○	×	×	○	×	×	○	×	○	○	○	×
DK 11200	**UR,UF**	×	○	×	×	○	×	×	×	×	×	○	○	×
DK 13150	**UR,UF**	×	○	×	×	○	×	×	×	×	×	○	○	×
DK 13200	**UR,UF**	×	○	×	×	○	×	×	×	×	×	○	○	×
DK 19200	**UR,UF**	×	○	×	×	○	×	×	○	×	○	○	○	○
DK 19250	**UR,UF**	×	○	×	×	○	×	×	○	×	○	○	○	○
DK 19300	**UR,UF**	×	○	×	×	○	×	×	×	×	×	○	○	×
DK 25200	**UR,UF**	×	○	×	×	○	×	×	×	×	×	○	○	○
DK 25250	**UR,UF**	×	○	×	×	○	×	×	×	×	×	○	○	○
DK 25300	**UR,UF**	×	○	×	×	○	×	×	×	×	×	○	○	×
DK 32200	**UR,UF**	×	○	×	×	○	×	×	×	×	×	○	○	○
DK 32250	**UR,UF**	×	○	×	×	○	×	×	×	×	×	○	○	○
DK 32300	**UR,UF**	×	○	×	×	○	×	×	×	×	×	○	○	○
DK 32450	**UR,UF**	×	○	○	×	○	○	×	×	×	×	○	○	×
DK 50250	**UR,UF**	×	○	×	×	○	×	×	×	×	×	○	○	○
DK 50300	**UR,UF**	×	○	×	×	○	×	×	×	×	×	○	○	○
DK 50450	**UR,UF**	×	×	○	×	×	○	×	×	×	×	○	○	×
DK 50600	**UR,UF**	×	×	○	×	×	○	×	×	×	×	○	○	×
DK 65300	**UR,UF**	×	○	×	×	○	×	×	×	×	×	○	○	○
DK 65450	**UR,UF**	×	×	○	×	×	○	×	×	×	×	○	○	×
DK 05101	**UR**	×	○	×	×	○	×	×	○	×	○	○	○	×
DK 08101	**UR,UF**	×	○	×	×	○	×	×	○	×	○	○	○	×
DK 09101	**UR**	×	○	×	×	○	×	×	×	×	×	○	○	×
DK 11152	**UR,UF**	×	○	×	×	○	×	×	○	×	○	○	○	○
DK 13101	**UR**	×	○	×	×	○	×	×	○	×	○	×	×	×
DK 19152	**UR,UF**	×	○	×	×	○	×	×	○	×	○	○	○	○
DK 25152	**UR,UF**	×	○	×	×	○	×	×	○	×	○	○	○	○

○ : Standard product × : Nonstandard product
Note: Consult us for manufacturing nonstandard products.

Dimensional Drawings: DK 03075, DK 03100, DK 03125 and DK 03150 (for Metric series)

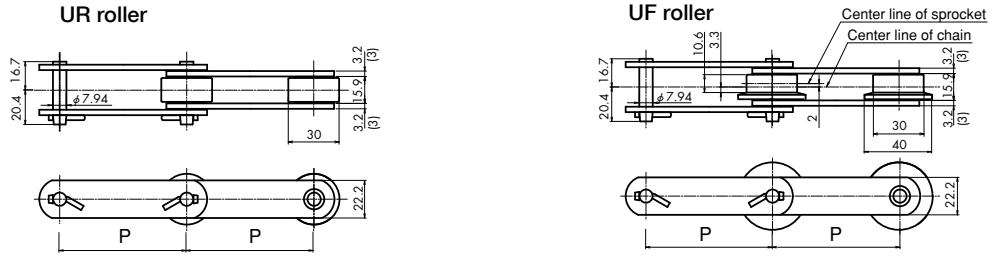

Attachment

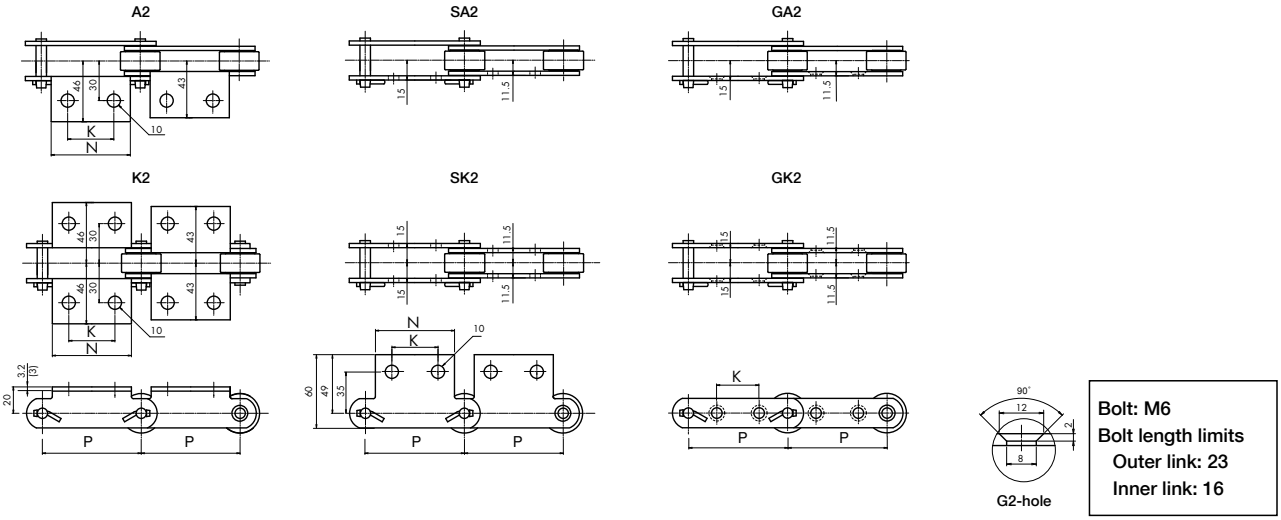

Chain No.		Avg. tensile strength kN (kgf)		Pitch	Standard attachments										
Chain size	Roller type	Standard **A,J**	Heavy duty **K,E**	P	A1・K1	A2・K2		A3・K3		SA2・SK2		GA2・GK2	G4		
					N	N	K	N	K	N	K	K	K	Y	B
DK 03075	**UR,UF**	34.3 (3,500)	69.6 (7,100)	75	—	60	35	—	—	60	35	—	—	—	—
DK 03100	**UR,UF**			100	—	65	40	—	—	65	40	40	—	—	—
DK 03125	**UR,UF**			125	—	75	50	—	—	—	—	50	—	—	—
DK 03150	**UR,UF**			150	—	85	60	—	—	—	—	60	—	—	—

Chain No.		Combination of standard attachments and rollers						Approx. weight kg/m		Attachment weight (kg/pc).				
Chain size	Roller type	A1 K1	A2 K2	A3 K3	SA2 SK2	GA2 GK2	G4	UR-roller	UF-roller	A2 SA2	A3	K2 SK2	K3	G4
DK 03075	**UR,UF**	—	UR,UF	—	UR	—	—	2.6	2.8	0.05	—	0.10	—	—
DK 03100	**UR,UF**	—	UR,UF	—	UR	UR,UF	—	2.2	2.4	0.06	—	0.12	—	—
DK 03125	**UR,UF**	—	UR,UF	—	—	UR,UF	—	2.0	2.1	0.07	—	0.14	—	—
DK 03150	**UR,UF**	—	UR,UF	—	—	UR,UF	—	1.8	1.8	0.08	—	0.16	—	—

Note: 1. Dimensions in ( ) for the plate thickness are for the stainless steel chains. Dimensions for plate thickness without ( ) apply to all types.
2. The dimensions of the standard and heavy duty chains are the same, but heavy duty chains are made of high strength and structural steel, and are suitable when higher safety rate, strength or wear resistance is required.
3. With Attachment GA2 and GK2, check the bolt length limits shown above.

Dimensional Drawings: DK 07075, DK 07100, DK 07125 and DK 07150 (for Metric series)

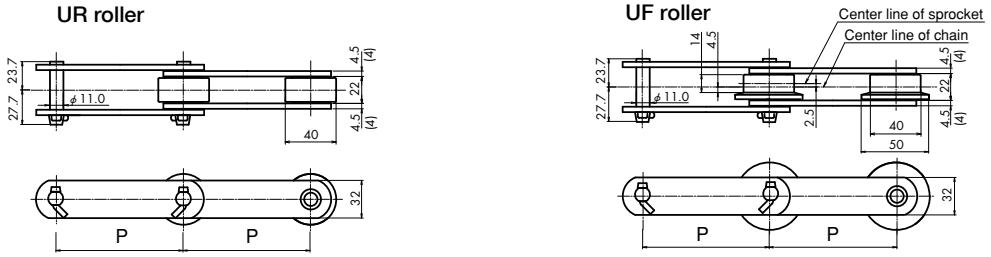

Attachment

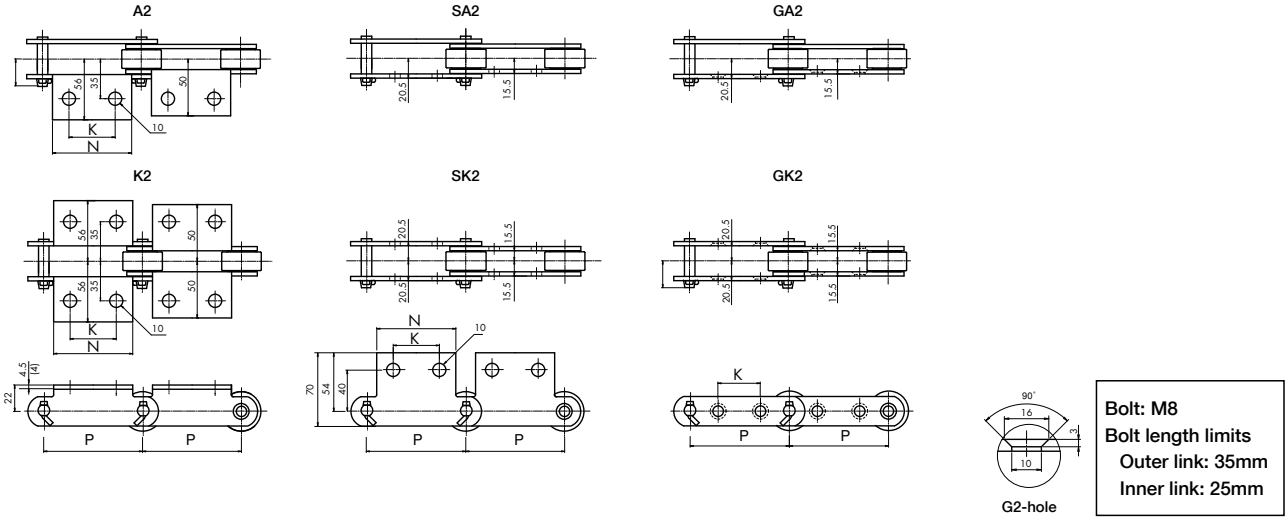

Chain No.		Avg. tensile strength kN (kgf)		Pitch	Standard attachments										
Chain size	Roller type	Standard A,J	Heavy duty K,E	P	A1・K1	A2・K2		A3・K3		SA2・SK2		GA2・GK2	G4		
					K	N	K	N	K	N	K	K	K	Y	B
DK 07075	**UR,UF**	68.6 (7,000)	132 (13,500)	75	—	60	35	—	—	—	—	—	—	—	—
DK 07100	**UR,UF**			100	—	65	40	—	—	65	40	40(34)	—	—	—
DK 07125	**UR,UF**			125	—	75	50	—	—	—	—	50	—	—	—
DK 07150	**UR,UF**			150	—	85	60	—	—	**85**	**60**	60	—	—	—

Chain No.		Combination of standard attachments and rollers						Approx. weight kg/m		Attachment weight (kg/pc).				
Chain size	Roller type	A1 K1	A2 K2	A3 K3	SA2 SK2	GA2 GK2	G4	UR-roller	UF-roller	A2 SA2	A3	K2 SK2	K3	G4
DK 07075	**UR,UF**	—	UR,UF	—	—	—	—	5.6	5.9	0.09	—	0.18	—	—
DK 07100	**UR,UF**	—	UR,UF	—	UR	UR,UF	—	5.0	5.2	0.10	—	0.20	—	—
DK 07125	**UR,UF**	—	UR,UF	—	—	UR,UF	—	4.6	4.8	0.12	—	0.24	—	—
DK 07150	**UR,UF**	—	UR,UF	—	UR	UR,UF	—	4.2	4.4	0.13	—	0.26	—	—

Note: 1. in ( ) for the plate thickness are for the stainless steel chains. Dimensions for plate thickness without ( ) apply to all types.
2. The dimensions of the standard and heavy duty chains are the same, but heavy duty chains are made of high strength and structural steel, and are suitable when higher safety rate, strength or wear resistance is required.
3. K dimensions in ( ) for Attachment GA2 and GK2 are for Roller UF.
4. With Attachment GA2 and GK2, check the bolt length limits shown above.

Dimensional Drawings: DK 09100, DK 09125, DK 09150 and DK 09200 (for Metric series)

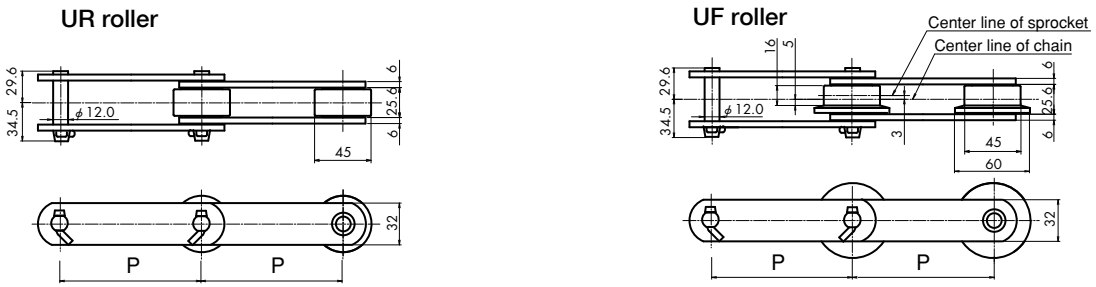

Attachment

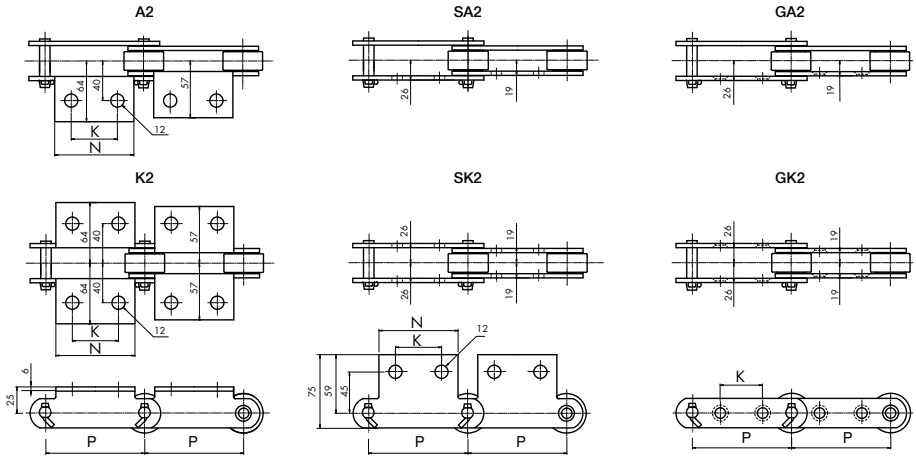

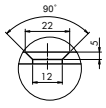

Bolt: M10
Bolt length limits
Outer link: 43mm
Inner link: 30mm

Chain No.		Avg. tensile strength kN (kgf)		Pitch	Standard attachments										
Chain size	Roller type	Standard A,J	Heavy duty K,E	P	A1・K1	A2・K2		A3・K3		SA2・SK2		GA2・GK2	G4		
					N	N	K	N	K	N	K	K	K	Y	B
DK 09100	**UR,UF**	88.2 (9,000)	156 (16,000)	100	—	70	40	—	—	—	—	35	—	—	—
DK 09125	**UR,UF**			125	—	80	50	—	—	—	—	45	—	—	—
DK 09150	**UR,UF**			150	—	90	60	—	—	90	60	60	—	—	—
DK 09200	**UR,UF**			200	—	110	80	—	—	—	—	80	—	—	—

Chain No.		Combination of standard attachments and rollers						Approx. weight kg/m		Attachment weight (kg/pc).				
Chain size	Roller type	A1 K1	A2 K2	A3 K3	SA2 SK2	GA2 GK2	G4	UR-roller	UF-roller	A2 SA2	A3	K2 SK2	K3	G4
DK 09100	**UR,UF**	—	UR,UF	—	—	—	—	7.1	7.4	0.16	—	0.32	—	—
DK 09125	**UR,UF**	—	UR,UF	—	—	UR,UF	—	6.4	6.6	0.18	—	0.36	—	—
DK 09150	**UR,UF**	—	UR,UF	—	UR	UR,UF	—	5.8	6.0	0.20	—	0.40	—	—
DK 09200	**UR,UF**	—	UR,UF	—	—	UR,UF	—	5.1	5.3	0.22	—	0.44	—	—

Note: 1. The dimensions of the standard and heavy duty chains are the same, but heavy duty chains are made of high strength and structural steel, and are suitable when higher safety rate, strength or wear resistance is required.
2. With Attachment GA2 and GK2, check the bolt length limits shown above.

Dimensional Drawings: DK 11100, DK 11125, DK 11150 and DK 11200 (for Metric series)

UR roller

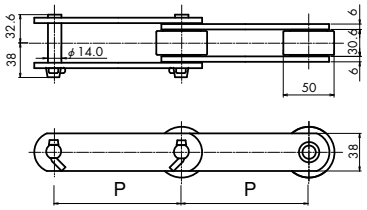

UF roller

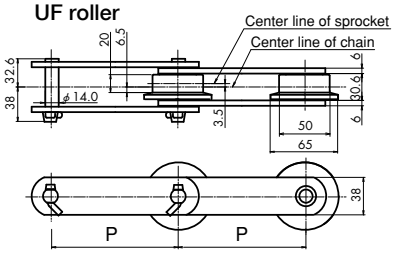

Attachment

A2

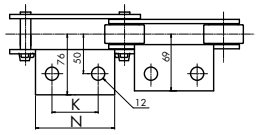

SA2

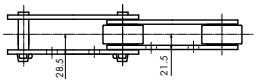

GA2

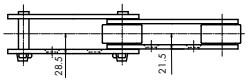

K2

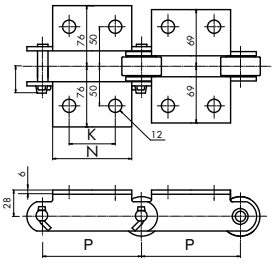

SK2

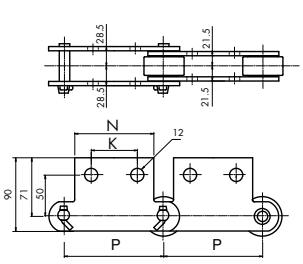

GK2

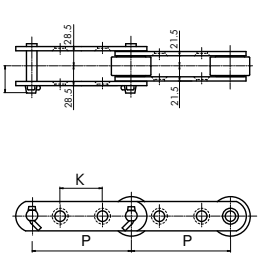

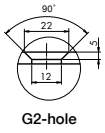

G2-hole

Bolt: M10
Bolt length limits
Outer link: 49mm
Inner link: 35mm

Chain No.		Avg. tensile strength kN (kgf)		Pitch	Standard attachments										
Chain size	Roller type	Standard A,J	Heavy duty K,E	P	A1・K1	A2・K2		A3・K3		SA2・SK2		GA2・GK2	G4		
					N	N	K	N	K	N	K	K	K	Y	B
DK 11100	**UR,UF**	112 (11,500)	225 (23,000)	100	—	70	40	—	—	70	40	35	—	—	—
DK 11125	**UR,UF**			125	—	80	50	—	—	—	—	35	—	—	—
DK 11150	**UR,UF**			150	—	90	60	—	—	90	60	60	—	—	—
DK 11200	**UR,UF**			200	—	110	80	—	—	—	—	80	—	—	—

Chain No.		Combination of standard attachments and rollers						Approx. weight kg/m		Attachment weight (kg/pc).				
Chain size	Roller type	A1 K1	A2 K2	A3 K3	SA2 SK2	GA2 GK2	G4	UR-roller	UF-roller	A2 SA2	A3	K2 SK2	K3	G4
DK 11100	**UR,UF**	—	UR,UF	—	UR	—	—	9.6	10.1	0.19	—	0.39	—	—
DK 11125	**UR,UF**	—	UR,UF	—	—	UR,UF	—	8.5	8.9	0.21	—	0.42	—	—
DK 11150	**UR,UF**	—	UR,UF	—	UR	UR,UF	—	7.6	7.9	0.24	—	0.48	—	—
DK 11200	**UR,UF**	—	UR,UF	—	—	UR,UF	—	6.5	6.8	0.29	—	0.58	—	—

Note: 1. The dimensions of the standard and heavy duty chains are the same, but heavy duty chains are made of high strength and structural steel, and are suitable when higher safety rate, strength or wear resistance is required.
2. With Attachment GA2 and GK2, check the bolt length limits shown above.

Dimensional Drawings: DK 13150 and DK 13200 (for Metric series)

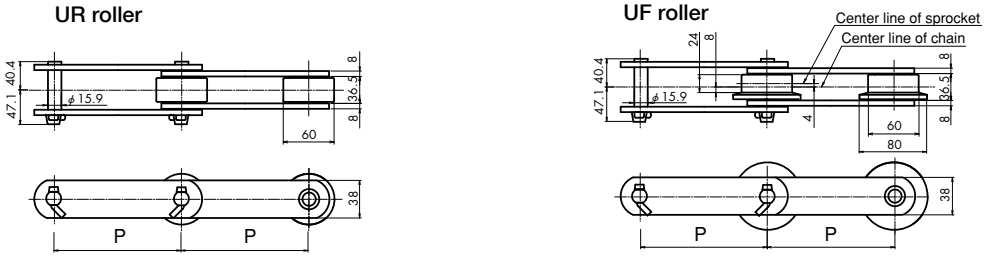

Attachment

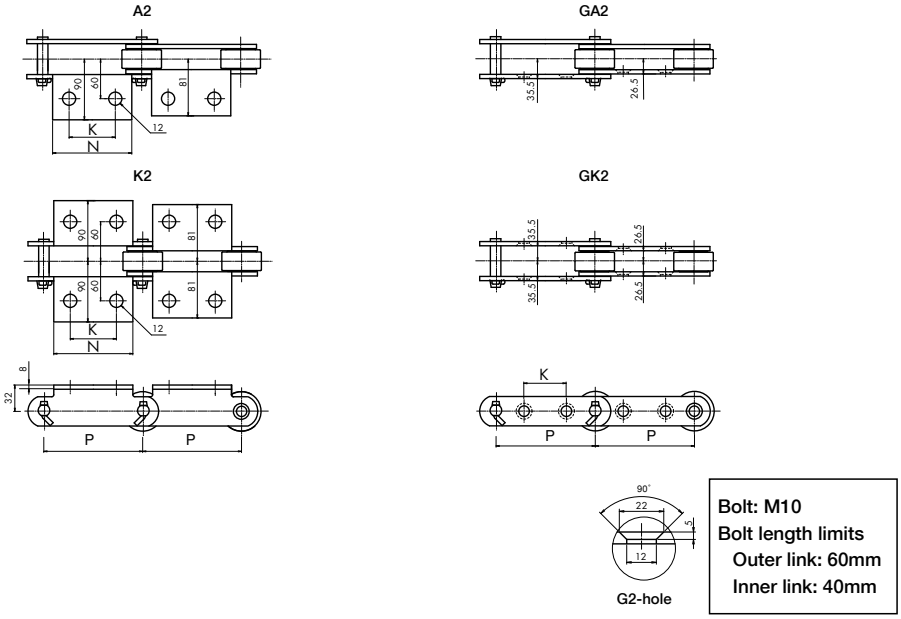

Bolt: M10
Bolt length limits
Outer link: 60mm
Inner link: 40mm

Chain No.		Avg. tensile strength kN (kgf)		Pitch	Standard attachments											
Chain size	Roller type	Standard A,J	Heavy duty K,E	P	A1・K1	A2・K2		A3・K3		SA2・SK2		GA2・GK2	G4		
					K	N	K	N	K	N	K	K	K	Y	B
DK 13150	**UR,UF**	127 (13,000)	240 (24,500)	150	—	90	60	—	—	—	—	45	—	—	—
DK 13200	**UR,UF**			200	—	110	80	—	—	—	—	80	—	—	—

Chain No.		Combination of standard attachments and rollers						Approx. weight kg/m		Attachment weight (kg/pc).				
Chain size	Roller type	A1 K1	A2 K2	A3 K3	SA2 SK2	GA2 GK2	G4	UR-roller	UF-roller	A2	A3	K2	K3	G4
DK 13150	**UR,UF**	—	UR,UF	—	—	UR,UF	—	10.9	11.6	0.39	—	0.78	—	—
DK 13200	**UR,UF**	—	UR,UF	—	—	UR,UF	—	9.3	9.8	0.48	—	0.96	—	—

Note: 1. The dimensions of the standard and heavy duty chains are the same, but heavy duty chains are made of high strength and structural steel, and are suitable when higher safety rate, strength or wear resistance is required.
2. With Attachment GA2 and GK2, check the bolt length limits shown above.

Dimensional Drawings: DK 19200, DK 19250 and DK 19300 (for Metric series)

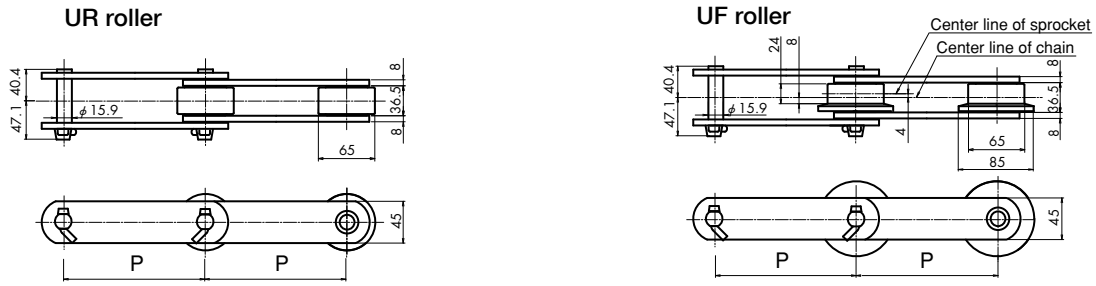

Attachment

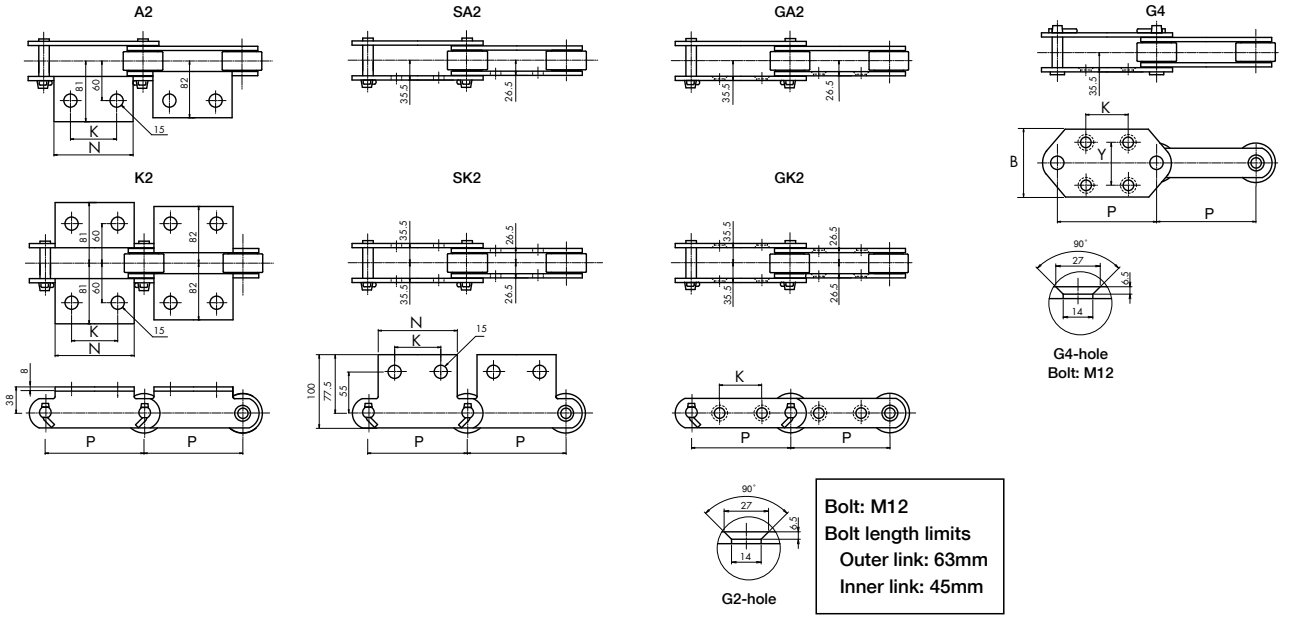

Chain No.		Avg. tensile strength kN (kgf)		Pitch	Standard attachments											
Chain size	Roller type	Standard A,J	Heavy duty K,E	P	A1・K1	A2・K2		A3・K3		SA2・SK2		GA2・GK2	G4		
					N	N	K	N	K	N	K	K	K	Y	B
DK 19200	**UR,UF**	186 (19,000)	279 (28,500)	200	—	120	80	—	—	120	80	80	100	80	125
DK 19250	**UR,UF**			250	—	170	125	—	—	170	125	125	100	80	125
DK 19300	**UR,UF**			300	—	220	180	—	—	—	—	150	—	—	—

Chain No.		Combination of standard attachments and rollers						Approx. weight kg/m		Attachment weight (kg/pc).				
Chain size	Roller type	A1 K1	A2 K2	A3 K3	SA2 SK2	GA2 GK2	G4	UR-roller	UF-roller	A2 SA2	A3	K2 SK2	K3	G4
DK 19200	**UR,UF**	—	UR,UF	—	UR	UR,UF	UR,UF	11.5	12.1	0.49	—	0.98	—	0.95
DK 19250	**UR,UF**	—	UR,UF	—	UR	UR,UF	UR,UF	10.3	10.8	0.69	—	1.38	—	1.20
DK 19300	**UR,UF**	—	UR,UF	—	—	UR,UF	—	9.5	10.0	0.89	—	1.78	—	—

Note: 1. The dimensions of the standard and heavy duty chains are the same, but heavy duty chains are made of high strength and structural steel, and are suitable when higher safety rate, strength or wear resistance is required.
2. With Attachment GA2 and GK2, check the bolt length limits shown above.

Dimensional Drawings: DK 25200, DK 25250 and DK 25300 (for Metric series)

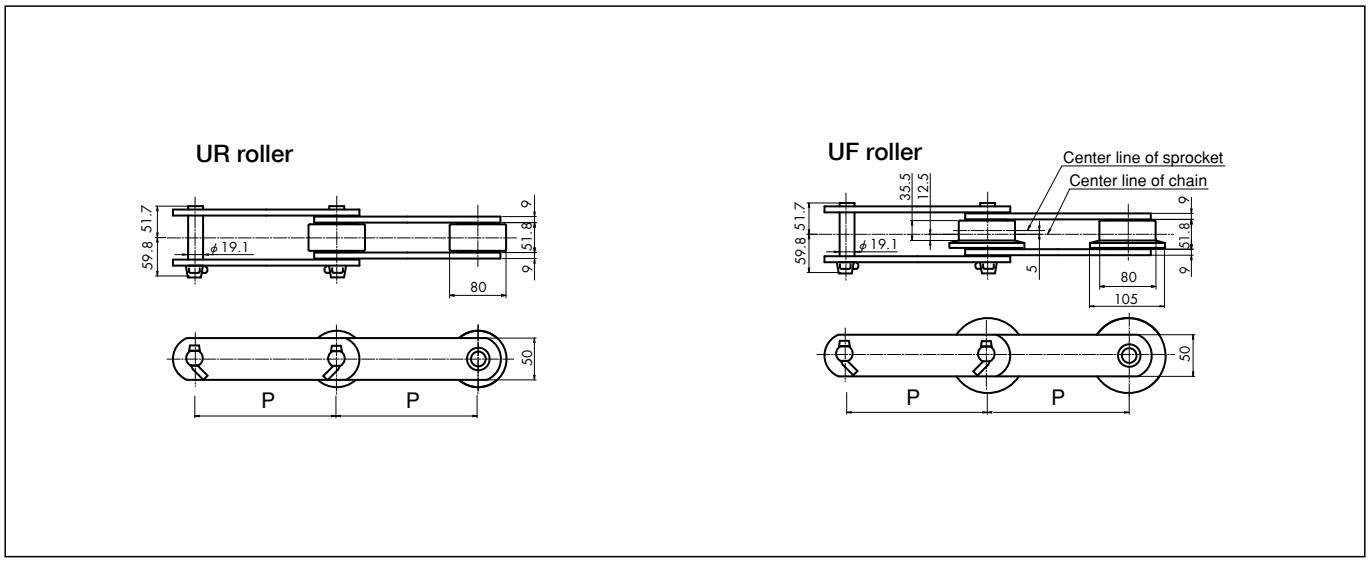

Attachment

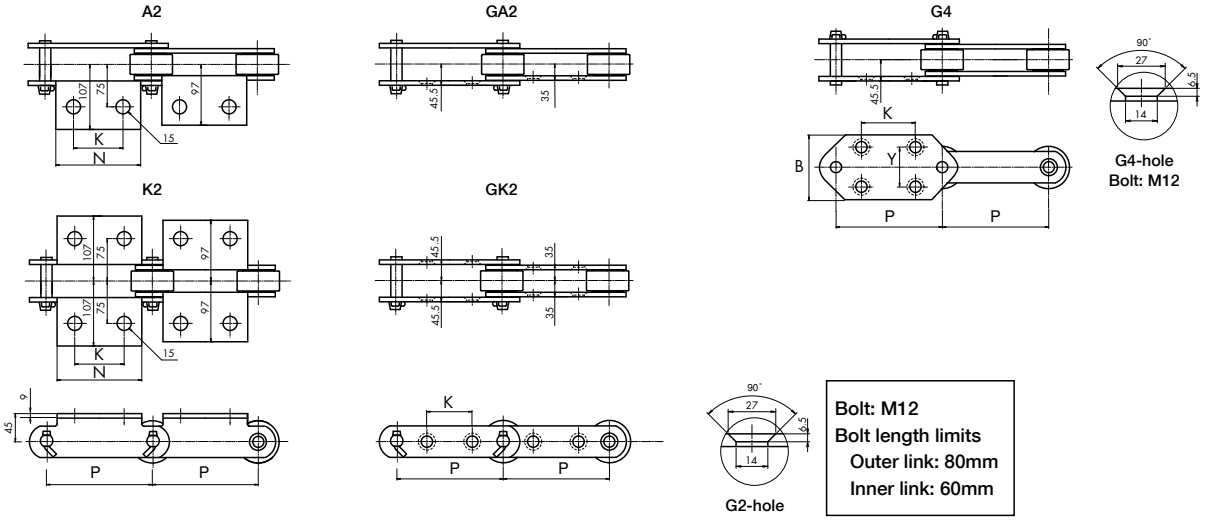

Chain No.		Avg. tensile strength kN (kgf)		Pitch	Standard attachments										
Chain size	Roller type	Standard **A,J**	Heavy duty **K,E**	P	A1・K1	A2・K2		A3・K3		SA2・SK2		GA2・GK2	G4		
					K	N	K	N	K	N	K	K	K	Y	B
DK 25200	**UR,UF**	245 (25,000)	392 (40,000)	200	—	120	80	—	—	—	—	70	100	80	125
DK 25250	**UR,UF**			250	—	170	125	—	—	—	—	110	140	80	125
DK 25300	**UR,UF**			300	—	220	180	—	—	—	—	150	—	—	—

Chain No.		Combination of standard attachments and rollers						Approx. weight kg/m		Attachment weight (kg/pc).				
Chain size	Roller type	A1 K1	A2 K2	A3 K3	SA2 SK2	GA2 GK2	G4	UR-roller	UF-roller	A2	A3	K2	K3	G4
DK 25200	**UR,UF**	—	UR,UF	—	—	UR,UF	UR,UF	18.2	19.5	0.63	—	1.26	—	1.05
DK 25250	**UR,UF**	—	UR,UF	—	—	UR,UF	UR,UF	15.9	17.0	0.90	—	1.80	—	1.32
DK 25300	**UR,UF**	—	UR,UF	—	—	UR,UF	—	14.5	15.3	1.16	—	2.32	—	—

Note: 1. The dimensions of the standard and heavy duty chains are the same, but heavy duty chains are made of high strength and structural steel, and are suitable when higher safety rate, strength or wear resistance is required.
2. With Attachment GA2 and GK2, check the bolt length limits shown above.

Dimensional Drawings: DK 32200, DK 32250, DK 32300 and DK 32450 (for Metric series)

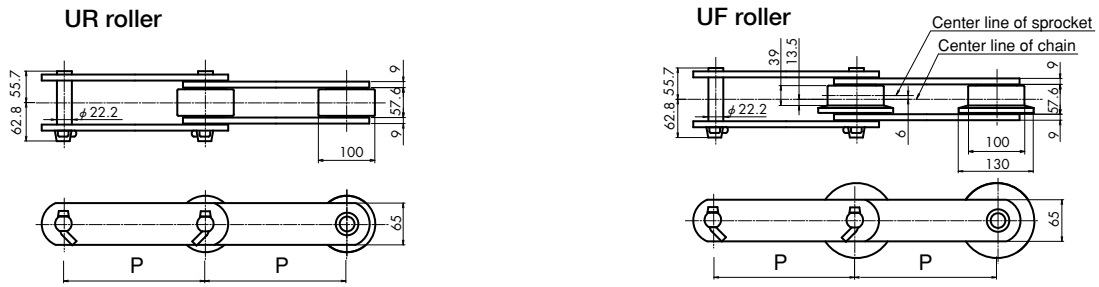

Attachment

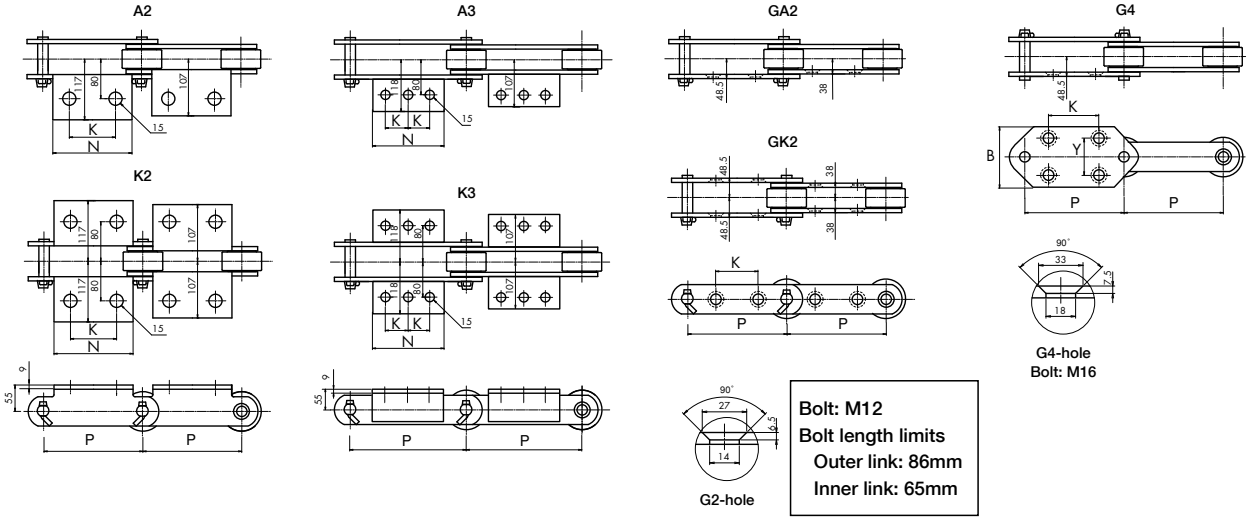

Chain No.		Avg. tensile strength kN (kgf)		Pitch	Standard attachments										
Chain size	Roller type	Standard A,J	Heavy duty K,E	P	A1・K1	A2・K2		A3・K3		SA2・SK2		GA2・GK2	G4		
					N	N	K	N	K	N	K	K	K	Y	B
DK 32200	**UR,UF**	313 (32,000)	500 (51,000)	200	—	120	80	—	—	—	—	70(40)	100	80	125
DK 32250	**UR,UF**			250	—	170	125	—	—	—	—	110(90)	140	100	150
DK 32300	**UR,UF**			300	—	220	180	—	—	—	—	140	170	100	150
DK 32450	**UR,UF**			450	—	330	280	330	140	—	—	220	—	—	—

Chain No.		Combination of standard attachments and rollers						Approx. weight kg/m		Attachment weight (kg/pc).				
Chain size	Roller type	A1 K1	A2 K2	A3 K3	SA2 SK2	GA2 GK2	G4	UR-roller	UF-roller	A2	A3	K2	K3	G4
DK 32200	**UR,UF**	—	UR,UF	—	—	UR,UF	UR,UF	28.2	30.2	0.72	—	1.44	—	0.91
DK 32250	**UR,UF**	—	UR,UF	—	—	UR,UF	UR,UF	24.6	26.2	1.01	—	2.02	—	1.48
DK 32300	**UR,UF**	—	UR,UF	—	—	UR,UF	UR,UF	22.0	23.4	1.31	—	2.62	—	1.78
DK 32450	**UR,UF**	—	UR,UF	UR,UF	—	UR,UF	—	17.8	18.7	—	1.97	—	3.97	—

Note: 1. The dimensions of the standard and heavy duty chains are the same, but heavy duty chains are made of high strength and structural steel, and are suitable when higher safety rate, strength or wear resistance is required.
2. K dimensions in ( ) for Attachment GA2 and GK2 are for Roller UF.
3. With Attachment GA2 and GK2, check the bolt length limits shown above.
4. Attachment A3 and K3 are angle welding attachments.

Dimensional Drawings: DK 50250, DK 50300, DK 50450 and DK 50600 (for Metric series)

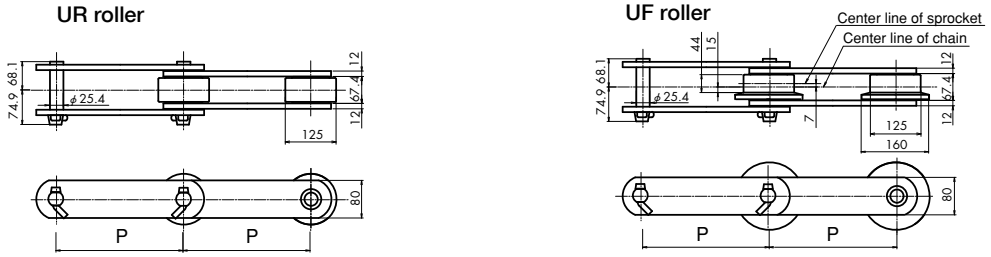

Attachment

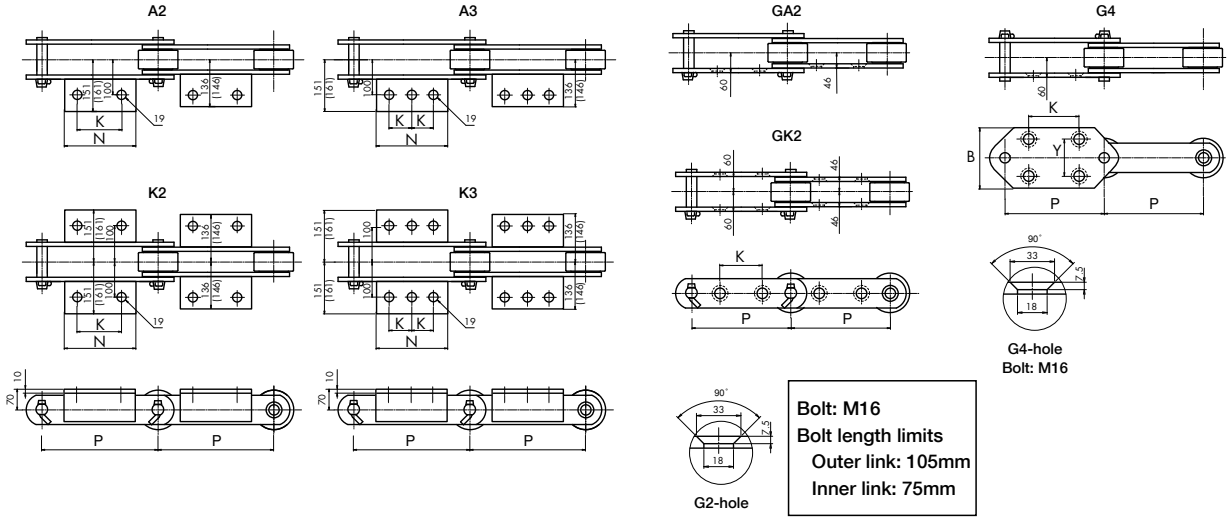

Chain No.		Avg. tensile strength kN (kgf)		Pitch	Standard attachments										
Chain size	Roller type	Standard A,J	Heavy duty K,E	P	A1・K1	A2・K2		A3・K3		SA2・SK2		GA2・GK2	G4		
					N	N	K	N	K	N	K	K	K	Y	B
DK 50250	**UR,UF**	490 (50,000)	686 (70,000)	250	—	170	125	—	—	—	—	90 (55)	140	100	150
DK 50300	**UR,UF**			300	—	220	180	—	—	—	—	140(105)	170	100	150
DK 50450	**UR,UF**			450	—	—	—	330	140	—	—	220	—	—	—
DK 50600	**UR,UF**			600	—	—	—	410	180	—	—	300	—	—	—

Chain No.		Combination of standard attachments and rollers						Approx. weight kg/m		Attachment weight (kg/pc).				
Chain size	Roller type	A1 K1	A2 K2	A3 K3	SA2 SK2	GA2 GK2	G4	UR-roller	UF-roller	A2	A3	K2	K3	G4
DK 50250	**UR,UF**	—	UR,UF	—	—	UR,UF	UR,UF	42.7	45.8	2.26	—	4.52	—	1.74
DK 50300	**UR,UF**	—	UR,UF	—	—	UR,UF	UR,UF	38.0	40.4	2.93	—	5.86	—	2.07
DK 50450	**UR,UF**	—	—	UR,UF	—	UR,UF	—	30.3	31.9	—	4.39	—	8.78	—
DK 50600	**UR,UF**	—	—	UR,UF	—	UR,UF	—	26.7	28.0	—	5.45	—	10.90	—

Note: 1. The dimensions of the standard and heavy duty chains are the same, but heavy duty chains are made of high strength and structural steel, and are suitable when higher safety rate, strength or wear resistance is required.
2. K dimensions in ( ) for Attachment GA2 and GK2 are for Roller UF.
3. With Attachment GA2 and GK2, check the bolt length limits shown above.
4. Attachment A3 and K3 are angle welding attachments.

Dimensional Drawings: DK 65300 and DK 65450 (for Metric series)

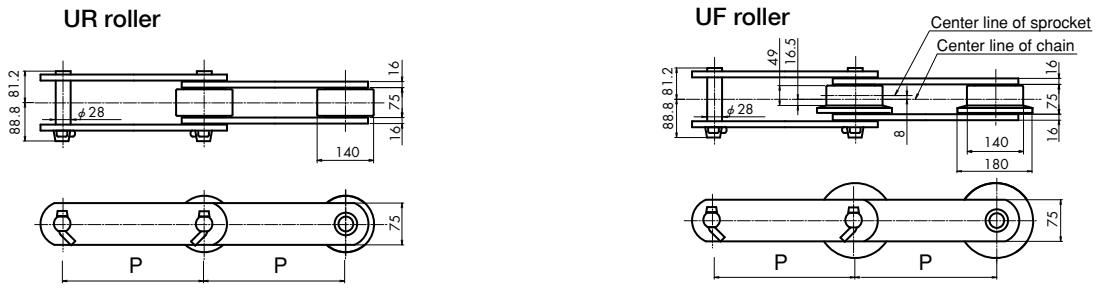

Attachment

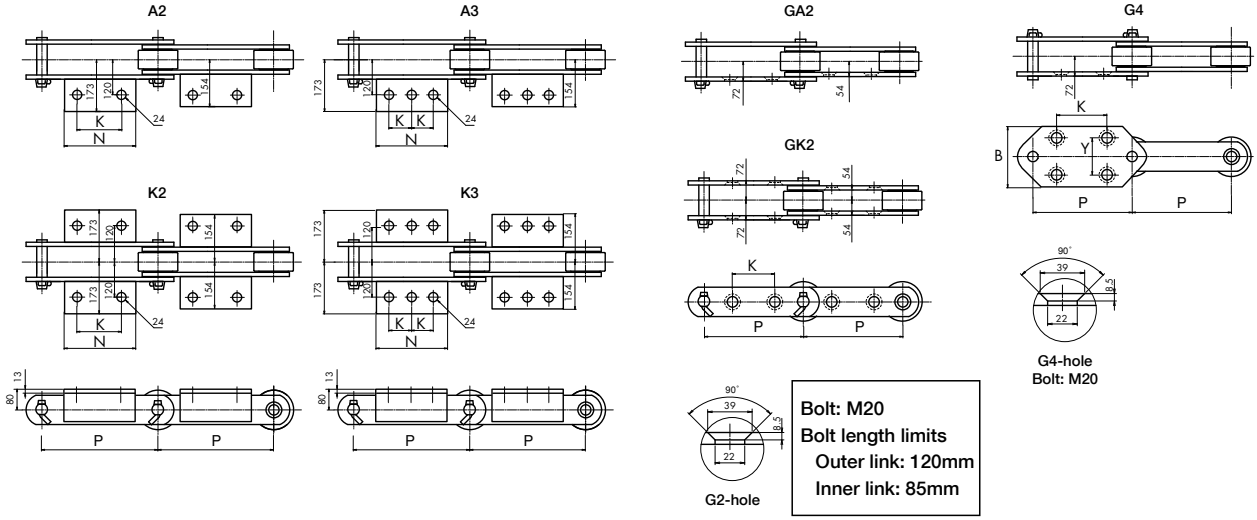

Bolt: M20
Bolt length limits
Outer link: 120mm
Inner link: 85mm

Chain No.		Avg. tensile strength kN (kgf)		Pitch	Standard attachments										
Chain size	Roller type	Standard **A,J**	Heavy duty **K,E**	P	A1・K1	A2・K2		A3・K3		SA2・SK2		GA2・GK2	G4		
					N	N	K	N	K	N	K	K	K	Y	B
DK 65300	**UR,UF**	637 (65,000)	882 (90,000)	300	—	180	130	—	—	—	—	120(80)	170	100	160
DK 65450	**UR,UF**			450	—	—	—	330	140	—	—	200	—	—	—

Chain No.		Combination of standard attachments and rollers						Approx. weight kg/m		Attachment weight (kg/pc).				
Chain size	Roller type	A1 K1	A2 K2	A3 K3	SA2 SK2	GA2 GK2	G4	UR-roller	UF-roller	A2	A3	K2	K3	G4
DK 65300	**UR,UF**	—	UR,UF	—	—	UR,UF	UR,UF	47.8	51.2	3.44	—	6.88	—	2.81
DK 65450	**UR,UF**	—	—	UR,UF	—	UR,UF	—	37.0	39.3	—	6.30	—	12.6	—

Note: 1. The dimensions of the standard and heavy duty chains are the same, but heavy duty chains are made of high strength and structural steel, and are suitable when higher safety rate, strength or wear resistance is required.
2. K dimensions in ( ) for Attachment GA2 and GK2 are for Roller UF.
3. With Attachment GA2 and GK2, check the bolt length limits shown above.
4. Attachment A3 and K3 are angle welding attachments.

Dimensional Drawings: DK 05101 (for Inch series)

UR roller

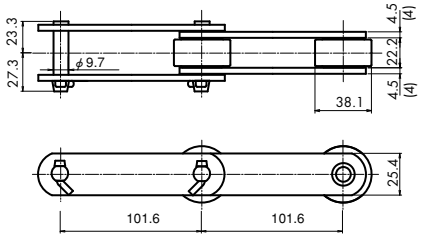

Attachment

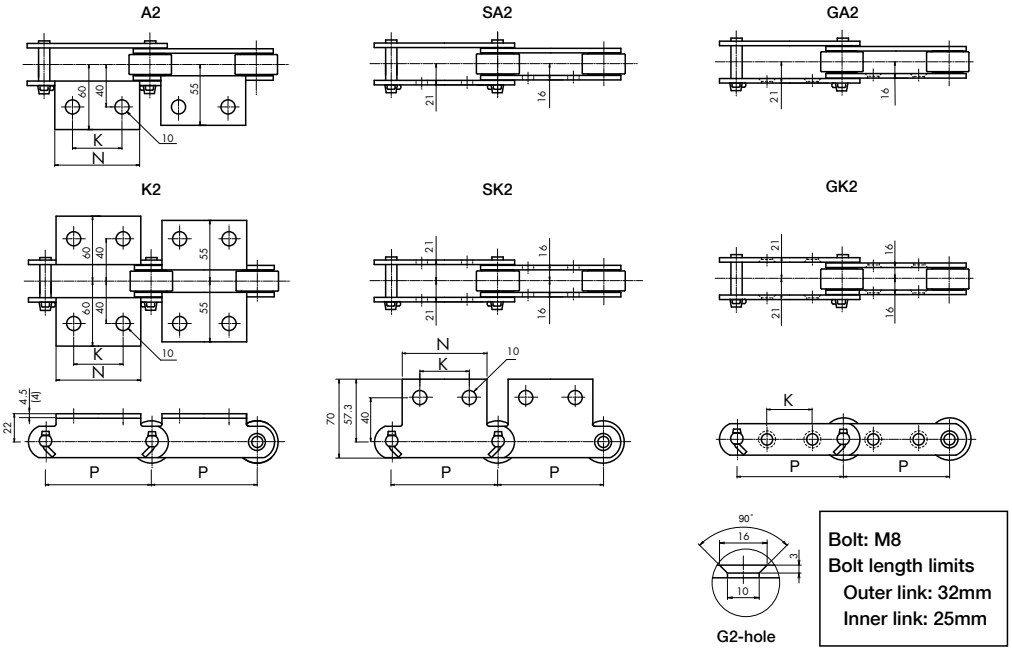

Chain No.		Avg. tensile strength kN (kgf)		Pitch	Standard attachments										
Chain size	Roller type	Standard A,J	Heavy duty K,E	P	A1・K1	A2・K2		A3・K3		SA2・SK2		GA2・GK2	G4		
					N	N	K	N	K	N	K	K	K	Y	B
DK 05101	**UR**	53.9 (5,500)	98 (10,000)	101.6	—	70	40	—	—	70	40	45	—	—	—

Chain No.		Combination of standard attachments and rollers						Approx. weight kg/m	Attachment weight (kg/pc).				
Chain size	Roller type	A1 K1	A2 K2	A3 K3	SA2 SK2	GA2 GK2	G4	UR-roller	A2 SA2	A3	K2 SK2	K3	G4
DK 05101	**UR**	—	UR	—	UR	UR	—	4.1	0.72	—	0.24	—	—

Note: 1. Dimensions in ( ) for the plate thickness are for the stainless steel chains. Dimensions for plate thickness without ( ) apply to all types.
2. The dimensions of the standard and heavy duty chains are the same, but heavy duty chains are made of high strength and structural steel, and are suitable when higher safety rate, strength or wear resistance is required.
3. With Attachment GA2 and GK2, check the bolt length limits shown above.

Dimensional Drawings: DK 08101 (for Inch series)

UR roller

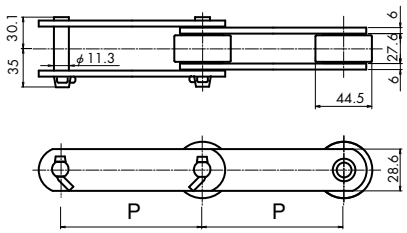

UF roller

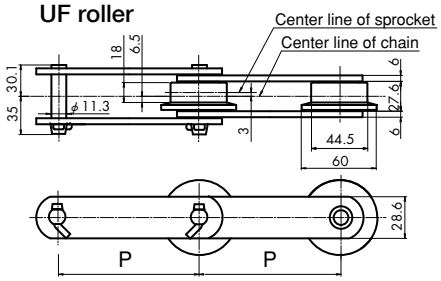

Attachment

A2

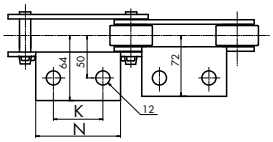

SA2

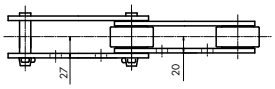

GA2

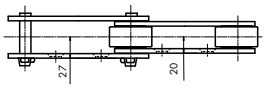

GK2

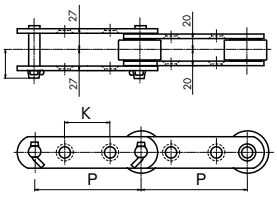

K2

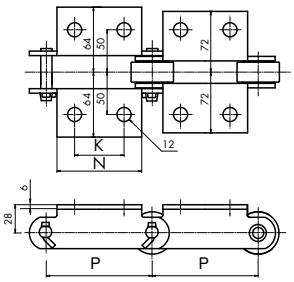

SK2

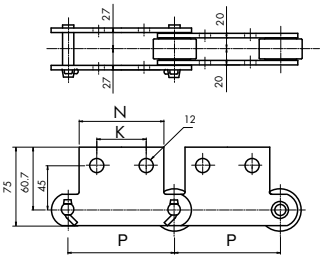

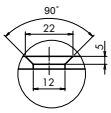

G2-hole

Bolt: M8
Bolt length limits
Outer link: 35mm
Inner link: 25mm

Chain No.		Avg. tensile strength kN (kgf)		Pitch	Standard attachments										
Chain size	Roller type	Standard **A,J**	Heavy duty **K,E**	P	A1・K1	A2・K2		A3・K3		SA2・SK2		GA2・GK2	G4		
					N	N	K	N	K	N	K	K	K	Y	B
DK 08101	**UR,UF**	78.4 (8,000)	142 (14,500)	101.6	—	70	40	—	—	70	40	35	—	—	—

Chain No.		Combination of standard attachments and rollers						Approx. weight kg/m		Attachment weight (kg/pc).				
Chain size	Roller type	A1 K1	A2 K2	A3 K3	SA2 SK2	GA2 GK2	G4	UR-roller	UF-roller	A1,A2 SA2	A3	K1,K2 SK2	K3	G4
DK 08101	**UR,UF**	—	UR,UF	—	UR,UF	UR,UF	—	6.9	7.3	0.20	—	0.40	—	—

Note: 1. The dimensions of the standard and heavy duty chains are the same, but heavy duty chains are made of high strength and structural steel, and are suitable when higher safety rate, strength or wear resistance is required.
2. With Attachment GA2 and GK2, check the bolt length limits shown above.

Dimensional Drawings: DK 09101 (for Inch series)

UR roller

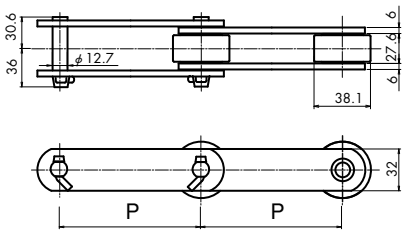

Attachment

A2

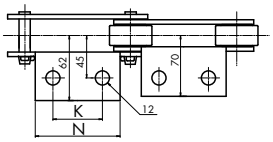

GA2

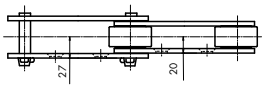

K2

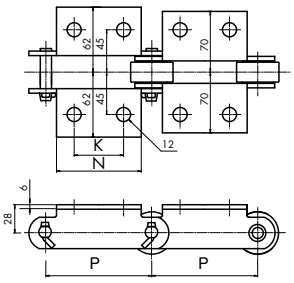

GK2

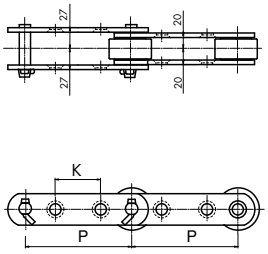

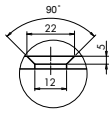

G2-hole

Bolt: M10
Bolt length limits
Outer link: 43mm
Inner link: 30mm

Chain No.		Avg. tensile strength kN (kgf)		Pitch	Standard attachments										
Chain size	Roller type	Standard A,J	Heavy duty K,E	P	A1・K1	A2・K2		A3・K3		SA2・SK2		GA2・GK2	G4		
					N	N	K	N	K	N	K	K	K	Y	B
DK 09101	**UR**	88.2 (9,000)	156 (16,000)	101.6	—	70	40	—	—	—	—	40	—	—	—

Chain No.		Combination of standard attachments and rollers						Approx. weight kg/m	Attachment weight (kg/pc).				
Chain size	Roller type	A1 K1	A2 K2	A3 K3	SA2 SK2	GA2 GK2	G4	UR-roller	A2	A3	K2	K3	G4
DK 09101	**UR**	—	UR	—	—	UR	—	6.4	0.19	—	0.38	—	—

Note: 1. The dimensions of the standard and heavy duty chains are the same, but heavy duty chains are made of high strength and structural steel, and are suitable when higher safety rate, strength or wear resistance is required.
2. With Attachment GA2 and GK2, check the bolt length limits shown above.

Dimensional Drawings: DK 11152 (for Inch series)

UR roller

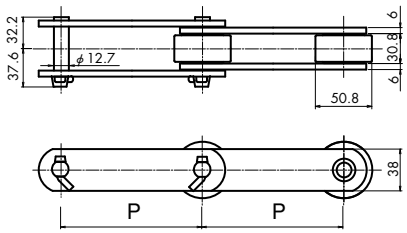

UF roller

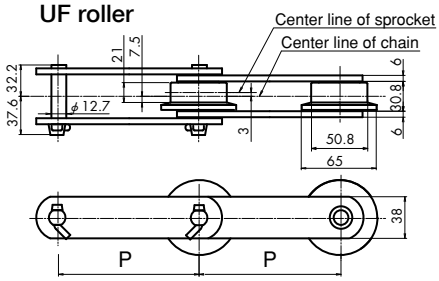

Attachment

A2

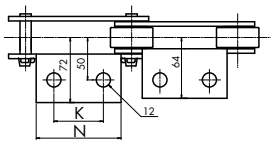

SA2

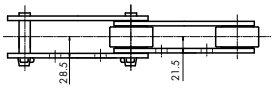

GA2

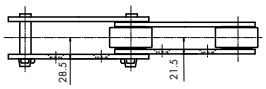

G4

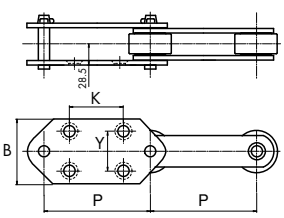

K2

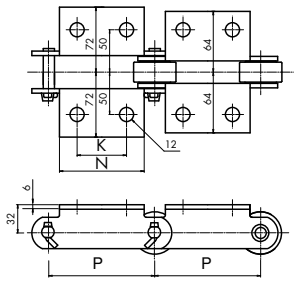

SK2

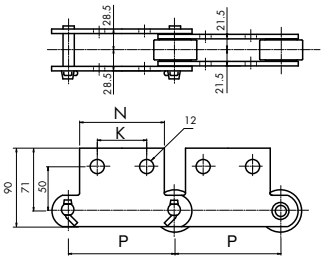

GK2

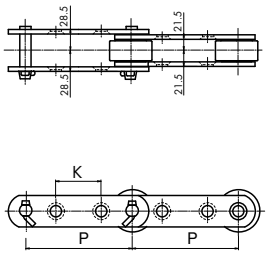

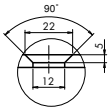

G4-hole
Bolt: M10

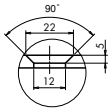

G2-hole

Bolt: M10
Bolt length limits
Outer link: 49mm
Inner link: 35mm

Chain No.		Avg. tensile strength kN (kgf)		Pitch	Standard attachments										
Chain size	Roller type	Standard **A,J**	Heavy duty **K,E**	P	A1・K1	A2・K2		A3・K3		SA2・SK2		GA2・GK2	G4		
					N	N	K	N	K	N	K	K	K	Y	B
DK 11152	**UR,UF**	112 (11,500)	171 (17,500)	152.4	—	90	60	—	—	90	60	60	75	70	100

Chain No.		Combination of standard attachments and rollers						Approx. weight kg/m		Attachment weight (kg/pc).				
Chain size	Roller type	A1 K1	A2 K2	A3 K3	SA2 SK2	GA2 GK2	G4	UR-roller	UF-roller	A2	A3	K2	K3	G4
DK 11152	**UR,UF**	—	UR,UF	—	UR	UR,UF	UR,UF	7.4	7.9	0.22	—	0.44	—	—

Note: 1. The dimensions of the standard and heavy duty chains are the same, but heavy duty chains are made of high strength and structural steel, and are suitable when higher safety rate, strength or wear resistance is required.
2. With Attachment GA2 and GK2, check the bolt length limits shown above.

Dimensional Drawings: DK 13101 (for Inch series)

UR roller

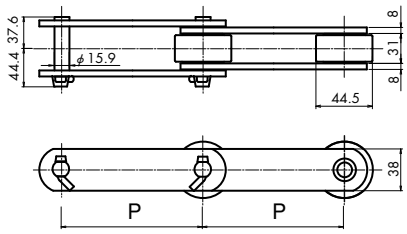

Attachment

A2

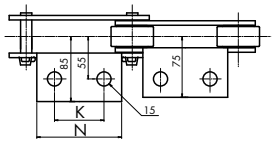

SA2

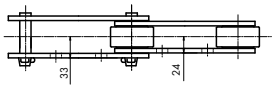

K2

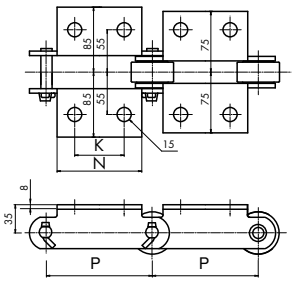

SK2

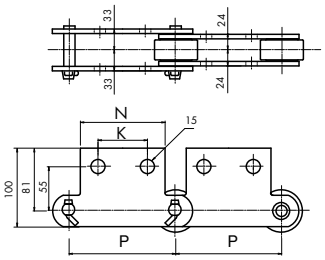

Chain No.		Avg. tensile strength kN (kgf)		Pitch	Standard attachments										
Chain size	Roller type	Standard **A,J**	Heavy duty **K,E**	P	A1・K1	A2・K2		A3・K3		SA2・SK2		GA2・GK2	G4		
					N	N	K	N	K	N	K	K	K	Y	B
DK 13101	**UR**	127 (13,000)	240 (24,500)	101.6	—	80	40	—	—	80	40	—	—	—	—

Chain No.		Combination of standard attachments and rollers						Approx. weight kg/m	Attachment weight (kg/pc).				
Chain size	Roller type	A1 K1	A2 K2	A3 K3	SA2 SK2	GA2 GK2	G4	UR-roller	A2 SA2	A3	K2 SK2	K3	G4
DK 13101	**UR**	—	UR	—	UR	—	—	10.3	0.31	—	0.62	—	—

Note: The dimensions of the standard and heavy duty chains are the same, but heavy duty chains are made of high strength and structural steel, and are suitable when higher safety rate, strength or wear resistance is required.

Dimensional Drawings: DK 19152 (for Inch series)

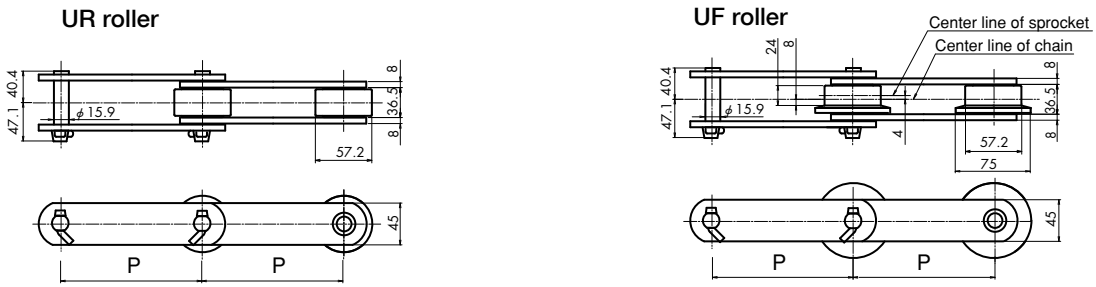

Attachment

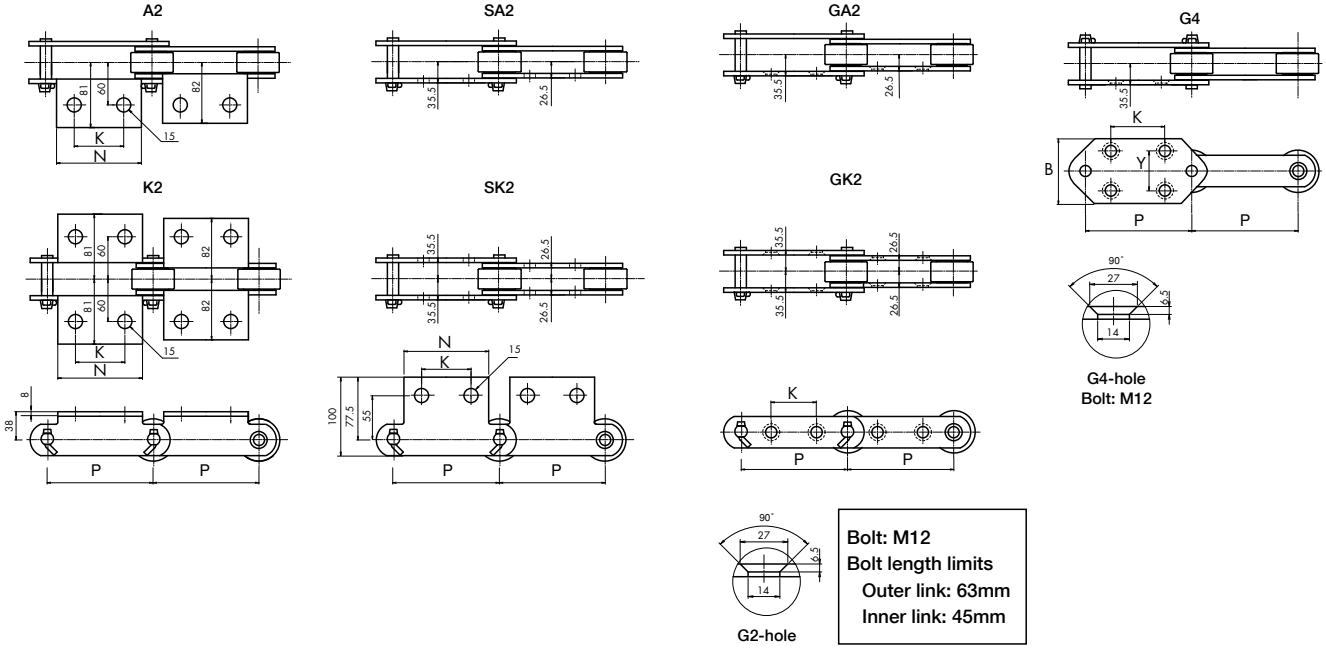

Chain No.		Avg. tensile strength kN (kgf)		Pitch	Standard attachments										
Chain size	Roller type	Standard **A,J**	Heavy duty **K,E**	P	A1・K1	A2・K2		A3・K3		SA2・SK2		GA2・GK2	G4		
					N	N	K	N	K	N	K	K	K	Y	B
DK 19152	**UR,UF**	186 (19,000)	279 (28,500)	152.4	—	100	60	—	—	100	60	50	75	70	110

Chain No.		Combination of standard attachments and rollers						Approx. weight kg/m		Attachment weight (kg/pc).				
Chain size	Roller type	A1 K1	A2 K2	A3 K3	SA2 SK2	GA2 GK2	G4	UR-roller	UF-roller	A2 SA2	A3	K2 SK2	K3	G4
DK 19152	**UR,UF**	—	UR,UF	—	UR	UR,UF	UR,UF	11.8	12.2	0.41	—	0.82	—	0.60

Note: 1. The dimensions of the standard and heavy duty chains are the same, but heavy duty chains are made of high strength and structural steel, and are suitable when higher safety rate, strength or wear resistance is required.
2. With Attachment GA2 and GK2, check the bolt length limits shown above.

Dimensional Drawings: DK 25152 (for Inch series)

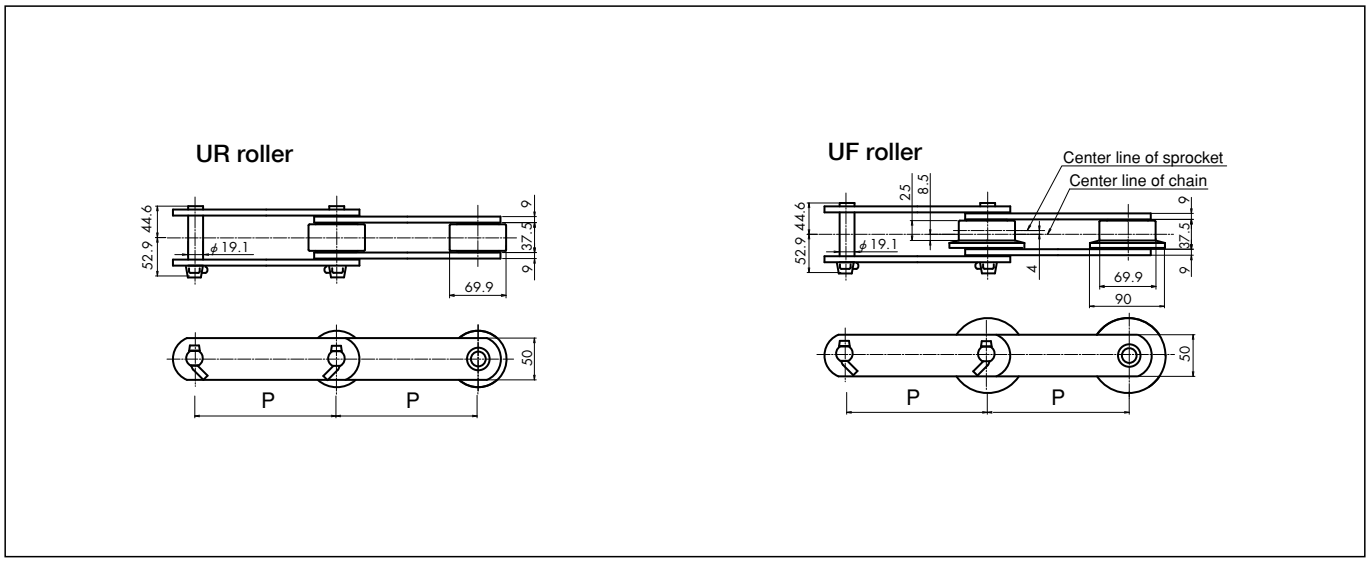

Attachment

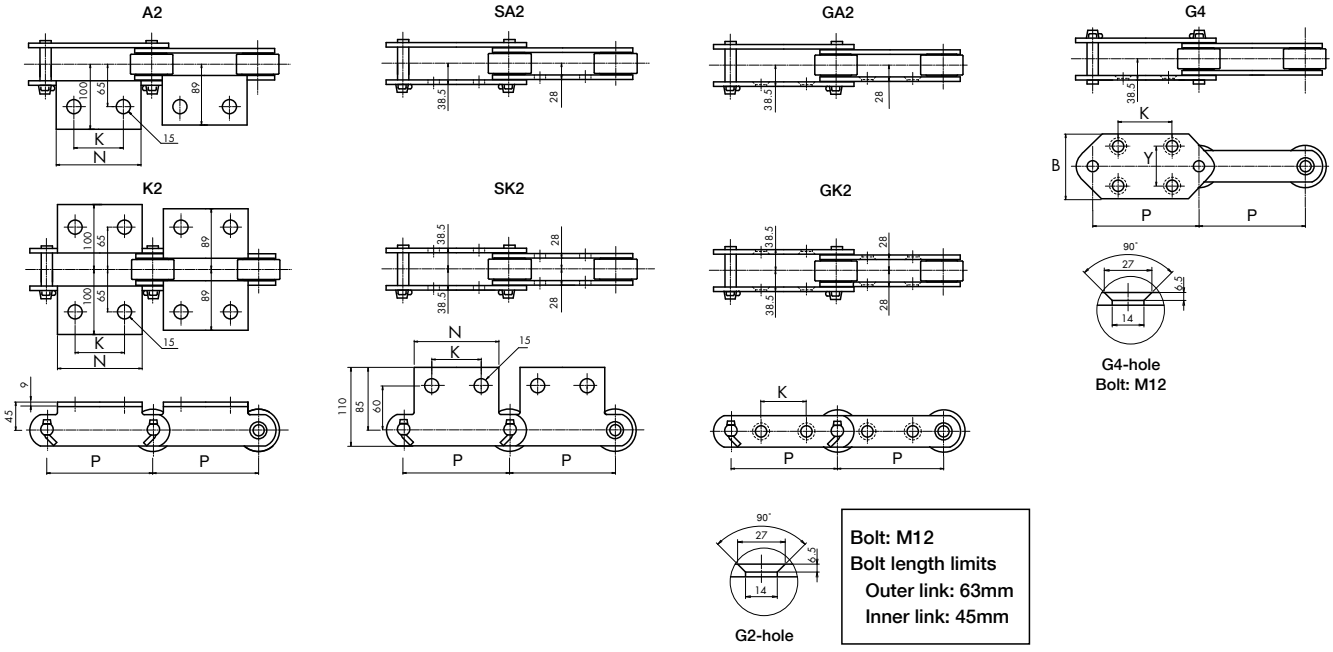

Chain No.		Avg. tensile strength kN (kgf)		Pitch	Standard attachments										
Chain size	Roller type	Standard **A,J**	Heavy duty **K,E**	P	A1・K1	A2・K2		A3・K3		SA2・SK2		GA2・GK2	G4		
					N	N	K	N	K	N	K	K	K	Y	B
DK 25152	**UR,UF**	245 (25,000)	392 (40,000)	152.4	—	100	60	—	—	100	60	55(35)	75	70	125

Chain No.		Combination of standard attachments and rollers						Approx. weight kg/m		Attachment weight (kg/pc).				
Chain size	Roller type	A1 K1	A2 K2	A3 K3	SA2 SK2	GA2 GK2	G4	UR-roller	UF-roller	A2 SA2	A3	K2 SK2	K3	G4
DK 25152	**UR,UF**	—	UR,UF	—	UR	UR,UF	UR,UF	16.4	17.3	0.53	—	1.06	—	0.79

Note: 1. The dimensions of the standard and heavy duty chains are the same, but heavy duty chains are made of high strength and structural steel, and are suitable when higher safety rate, strength or wear resistance is required.
2. K dimensions in ( ) for Attachment GA2 and GK2 are for Roller UF.
3. With Attachment GA2 and GK2, check the bolt length limits shown above.

Bearing Assembled Roller Conveyor Chain

This chain has bearings built into the rollers. A chain smaller than a regular conveyor can be selected because the drive loss of the chain is small due to small rolling friction of the rollers, and the allowable load of the rollers is large.

- ○ The chain is identical to Standard Conveyor Chains with Roller R and Roller F.
- ○ Sprockets for Standard Conveyor Chains can be used.
- ○ Dimensions for attachments are also identical to those of Standard Conveyor Chains.
- ○ Coefficient of rolling friction: f=0.035~0.050

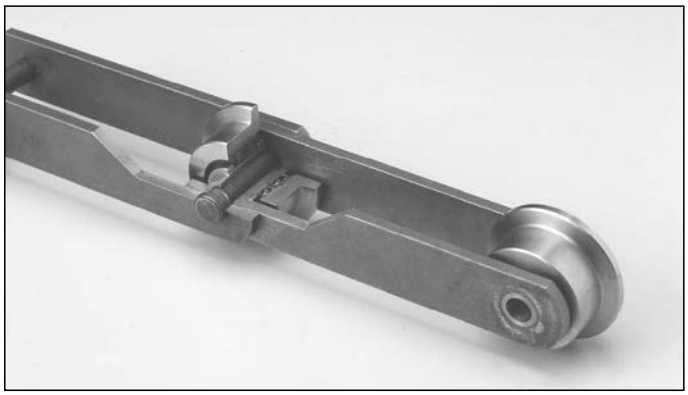

Application examples

- ○ Conveyors with extensive center distance.
- ○ Conveyors that need to have smooth movement and high precision
- ○ Assembly line of automobiles

Slat conveyors that are provided with slats (duplex chain) on both sides are used in assembling, finishing and inspection lines of automobiles. Since their center distances are very long and high accuracy and smooth feeding are required, bearing assembled roller conveyor chains are used.



Table of applicable attachments

Chain No.	Standard attachment											
	A1	A2	A3	K1	K2	K3	SA1	SA2	SK1	SK2	GA2	GK2
DK 11100	×	○	×	×	○	×	×	○	×	○	○	○
DK 11125	×	○	×	×	○	×	×	×	×	×	○	○
DK 11150	×	○	×	×	○	×	×	○	×	○	○	○
DK 11200	×	○	×	×	○	×	×	×	×	×	○	○
DK 13150	×	○	×	×	○	×	×	×	×	×	○	○
DK 13200	×	○	×	×	○	×	×	×	×	×	○	○
DK 19200	×	○	×	×	○	×	×	○	×	○	○	○
DK 19250	×	○	×	×	○	×	×	○	×	○	○	○
DK 19300	×	○	×	×	○	×	×	×	×	×	○	○
DK 25200	×	○	×	×	○	×	×	×	×	×	○	○
DK 25250	×	○	×	×	○	×	×	×	×	×	○	○
DK 25300	×	○	×	×	○	×	×	×	×	×	○	○
DK 32200	×	○	×	×	○	×	×	×	×	×	○	○
DK 32250	×	○	×	×	○	×	×	×	×	×	○	○
DK 32300	×	○	×	×	○	×	×	×	×	×	○	○
DK 32450	×	○	×	×	○	×	×	×	×	×	○	○
DK 50250	×	○	×	×	○	×	×	×	×	×	○	○
DK 50300	×	○	×	×	○	×	×	×	×	×	○	○
DK 50450	×	×	○	×	×	○	×	×	×	×	○	○
DK 11152	×	○	×	×	○	×	×	○	×	○	○	○
DK 19152	×	○	×	×	○	×	×	○	×	○	○	○
DK 25152	×	○	×	×	○	×	×	○	×	○	○	○

○ : Standard product × : Nonstandard product
Note: Consult us for manufacturing nonstandard products.

Dimensional Drawings: DK 11100, DK 11125, DK 11150, and DK 11200 (for Metric series)

BR roller

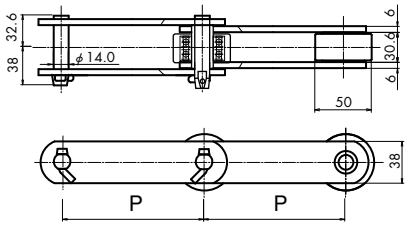

BF roller

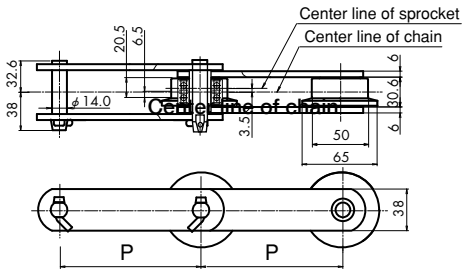

Attachment

A2

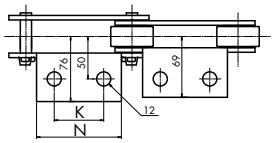

SA2

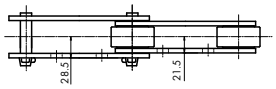

GA2

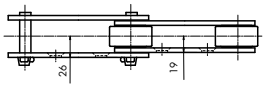

K2

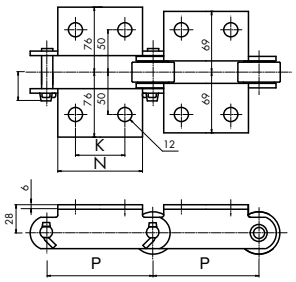

SK2

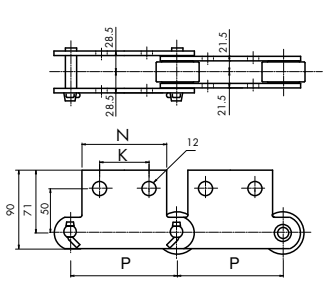

GK2

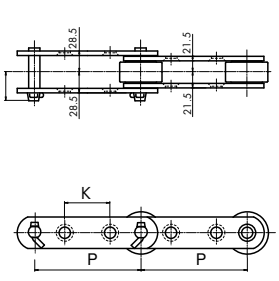

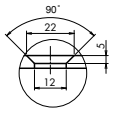

G2-hole

Bolt: M10
Bolt length limits
Outer link: 49mm
Inner link: 35mm

Chain No.		Avg. tensile strength kN (kgf)		Pitch	Standard attachments										
Chain size	Roller type	Standard **A,J**	Heavy duty **K,E**	P	A1・K1	A2・K2		A3・K3		SA2・SK2		GA2・GK2	G4		
					N	N	K	N	K	N	K	K	K	Y	B
DK 11100	**BR,BF**	112 (11,500)	225 (23,000)	100	—	70	40	—	—	70	40	35	—	—	—
DK 11125	**BR,BF**			125	—	80	50	—	—	—	—	35	—	—	—
DK 11150	**BR,BF**			150	—	90	60	—	—	90	60	60	—	—	—
DK 11200	**BR,BF**			200	—	110	80	—	—	—	—	80	—	—	—

Chain No.		Combination of standard attachments and rollers						Approx. weight kg/m		Attachment weight (kg/pc).					Roller allowable load (kgf/pc).	
Chain size	Roller type	A1 K1	A2 K2	A3 K3	SA2 SK2	GA2 GK2	G4	BR-roller	BF-roller	A2 SA2	A3	K2 SK2	K3	G4	BR	BF
DK 11100	**BR,BF**	—	BR,BF	—	BR	—	—	9.6	10.1	0.19	—	0.39	—	—	315	235
DK 11125	**BR,BF**	—	BR,BF	—	—	BR,BF	—	8.5	8.9	0.21	—	0.42	—	—		
DK 11150	**BR,BF**	—	BR,BF	—	BR	BR,BF	—	7.6	7.9	0.24	—	0.48	—	—		
DK 11200	**BR,BF**	—	BR,BF	—	—	BR,BF	—	6.5	6.8	0.29	—	0.58	—	—		

Note: 1. The dimensions of the standard and heavy duty chains are the same, but heavy duty chains are made of high strength and structural steel, and are suitable when higher safety rate, strength or wear resistance is required.
2. With Attachment GA2 and GK2, check the bolt length limits shown above.
3. Roller allowable load depends on the tension resistance of the rail. The values in the table were calculated with a rail made of a material with 400N/mm^2.

Dimensional Drawings: DK 13150 and DK 13200 (for Metric series)

BR roller

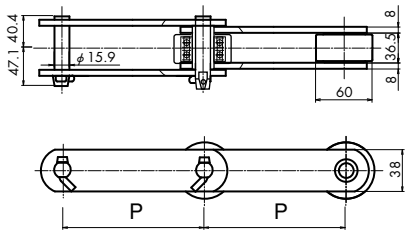

BF roller

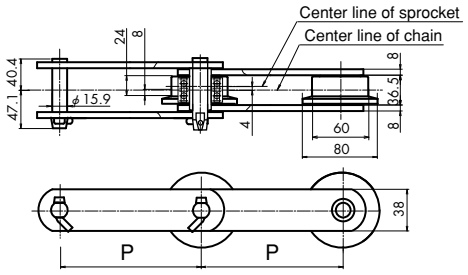

Attachment

A2

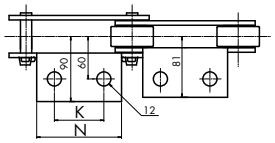

GA2

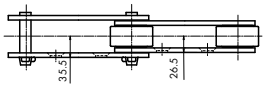

K2

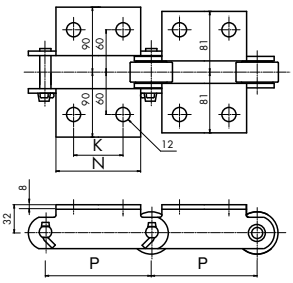

GK2

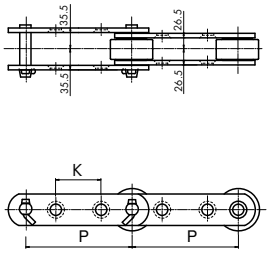

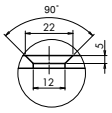

G2-hole

Bolt: M10
Bolt length limits
Outer link: 60mm
Inner link: 40mm

Chain No.		Avg. tensile strength kN (kgf)		Pitch	Standard attachments										
Chain size	Roller type	Standard **A,J**	Heavy duty **K,E**	P		A2・K2		A3・K3		SA2・SK2		GA2・GK2	G4		
					K	N	K	N	K	N	K	K	K	Y	B
DK 13150	**BR,BF**	127 (13,000)	240 (24,500)	150	—	90	60	—	—	—	—	45	—	—	—
DK 13200	**BR,BF**			200	—	110	80	—	—	—	—	80	—	—	—

Chain No.		Combination of standard attachments and rollers						Approx. weight kg/m		Attachment weight (kg/pc).					Roller allowable load (kgf/pc).	
Chain size	Roller type	A1 K1	A2 K2	A3 K3	SA2 SK2	GA2 GK2	G4	BR-roller	BF-roller	A2 SA2	A3	K2 SK2	K3	G4	BR	BF
DK 13150	**BR,BF**	—	BR,BF	—	—	BR,BF	—	10.9	11.6	0.39	—	0.78	—	—	440	330
DK 13200	**BR,BF**	—	BR,BF	—	—	BR,BF	—	9.3	9.8	0.48	—	0.96	—	—		

Note: 1. The dimensions of the standard and heavy duty chains are the same, but heavy duty chains are made of high strength and structural steel, and are suitable when higher safety rate, strength or wear resistance is required.
2. With Attachment GA2 and GK2, check the bolt length limits shown above.
3. Roller allowable load depends on the tension resistance of the rail. The values in the table were calculated with a rail made of a material with 400N/mm².

Dimensional Drawings: DK 19200, DK 19250 and DK 19300 (for Metric series)

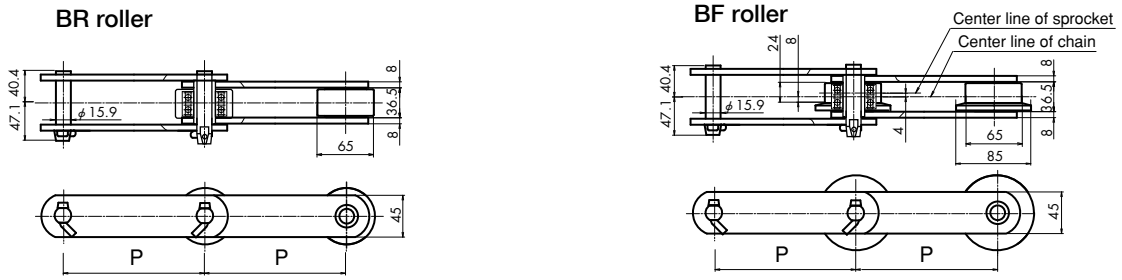

Attachment

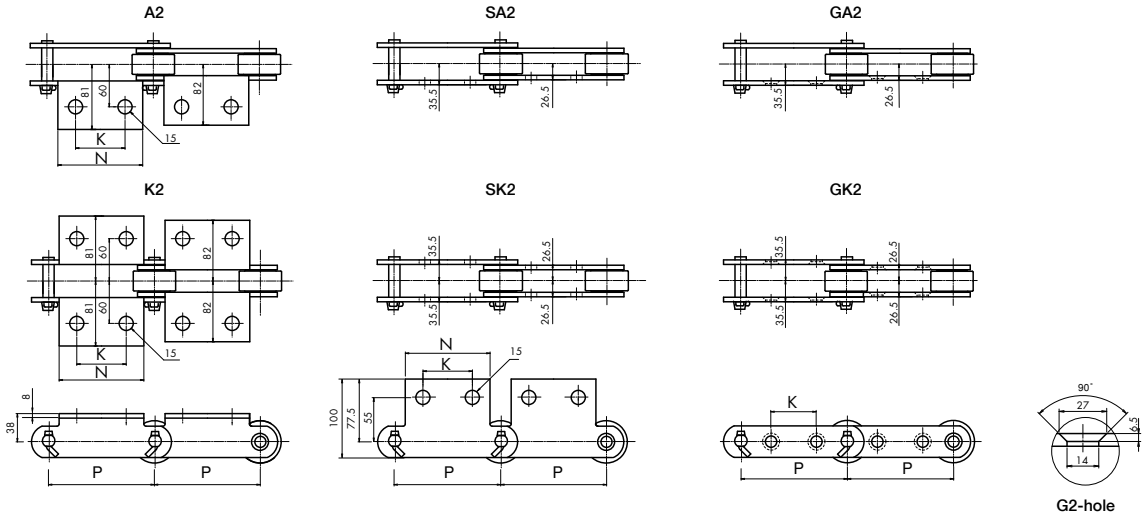

Bolt: M12
Bolt length limits
Outer link: 63mm
Inner link: 45mm

Chain No.		Avg. tensile strength kN (kgf)		Pitch	Standard attachments										
Chain size	Roller type	Standard **A,J**	Heavy duty **K,E**	P	A1・K1	A2・K2		A3・K3		SA2・SK2		GA2・GK2	G4		
					N	N	K	N	K	N	K	K	K	Y	B
DK 19200	**BR,BF**	186 (19,000)	279 (28,500)	200	—	120	80	—	—	120	80	80	—	—	—
DK 19250	**BR,BF**			250	—	170	125	—	—	170	125	125	—	—	—
DK 19300	**BR,BF**			300	—	220	180	—	—	—	—	150	—	—	—

Chain No.		Combination of standard attachments and rollers						Approx. weight kg/m		Attachment weight (kg/pc).					Roller allowable load (kgf/pc).	
Chain size	Roller type	A1 K1	A2 K2	A3 K3	SA2 SK2	GA2 GK2	G4	BR-roller	BF-roller	A2 SA2	A3	K2 SK2	K3	G4	BR	BF
DK 19200	**BR,BF**	—	BR,BF	—	BR	BR,BF	—	11.5	12.1	0.49	—	0.98	—	—	475	355
DK 19250	**BR,BF**	—	BR,BF	—	BR	BR,BF	—	10.3	10.8	0.69	—	1.38	—	—		
DK 19300	**BR,BF**	—	BR,BF	—	—	BR,BF	—	9.5	10.0	0.89	—	1.78	—	—		

Note: 1. The dimensions of the standard and heavy duty chains are the same, but heavy duty chains are made of high strength and structural steel, and are suitable when higher safety rate, strength or wear resistance is required.
2. With Attachment GA2 and GK2, check the bolt length limits shown above.
3. Roller allowable load depends on the tension resistance of the rail. The values in the table were calculated with a rail made of a material with 400N/mm².

Dimensional Drawings: DK 25200, DK 25250 and DK 25300 (for Metric series)

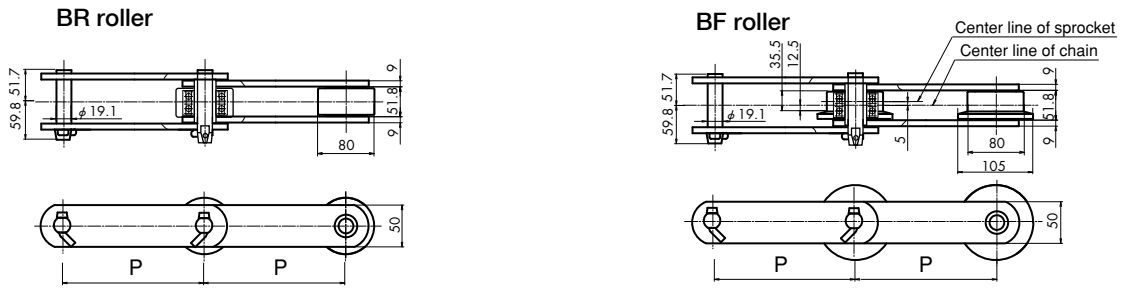

Attachment

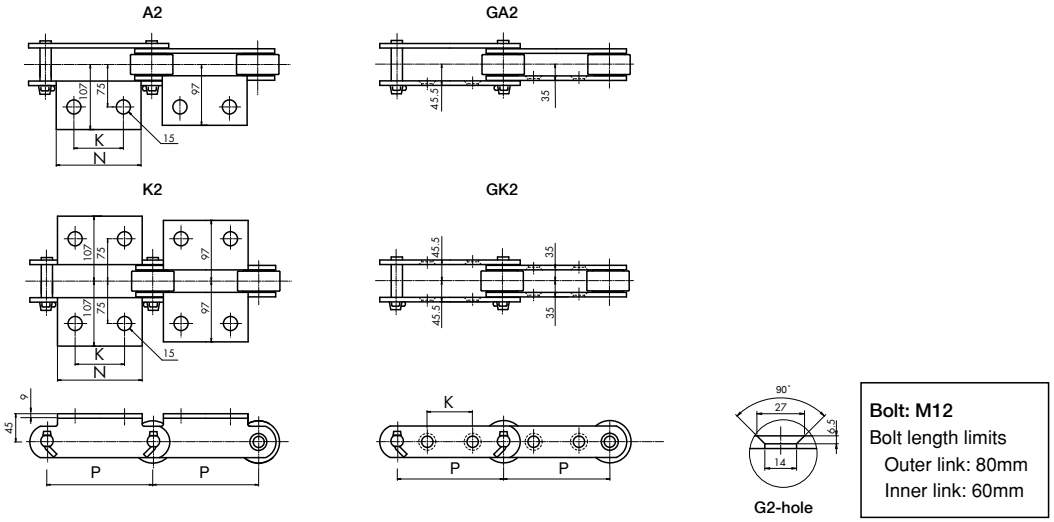

Chain No.		Avg. tensile strength kN (kgf)		Pitch	Standard attachments										
Chain size	Roller type	Standard **A,J**	Heavy duty **K,E**	P	A1・K1	A2・K2		A3・K3		SA2・SK2		GA2・GK2	G4		
					N	N	K	N	K	N	K	K	K	Y	B
DK 25200	**BR,BF**	245 (25,000)	392 (40,000)	200	—	120	80	—	—	—	—	70	—	—	—
DK 25250	**BR,BF**			250	—	170	125	—	—	—	—	110	—	—	—
DK 25300	**BR,BF**			300	—	220	180	—	—	—	—	150	—	—	—

Chain No.		Combination of standard attachments and rollers						Approx. weight kg/m		Attachment weight (kg/pc).					Roller allowable load (kgf/pc).	
Chain size	Roller type	A1 K1	A2 K2	A3 K3	SA2 SK2	GA2 GK2	G4	BR-roller	BF-roller	A2 SA2	A3	K2 SK2	K3	G4	BR	BF
DK 25200	**BR,BF**	—	BR,BF	—	—	BR,BF	—	18.2	19.5	0.63	—	1.26	—	—	845	635
DK 25250	**BR,BF**	—	BR,BF	—	—	BR,BF	—	15.9	17.0	0.90	—	1.80	—	—		
DK 25300	**BR,BF**	—	BR,BF	—	—	BR,BF	—	14.5	15.3	1.16	—	2.32	—	—		

Note: 1. The dimensions of the standard and heavy duty chains are the same, but heavy duty chains are made of high strength and structural steel, and are suitable when higher safety rate, strength or wear resistance is required.
2. With Attachment GA2 and GK2, check the bolt length limits shown above.
3. Roller allowable load depends on the tension resistance of the rail. The values in the table were calculated with a rail made of a material with 400N/mm².

Dimensional Drawings: DK 32200, DK 32250, DK 32300, and DK 32450 (for Metric series)

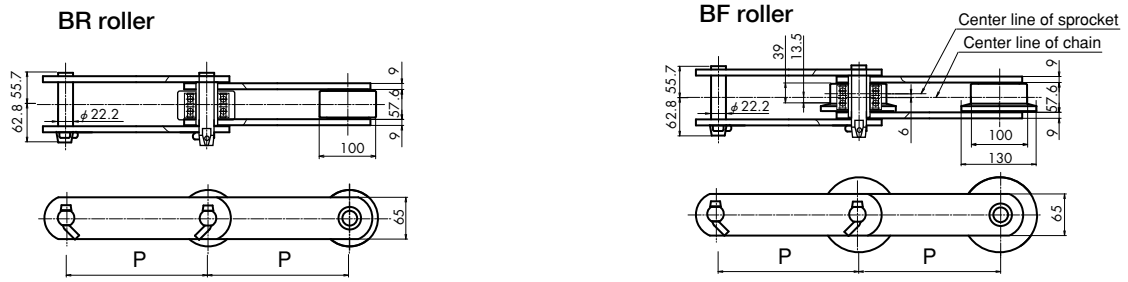

Attachment

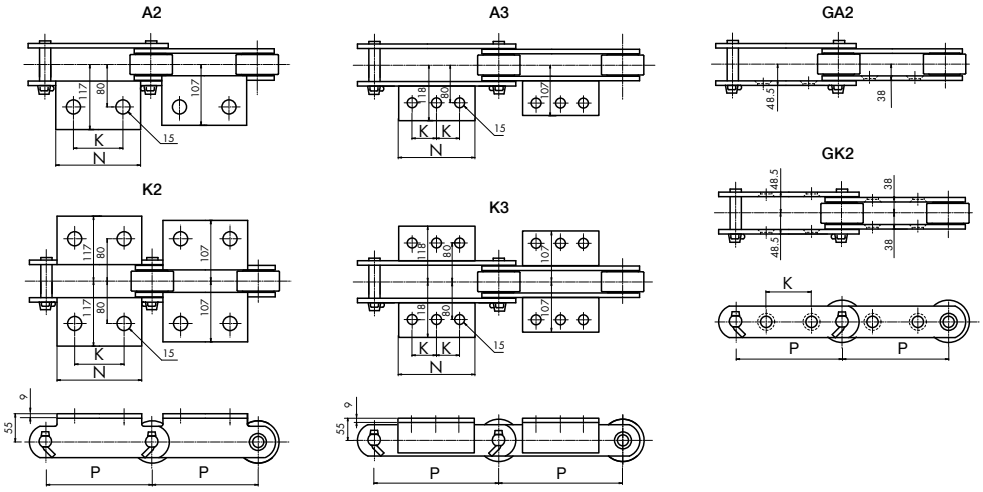

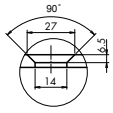

Bolt: M12
Bolt length limits
Outer link: 86mm
Inner link: 65mm

Chain No.		Avg. tensile strength kN (kgf)		Pitch	Standard attachments										
Chain size	Roller type	Standard **A,J**	Heavy duty **K,E**	P	A1・K1	A2・K2		A3・K3		SA2・SK2		GA2・GK2	G4		
					N	N	K	N	K	N	K	K	K	Y	B
DK 32200	**BR,BF**	313 (32,000)	500 (51,000)	200	120	—	—	—	—	—	—	70(40)	—	—	—
DK 32250	**BR,BF**			250	170	—	—	—	—	—	—	110(90)	—	—	—
DK 32300	**BR,BF**			300	220	—	—	—	—	—	—	140	—	—	—
DK 32450	**BR,BF**			450	—	330	140	—	—	—	—	220	—	—	—

Chain No.		Combination of standard attachments and rollers						Approx. weight kg/m		Attachment weight (kg/pc).					Roller allowable load (kgf/pc).	
Chain size	Roller type	A1 K1	A2 K2	A3 K3	SA2 SK2	GA2 GK2	G4	BR-roller	BF-roller	A2 SA2	A3	K2 SK2	K3	G4	BR	BF
DK 32200	**BR,BF**	—	BR,BF	—	—	BR,BF	—	28.2	30.2	0.72	—	1.44	—	—	1,240	930
DK 32250	**BR,BF**	—	BR,BF	—	—	BR,BF	—	24.6	26.2	1.01	—	2.02	—	—		
DK 32300	**BR,BF**	—	BR,BF	—	—	BR,BF	—	22.0	23.4	1.31	—	2.62	—	—		
DK 32450	**BR,BF**	—	—	BR,BF	—	BR,BF	—	17.8	18.7	—	1.97	—	3.97	—		

Note: 1. The dimensions of the standard and heavy duty chains are the same, but heavy duty chains are made of high strength and structural steel, and are suitable when higher safety rate, strength or wear resistance is required.
2. K dimensions in ( ) for Attachment GA2 and GK2 are for Roller BF.
3. With Attachment GA2 and GK2, check the bolt length limits shown above.
4. Attachment A3 and K3 are angle welding attachments.
5. Roller allowable load depends on the tension resistance of the rail. The values in the table were calculated with a rail made of a material with 400N/mm^2.

Dimensional Drawings: DK 50250, DK 50300, DK 50450, and DK 50600 (for Metric series)

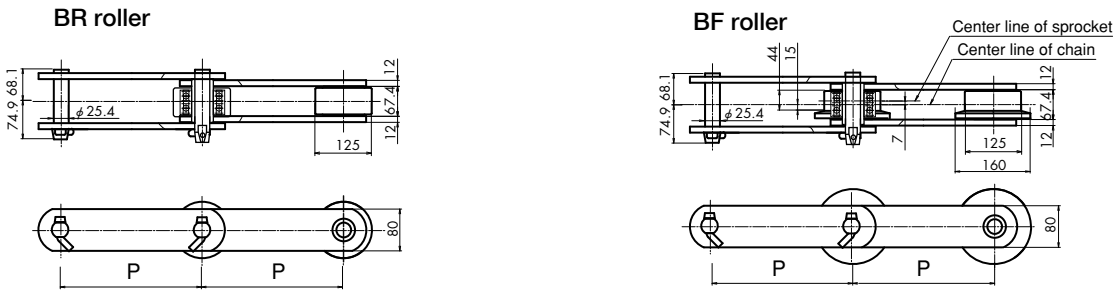

Attachment

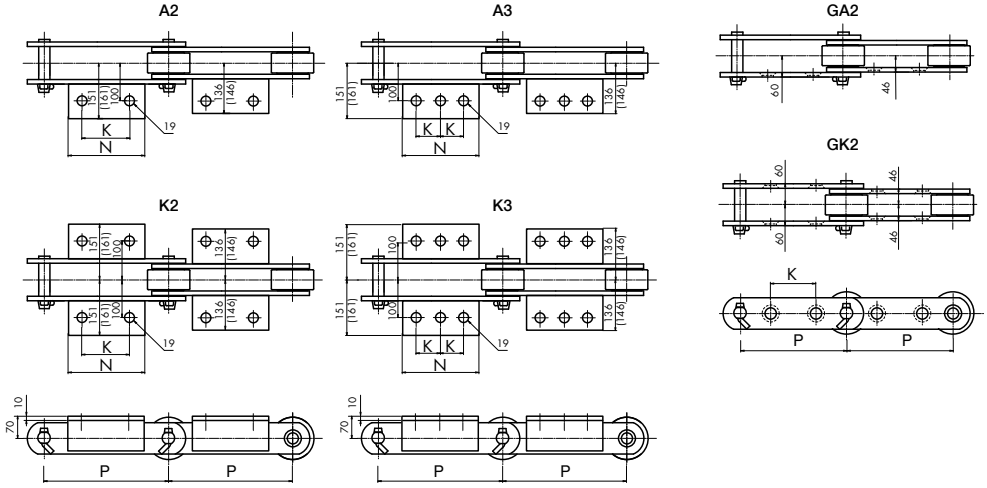

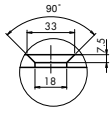

Bolt: M16
Bolt length limits
Outer link: 105mm
Inner link: 75mm

※ The dimensions of Attachment A3 and K3 in ( ) are for stainless steel types.

Chain No.		Avg. tensile strength kN (kgf)		Pitch	Standard attachments										
Chain size	Roller type	Standard **A,J**	Heavy duty **K,E**	P		A2・K2		A3・K3		SA2・SK2		GA2・GK2	G4		
					K	N	K	N	K	N	K	K	K	Y	B
DK 50250	**BR,BF**	490 (50,000)	686 (70,000)	250	—	170	125	—	—	—	—	90 (55)	—	—	—
DK 50300	**BR,BF**			300	—	220	180	—	—	—	—	140(105)	—	—	—
DK 50450	**BR,BF**			450	—	—	—	330	140	—	—	220	—	—	—
DK 50600	**BR,BF**			600	—	—	—	410	180	—	—	300	—	—	—

Chain No.		Combination of standard attachments and rollers						Approx. weight kg/m		Attachment weight (kg/pc).					Roller allowable load (kgf/pc).	
Chain size	Roller type	A1 K1	A2 K2	A3 K3	SA2 SK2	GA2 GK2	G4	BR-roller	BF-roller	A2 SA2	A3	K2 SK2	K3	G4	BR	BF
DK 50250	**BR,BF**	—	BR,BF	—	—	BR,BF	—	42.7	45.8	2.26	—	4.52	—	—	1,695	1,265
DK 50300	**BR,BF**	—	BR,BF	—	—	BR,BF	—	38.0	40.4	2.93	—	5.86	—	—		
DK 50450	**BR,BF**	—	—	BR,BF	—	BR,BF	—	30.3	31.9	—	4.39	—	8.78	—		
DK 50600	**BR,BF**	—	—	BR,BF	—	BR,BF	—	26.7	28.0	—	5.45	—	10.90	—		

Note: 1. The dimensions of the standard and heavy duty chains are the same, but heavy duty chains are made of high strength and structural steel, and are suitable when higher safety rate, strength or wear resistance is required.
2. K dimensions in ( ) for Attachment GA2 and GK2 are for Roller BF.
3. With Attachment GA2 and GK2, check the bolt length limits shown above.
4. Attachment A3 and K3 are angle welding attachments.
5. Roller allowable load depends on the tension resistance of the rail. The values in the table were calculated with a rail made of a material with 400N/mm².

Dimensional Drawings: DK 11152 (for Inch series)

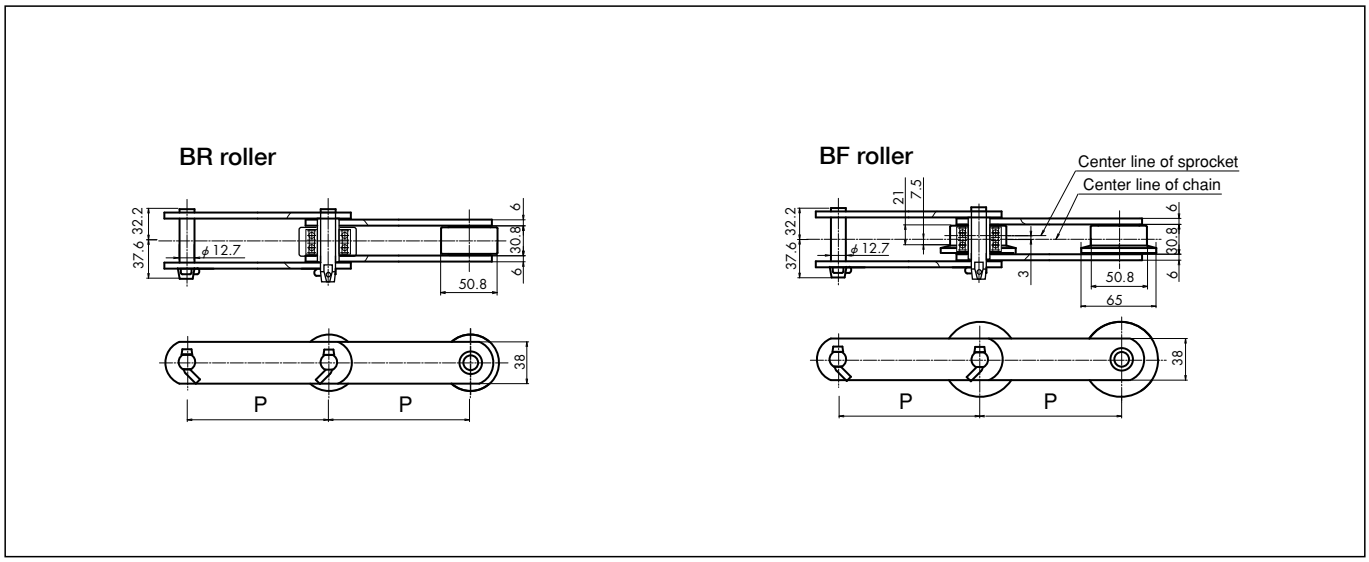

Attachment

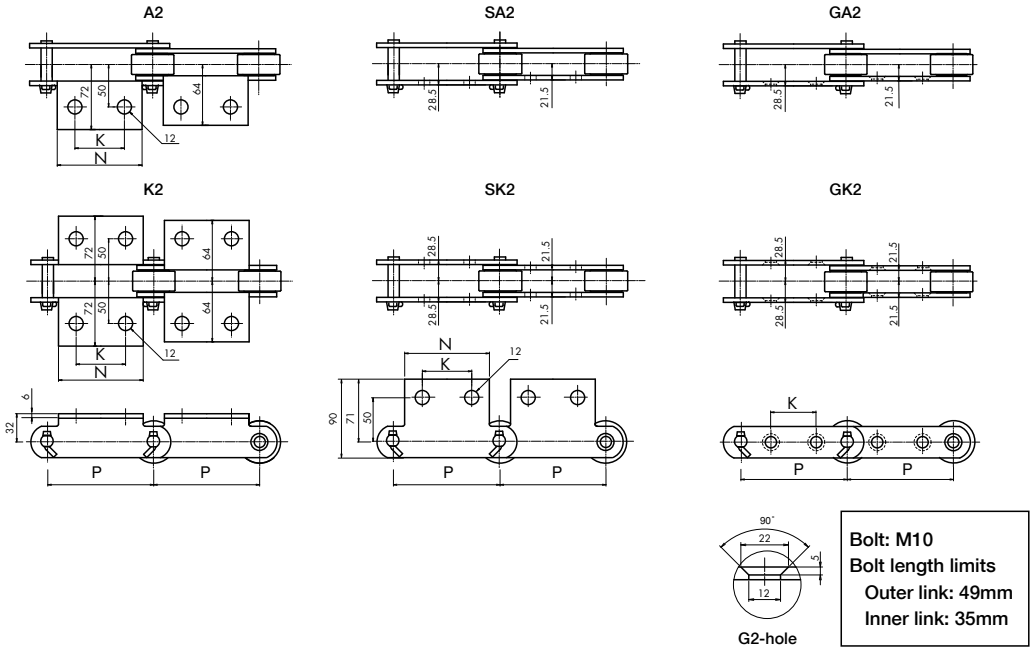

Chain No.		Avg. tensile strength kN (kgf)		Pitch	Standard attachments										
Chain size	Roller type	Standard **A,J**	Heavy duty **K,E**	P		A2・K2		A3・K3		SA2・SK2		GA2・GK2	G4		
					K	N	K	N	K	N	K	K	K	Y	B
DK 11152	**BR,BF**	112 (11,500)	171 (17,500)	152.4	—	90	60	—	—	—	—	60	—	—	—

Chain No.		Combination of standard attachments and rollers						Approx. weight kg/m		Attachment weight (kg/pc).					Roller allowable load (kgf/pc).	
Chain size	Roller type	A1 K1	A2 K2	A3 K3	SA2 SK2	GA2 GK2	G4	BR-roller	BF-roller	A2 SA2	A3	K2 SK2	K3	G4	BR	BF
DK 11152	**BR,BF**	—	BR,BF	—	BR	BR,BF	—	7.4	7.9	0.22	—	0.44	—	—	335	245

Note: 1. The dimensions of the standard and heavy duty chains are the same, but heavy duty chains are made of high strength and structural steel, and are suitable when higher safety rate, strength or wear resistance is required.
2. With Attachment GA2 and GK2, check the bolt length limits shown above.
3. Roller allowable load depends on the tension resistance of the rail. The values in the table were calculated with a rail made of a material with 400N/mm².

Dimensional Drawings: DK 19152 (for Inch series)

BR roller

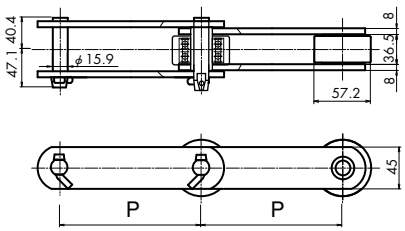

BF roller

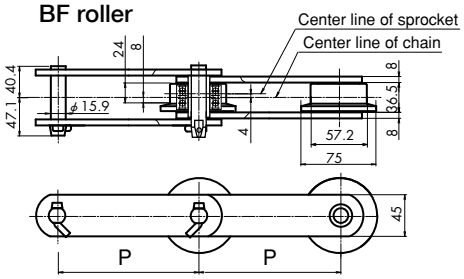

Attachment

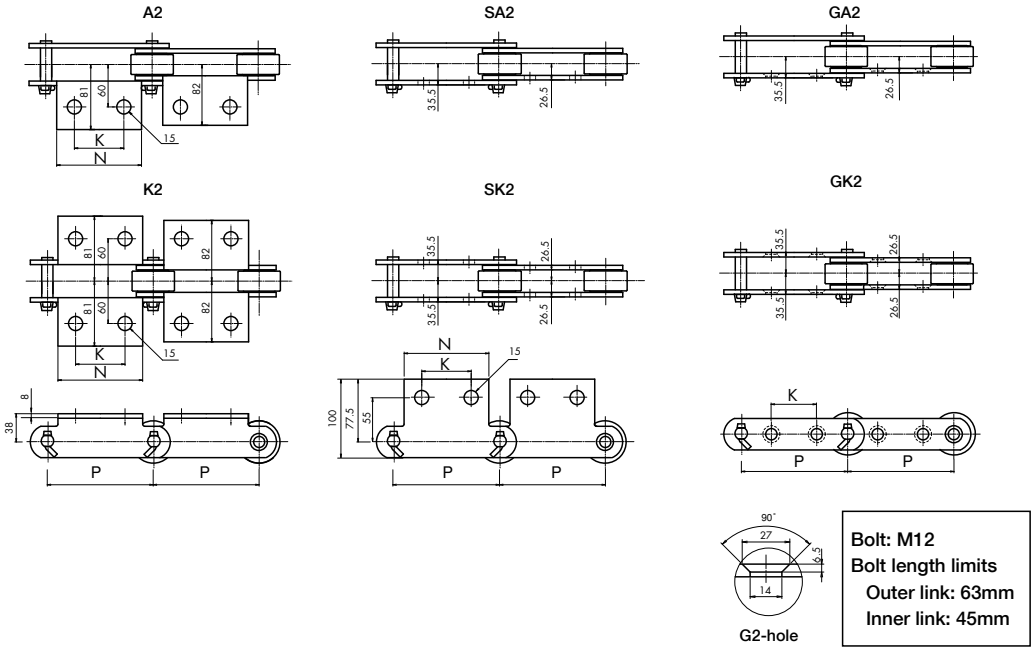

Bolt: M12
Bolt length limits
Outer link: 63mm
Inner link: 45mm

Chain No.		Avg. tensile strength kN (kgf)		Pitch	Standard attachments										
Chain size	Roller type	Standard A,J	Heavy duty K,E	P		A2・K2		A3・K3		SA2・SK2		GA2・GK2	G4		
					K	N	K	N	K	N	K	K	K	Y	B
DK 19152	**BR,BF**	186 (19,000)	279 (28,500)	152.4	—	100	60	—	—	100	60	50	—	—	—

Chain No.		Combination of standard attachments and rollers						Approx. weight kg/m		Attachment weight (kg/pc).					Roller allowable load (kgf/pc).	
Chain size	Roller type	A1 K1	A2 K2	A3 K3	SA2 SK2	GA2 GK2	G4	BR-roller	BF-roller	A2 SA2	A3	K2 SK2	K3	G4	BR	BF
DK 19152	**BR,BF**	—	BR,BF	—	BR	BR,BF	—	11.8	12.2	0.41	—	0.82	—	—	420	315

Note: 1. The dimensions of the standard and heavy duty chains are the same, but heavy duty chains are made of high strength and structural steel, and are suitable when higher safety rate, strength or wear resistance is required.
2. With Attachment GA2 and GK2, check the bolt length limits shown above.
3. Roller allowable load depends on the tension resistance of the rail. The values in the table were calculated with a rail made of a material with 400N/mm².

Dimensional Drawings: DK 25152 (for Inch series)

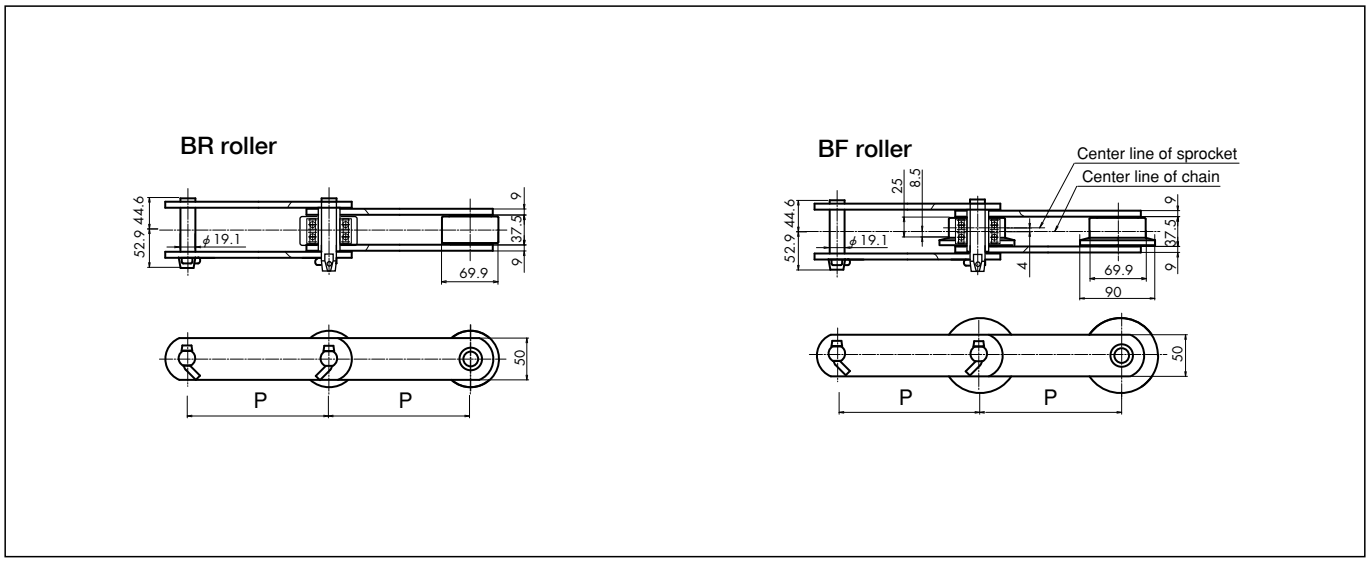

Attachment

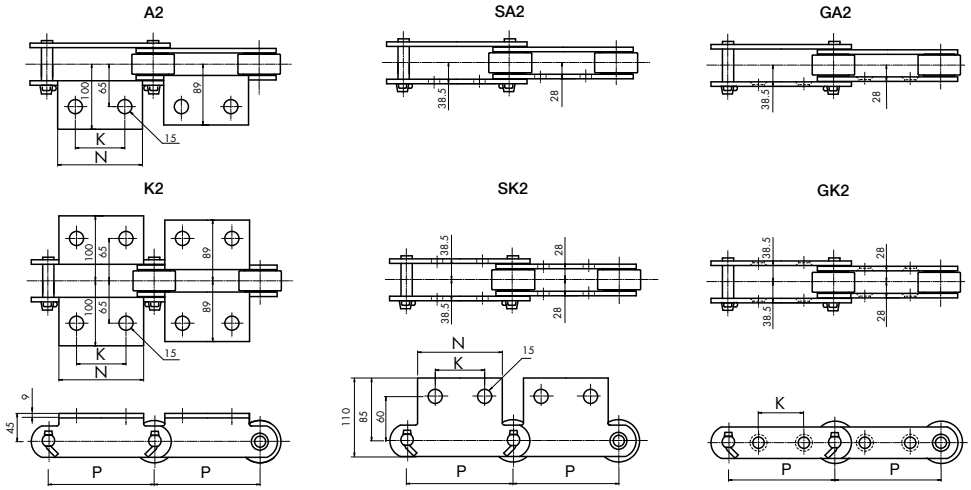

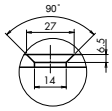

G2-hole

Bolt: M12
Bolt length limits
Outer link: 63mm
Inner link: 45mm

Chain No.		Avg. tensile strength kN (kgf)		Pitch	Standard attachments										
Chain size	Roller type	Standard **A,J**	Heavy duty **K,E**	P	A2・K2		A3・K3		SA2・SK2		GA2・GK2	G4			
					K	N	K	N	K	N	K	K	K	Y	B
DK 25152	**BR,BF**	245 (25,000)	392 (40,000)	152.4	—	100	60	—	—	100	60	55(35)	—	—	—

Chain No.		Combination of standard attachments and rollers						Approx. weight kg/m		Attachment weight (kg/pc).					Roller allowable load (kgf/pc).	
Chain size	Roller type	A1 K1	A2 K2	A3 K3	SA2 SK2	GA2 GK2	G4	BR-roller	BF-roller	A2 SA2	A3	K2 SK2	K3	G4	BR	BF
DK 25152	**BR,BF**	—	BR,BF	—	BR	BR,BF	—	16.4	17.3	0.53	—	1.06	—	—	545	400

Note: 1. The dimensions of the standard and heavy duty chains are the same, but heavy duty chains are made of high strength and structural steel, and are suitable when higher safety rate, strength or wear resistance is required.
2. K dimensions in ( ) Attachment GA2 and GK2 are for Roller BF.
3. With Attachment GA2 and GK2, check the bolt length limits shown above.
4. Roller allowable load depends on the tension resistance of the rail. The values in the table were calculated with a rail made of a material with 400N/mm².

Sealed Chain

By placing a seal ring between the inner and outer plates, this conveyor chain has grease enclosed between the pins and bushings. Chain endurance is significantly improved with this design as friction between the pins and the bushings is substantially lowered.

- ○ Heat resistance of seal rings is approx. 80°C.
- ○ Sprockets for Standard Conveyor Chains can be used.
- ○ Various attachments are available upon request.

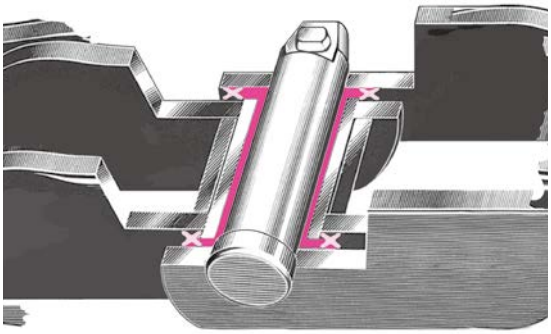

Application examples

- ○ Equipment with tendency to elongate chains.
- ○ Equipment used in severe circumstances.
- ○ Maintenance-free is needed.
- ○ Conveyor lines, construction machinery.

Comparison of Wear Resistance (no lubrication during testing)

● Comparison of Wear Resistance (no lubrication during testing)

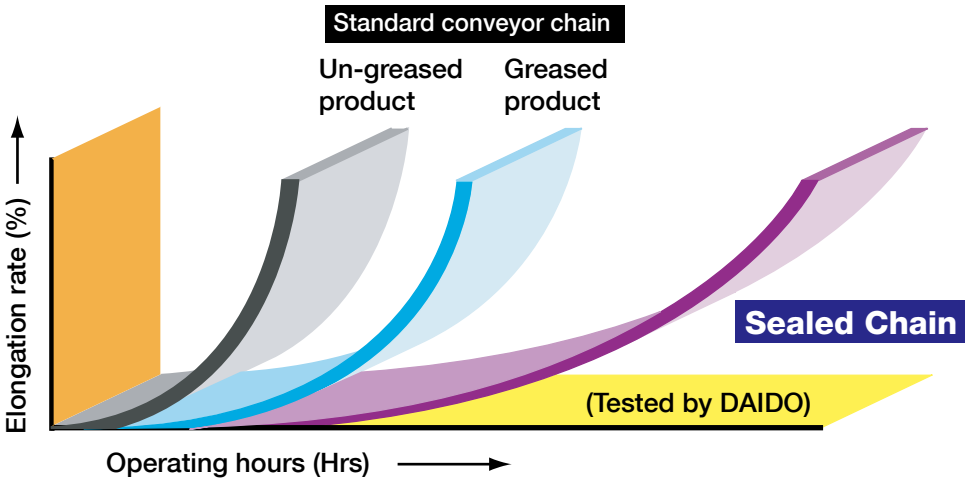

- ○ By lubricating the Sealed Chain from time to time, chain life can be further lengthened and the effects of rust resistance can be expected as well. Applicable lubrication oil: SAE30 to SAE40
  Do not use gasoline, phosphate ester hydraulic fluids, and chemicals such as benzol, trichlene, and acetone, as they may damage the seal rings.

Dimensional Drawings: Sealed Chains

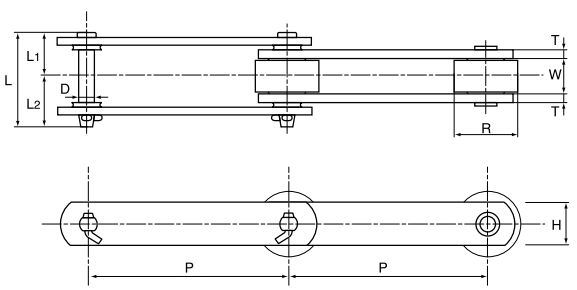

R roller

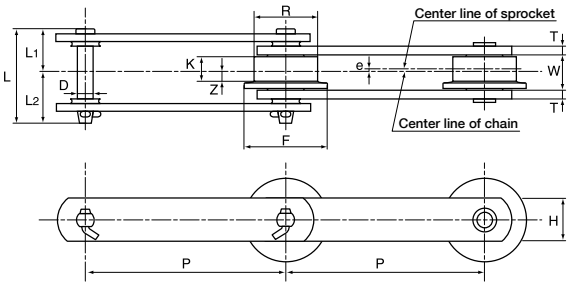

F roller

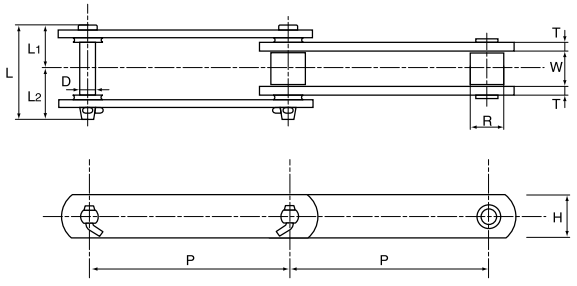

S roller

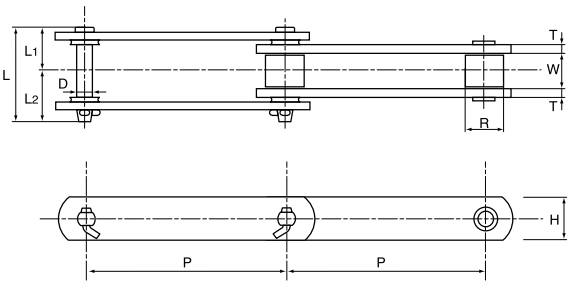

M roller

Chain No.		Avg. tensile strength kN (kgf)		Pitch	Width	R-roller	F-roller					S-roller	M-roller	Pin				Plate		Approx. weight kg/m			
Chain size	Roller type	Standard **A,J**	Heavy duty **K,E**	P	W	R	R	F	K	e	Z	R	R	D	L	L1	L2	T	H	R-roller	F-roller	S-roller	M-roller
DK 19200V	**R,F,S,M**	186 (19,000)	250 (25,500)	200	36.5	65	65	85	24	4	8	34.9	38.1	15.9	94.3	43.8	50.5	8	45	11.6	12.2	8.5	8.7
DK 19250V	**R,F,S,M**			250																10.4	10.9	8.0	8.2
DK 19300V	**R,F,S,M**			300																9.6	10.1	7.6	7.9
DK 25200V	**R,F,S,M**	245 (25,000)	353 (36,000)	200	51.8	80	80	105	35.5	5	12.5	40.1	44.5	19.1	117.9	54.9	63.0	9	50	18.3	19.6	11.5	12.0
DK 25250V	**R,F,S,M**			250																16.0	17.1	10.7	11.1
DK 25300V	**R,F,S,M**			300																14.6	15.4	10.0	10.4
DK 19152V	**R,F,S,M**	186 (19,000)	250 (25,500)	152.4	36.5	57.2	57.2	75	24	4	8	34.9	38.1	15.9	94.3	43.8	50.5	8	45	11.9	12.3	9.2	9.5
DK 25152V	**R,F,S,M**	245 (25,000)	353 (36,000)	152.4	37.5	69.9	69.9	90	25	4	8.5	40.1	44.5	19.1	103.9	47.8	56.1	9	50	16.5	17.4	12.1	12.7

Note: 1. The avg. tensile strength of the heavy duty chain is about 90% of the Standard Conveyor Chain.
2. Sprockets for Standard Conveyor Chain can be used.
3. The heat resistance of the seal rings is about 80°C.
4. Consult us for sizes not mentioned above, heat resistance higher than 80°C, or other options like adding grease holes to pins.
5. Ask us for delivery time.

Strong H type and Z type Conveyor Chain

This chain was developed for heavy load conveyance such as for large bucket elevators and flow conveyors. Larger bearing areas are taken for the pins, bushings, and rollers compared to those of Standard Conveyor Chains to improve wear resistance. In addition, the chain is manufactured with high precision to have high tensile strength, fatigue strength, and superb shock resistance. It is a premium large conveyor chain that can be used for a long duration.

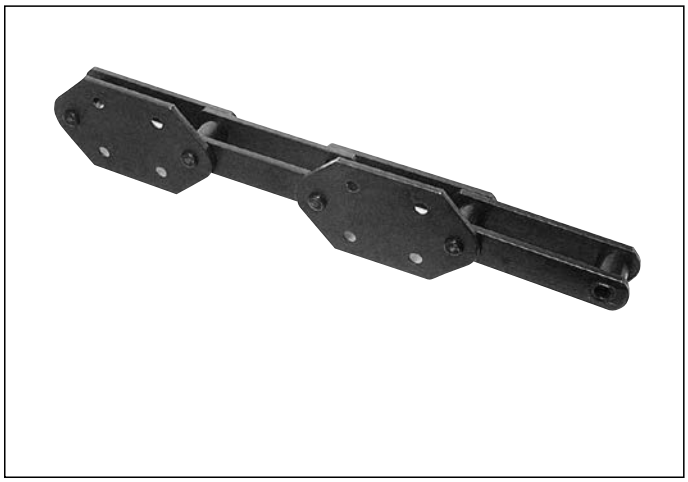

- ○ Strong H type is best for flow conveyor systems as the inner and outer plates have the same height.
- ○ Strong Z type is best for vertical conveyor systems as the inner and outer plates with elevated height exhibit greater strength.
- ○ Consult us for attachments other than standard G4.

Application examples

- ○ Large flow conveyor systems
- ○ Basket elevators
- ○ Multilevel parking machines

Table of applicable attachments

Chain No.	Attachments for specific use		
	Flow conveyor		
	L	KL	B
DK 35H200	○	○	○
DK 35H250	○	○	○
DK 50H200	◎	◎	◎
DK 50H225	○	○	○
DK 50H250	○	○	○
DK 50H300	○	○	○
DK 75H200	◎	◎	◎
DK 75H250	◎	◎	◎
DK 75H300	◎	◎	◎
DK 75H350	○	○	○
DK 100H250	◎	◎	◎
DK 100H300	◎	◎	◎
DK 100H350	◎	◎	◎
DK 120H250	○	○	○
DK 120H300	◎	◎	◎
DK 120H350	◎	◎	◎
DK 120H400	○	○	○
DK 140H300	○	○	○
DK 140H350	◎	◎	◎
DK 140H400	○	○	○
DK 160H300	○	○	○
DK 160H350	◎	◎	◎
DK 160H400	○	○	○
DK 200H350	○	○	○
DK 200H400	○	○	○
DK 200H450	○	○	○
DK 250H350	○	○	○
DK 250H400	○	○	○
DK 250H500	○	○	○

Chain No.	Standard attachment
	G4
DK 35Z200	◎
DK 35Z250	◎
DK 50Z200	◎
DK 50Z225	◎
DK 50Z250	◎
DK 50Z300	◎
DK 75Z200	◎
DK 75Z250	◎
DK 75Z300	◎
DK 75Z350	◎
DK 100Z250	◎
DK 100Z300	◎
DK 100Z350	◎
DK 120Z250	◎
DK 120Z300	◎
DK 120Z350	◎
DK 120Z400	◎
DK 140Z300	◎
DK 140Z350	◎
DK 140Z400	◎
DK 160Z300	◎
DK 160Z350	◎
DK 160Z400	◎
DK 200Z350	◎
DK 200Z400	◎
DK 200Z450	◎
DK 250Z350	◎
DK 250Z400	◎
DK 250Z500	◎

◎ : Standard product ○ : Nonstandard product
Note: Consult us for manufacturing nonstandard products or attachments not included in the above table.

Dimensional Drawings: Strong H type Conveyor Chain

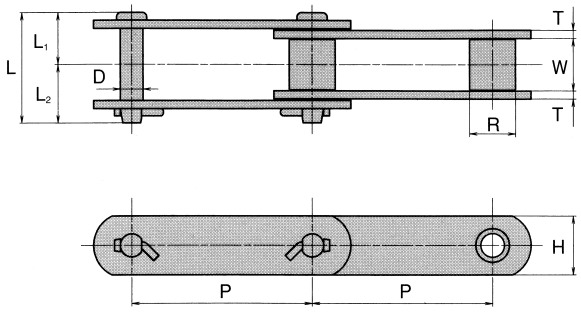

Strong H type

Chain No.	Avg. tensile strength kN (kgf)	Pitch	Roller link width	M roller	Pin				Plate		Approx. weight (kg/m)
		P	W	R	D	L	L1	L2	T	H	
DK 35H200M	323 (33,000)	200	51.8	44.5	22.2	114	53.8	60.2	9	50	12.2
DK 35H250M		250									11.2
DK 50H200M	490 (50,000)	200	57.6	50.8	25.4	121.5	57.3	64.2	9	65	17.0
DK 50H225M		225									16.2
DK 50H250M		250									15.5
DK 50H300M		300									14.5
DK 75H200M	735 (75,000)	200	67.4	63.5	31.75	148	70	78	12	80	30.0
DK 75H250M		250									27.0
DK 75H300M		300									25.0
DK 75H350M		350									23.7
DK 100H250M	980 (100,000)	250	75	70	35	174	83.2	90.8	16	90	41.2
DK 100H300M		300									38.2
DK 100H350M		350									35.9
DK 120H250M	1,176 (120,000)	250	82.5	75	38.5	183.5	88	95.5	16	100	48.6
DK 120H300M		300									44.8
DK 120H350M		350									41.8
DK 120H400M		400									39.9
DK 140H300M	1,372 (140,000)	300	85	82	41.75	189.5	90.2	99.3	16	115	54.2
DK 140H350M		350									50.5
DK 140H400M		400									47.8
DK 160H300M	1,569 (160,000)	300	92.5	86	44.5	211.5	101.2	110.3	19	120	66.9
DK 160H350M		350									62.8
DK 160H400M		400									58.9
DK 200H350M	1,961 (200,000)	350	95	97	50.8	217.5	103.5	114	19	140	76.1
DK 200H400M		400									71.9
DK 200H450M		450									68.3
DK 250H350M	2,451 (250,000)	350	100	107	56	236	113	123	22	150	99.0
DK 250H400M		400									90.0
DK 250H500M		450									77.4

Note: 1. See the section of Chain for Continuous Flow Conveyor in the DK Specialty Conveyor Chain for the dimensions of the attachments for the flow conveyor.
2. Consult us for manufacturing other attachments and roller types.

Dimensional Drawings: Strong Z type Conveyor Chain with attachment

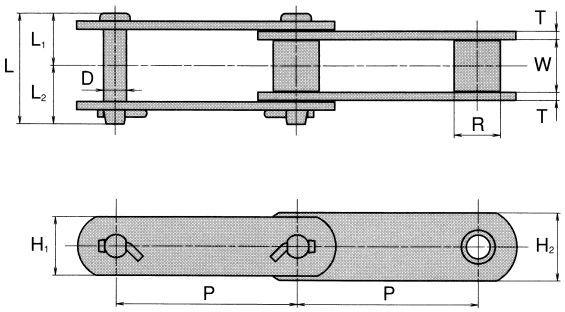

Strong Z type

Chain No.	Avg. tensile strength kN (kgf)	Pitch	Roller link width	M roller	Pin				Plate			Approx. weight (kg/m)
		P	W	R	D	L	L1	L2	T	H1	H2	
DK 35Z200M	392 (40,000)	200	51.8	44.5	22.2	114	53.8	60.2	9	50	57	12.7
DK 35Z250M		250										11.7
DK 50Z200M	588 (60,000)	200	57.6	50.8	25.4	121.5	57.3	64.2	9	65	75	17.7
DK 50Z225M		225										16.9
DK 50Z250M		250										16.2
DK 50Z300M		300										15.2
DK 75Z200M	931 (95,000)	200	67.4	63.5	31.75	148	70	78	12	80	90	31.2
DK 75Z250M		250										28.0
DK 75Z300M		300										26.0
DK 75Z350M		350										24.6
DK 100Z250M	1,225 (125,000)	250	75	70	35	174	83.2	90.8	16	90	100	42.5
DK 100Z300M		300										39.5
DK 100Z350M		350										37.2
DK 120Z250M	1,470 (150,000)	250	82.5	75	38.5	183.5	88	95.5	16	100	115	50.6
DK 120Z300M		300										46.8
DK 120Z350M		350										43.7
DK 120Z400M		400										41.6
DK 140Z300M	1,667 (170,000)	300	85	82	41.75	189.5	90.2	99.3	16	115	125	55.5
DK 140Z350M		350										51.8
DK 140Z400M		400										49.1
DK 160Z300M	1,863 (190,000)	300	92.5	86	44.5	211.5	101.2	110.3	19	120	130	68.4
DK 160Z350M		350										63.8
DK 160Z400M		400										60.3
DK 200Z350M	2,255 (230,000)	350	95	97	50.8	217.5	103.5	114	19	140	150	77.5
DK 200Z400M		400										73.3
DK 200Z450M		450										70.0
DK 250Z350M	2,843 (290,000)	350	100	107	56	236	113	123	22	150	165	101.6
DK 250Z400M		400										92.5
DK 250Z500M		450										79.8

Dimensional Drawings: Strong Z type Conveyor Chain with Attachment G4

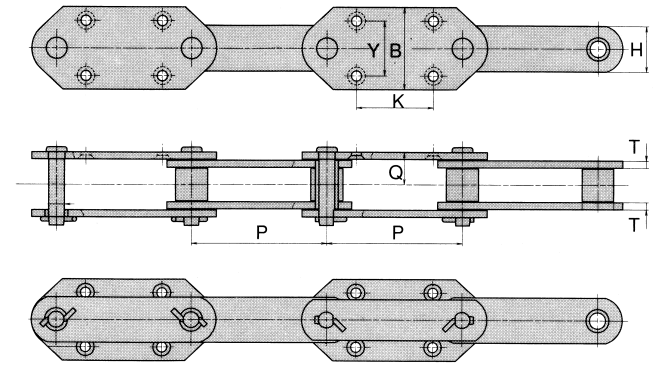

Connecting link (DK100Z or larger)

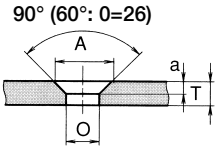

G4 hole

Chain No.	P	K	Y	B	O	A	a	T	Q	H	Bolt	Attachment weight (kg/pc.)
DK 35Z200M	200	100	80	125	14	27	6.5	9	45.5	57	M12	1.04
DK 35Z250M	250	140	100	150								1.65
DK 50Z200M	200	100	80	125	18	33	7.5	9	48.5	75	M16	0.92
DK 50Z225M	225	120	80	125								1.04
DK 50Z250M	250	140	100	150								1.50
DK 50Z300M	300	170	100	150								1.80
DK 75Z200M	200	100	80	125	18	33	7.5	12	60	90	M16	0.92
DK 75Z250M	250	140	100	150								1.75
DK 75Z300M	300	170	100	150								2.10
DK 75Z350M	350	225	100	150								2.45
DK 100Z250M	250	140	100	150	18	33	7.5	16	72	100	M16	2.40
DK 100Z300M	300	170	120	180	22	39	8.5				M20	3.66
DK 100Z350M	350	225	120	180	22	39	8.5				M20	4.20
DK 120Z250M	250	140	120	180	18	33	7.5	16	76	115	M16	2.80
DK 120Z300M	300	170	120	180	22	39	8.5				M20	3.30
DK 120Z350M	350	225	120	180	22	39	8.5				M20	3.85
DK 120Z400M	400	260	140	210	22	39	8.5				M20	5.68
DK 140Z300M	300	170	140	210	26	42.2	14	16	77	125	M24	3.90
DK 140Z350M	350	225										4.48
DK 140Z400M	400	260										5.04
DK 160Z300M	300	170	140	210	26	42.2	14	19	87	130	M24	4.38
DK 160Z350M	350	225										5.04
DK 160Z400M	400	260										5.68
DK 200Z350M	350	200	180	250	26	42.2	14	19	88.5	150	M24	6.51
DK 200Z400M	400	260										7.44
DK 200Z450M	450	290										8.37
DK 250Z350M	350	200	180	250	26	42.2	14	22	97	165	M24	6.37
DK 250Z400M	400	260										7.36
DK 250Z500M	500	320										8.35

Note: Consult us for manufacturing other attachments and roller types.

High Link Plate Chain

This chain is the same as the Standard Conveyor Chain with R rollers except for high height plates. Loads can be set directly on these high plates.

Application examples

- ○ Conveyor lines for loads such as plate material or shaped steel in industrial plants like steel mills.
- ○ Assembly lines for automobiles etc.
- ○ Pallets and conveyor lines for bulk containers.

Dimensional Drawings: High Link-Plate Chain

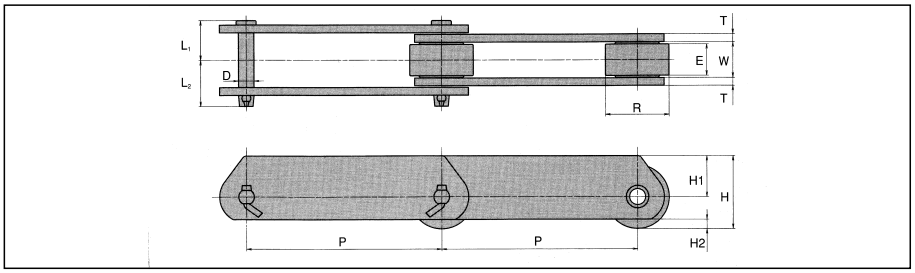

Unit (mm)

Chain No.	Avg. tensile strength				Pitch	Width	Roller		Chain height	Plate			Pin			Roller allowable load kN/pc. (kgf/pc.)		Avg. weight (kg/m)
	Standard		Heavy duty				Diameter	Width		Thickness	Height	Height						
	kN	kgf	kN	kgf	P	W	R	E	H	T	H_1	H_2	D	L_1	L_2	J-type	Normal/ Heavy duty	
DK-HL03075R					75													3.2
DK-HL03100R	34.3	3,500	69.3	7,100	100	15.9	30	14.6	36	3.2 (3)	21	4	7.94	16.7	20.4	0.53 (55)	0.88 (90)	2.7
DK-HL03125R					125													2.5
DK-HL07075R					75													6.2
DK-HL07100R	68.6	7,000	132	13,500	100	22.0	40	19	44	4.5 (4)	24	4	11	23.7	27.7	0.98 (100)	1.56 (160)	5.6
DK-HL07125R					125													5.2
DK-HL09100R					100													8.4
DK-HL09125R	88.2	9,000	156	16,000	125	25.6	45	22	50.5	6	28	6.5	12	29.6	34.5	1.37 (140)	2.25 (230)	7.6
DK-HL09150R					150													7.0
DK-HL11100R					100													10.9
DK-HL11125R	112	11,500	225	23,000	125	30.6	50	27	56	6	31	6	14	32.6	38.0	1.76 (180)	2.94 (300)	9.7
DK-HL11150R					150													8.8
DK-HL19200R					200													14.2
DK-HL19250R	186	19,000	279	28,500	250	36.5	65	32	74.5	8	42	9.5	15.9	40.4	47.1	2.45 (250)	4.11 (420)	12.9
DK-HL19300R					300													12.1
DK-HL25200R					200													22.2
DK-HL25250R	245	25,000	392	40,000	250	51.8	80	46	90	9	50	15	19.1	51.7	59.8	4.31 (440)	7.15 (730)	19.8
DK-HL25300R					300													18.3
DK-HL32200R					200													32.1
DK-HL32250R	313	32,000	500	51,000	250	57.6	100	51	107	9	57	17	22.2	55.7	62.8	5.39 (550)	8.92 (910)	28.4
DK-HL32300R					300													25.7
DK-HL50250R					250													49.0
DK-HL50300R	490	50,000	686	70,000	300	67.4	125	58	132.5	12	70	22.5	25.4	68.1	74.9	7.45 (760)	12.3 (1,260)	44.2
DK-HL50450R					450													36.3
DK-HL05101R	53.9	5,500	98	10,000	101.6	22.2	38.1	19	44	4.5	25	4	9.7	23.3	27.3	0.98 (100)	1.66 (170)	5.1
DK-HL08101R	78.4	8,000	142	14,500	101.6	27.6	44.5	24	50.2	6	28	6.2	11.3	30.1	35.0	1.27 (130)	2.15 (220)	8.4
DK-HL11152R	112	11,500	171	17,500	152.4	30.8	50.8	27	56.4	6	31	6.4	12.7	32.2	37.6	1.66 (170)	2.84 (290)	8.6
DK-HL13101R	127	13,000	240	24,500	101.6	31.0	44.5	27	53.5	8	31	3.5	15.9	37.6	44.4	2.05 (210)	3.43 (350)	12.0
DK-HL19152R	186	19,000	279	28,500	152.4	36.5	57.2	32	65.5	8	37	5.6	15.9	40.4	47.1	2.45 (250)	4.07 (410)	13.8
DK-HL25152R	245	25,000	392	40,000	152.4	37.5	69.9	33	79.9	9	45	10	19.1	44.6	52.9	3.04 (310)	5.09 (520)	19.6

Note: 1. T dimensions in ( ) are for stainless steel type. Dimensions in columns without ( ) apply to all types.
2. Pins of DK-HL03075~DK-HL-03125R are rivet type excluding the connecting parts.
3. Ask us for delivery time.

Conveyor Chain with Side Roller

This chain is made of a Standard Conveyor Chain with S rollers, longer pins and side rollers with flanges on both sides. Sprockets engage at the center of the roller and it runs by the side rollers. It can be manufactured with materials of a Standard Conveyor Chain.

For ordering

Specify the chain number and the interval between the chain and the side roller.

Application examples

- ○ When modifying plates into specific shapes for attaching devices like docks or top-plates.
- ○ When it is impossible to support the chain load at the center of the roller.
- ○ To steadily convey loads with high gravitational center.
- ○ When attaching uplift guides prevention on chains.

Dimensional Drawings: Conveyor Chain with Side Roller

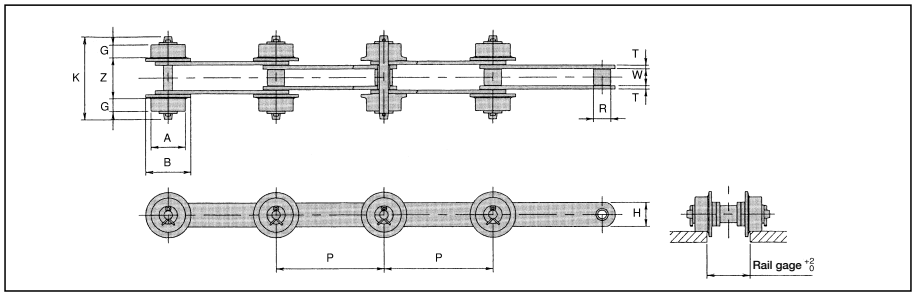

Unit (mm)

Chain No.	Pitch P	Roller (bush) dia. R	Roller link width W	Plate Thickness T	Plate Width H	Side roller A	Side roller B	Side roller G	K	Z	Rail gage	Approx. additional weight per side roller (kg/pc.)
DK 03075S-SR	75	15.9	15.9	3.2	22.2	30	40	12	76	38	40	0.3
DK 03100S-SR	100											
DK 05101S-SR	101.6	20.1	22.2	4.5	25.4	40	50	15	102	55	57	0.6
DK 07075S-SR	75	22.2	22	4.5	32	40	50	15	102	55	57	0.6
DK 07100S-SR	100											
DK 07150S-SR	150											
DK 08101S-SR	101.6	22.2	27.6	6	28.6	45	60	16	120	70	72	0.8
DK 11100S-SR	100	28.8	30.6	6	38	50	65	20	133	75	77	1.2
DK 11150S-SR	150											
DK 19152S-SR	152.4	34.9	36.5	8	45	60	80	24	165	92	94	1.8
DK 19200S-SR	200	34.9	36.5	8	45	65	85	24	165	92	94	2.0
DK 19250S-SR	250											
DK 25200S-SR	200	40.1	51.8	9	50	65	85	24	186	112	114	2.0
DK 25250S-SR	250											
DK 25300S-SR	300											
DK 32200S-SR	200	44.5	57.6	9	65	80	100	35.5	222	124	126	4.8
DK 32250S-SR	250											
DK 32300S-SR	300											
DK 50250S-SR	250	50.8	67.4	12	80	100	125	39	260	150	152	8.4
DK 50300S-SR	300											
DK 50450S-SR	450											

Note: 1. The basic specifications of the chain are identical to that of Standard Conveyor Chain.
2. Ask us for delivery time.

Conveyor Chain with Top Roller

As shown in the figure, rollers are attached on the top of the chain for conveying pallets loaded with products. The pallets travel with the roller, but can be stopped by stoppers. The chain continues to run but the top rollers run idle; commonly known as the "Chain for free flow conveyor". There are two types to the Conveyor Chain with Top Roller: TR1 and TR2. The chain is based on a Standard Conveyor Chain.

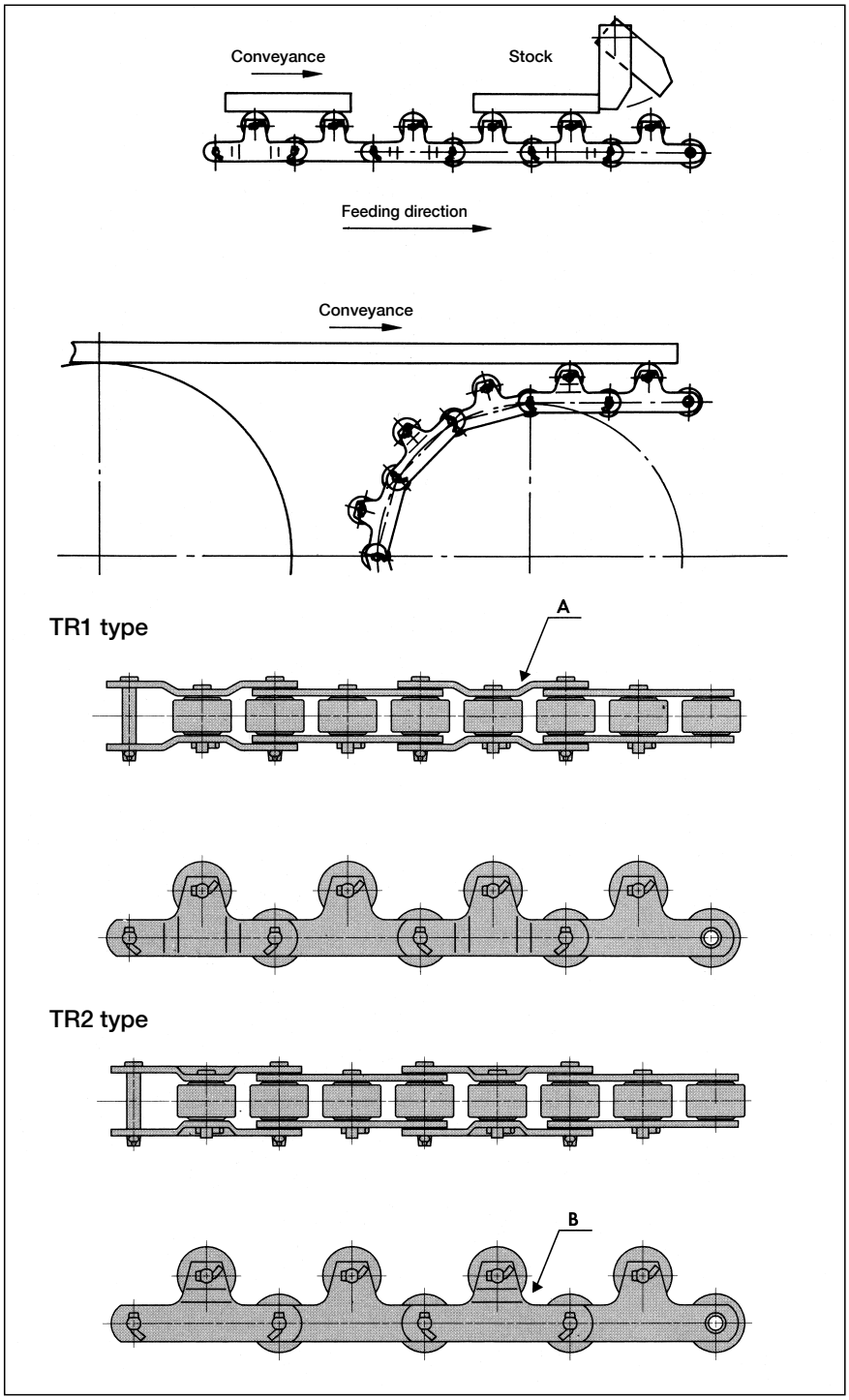

TR1 type: Plates are bent at A as shown in the figure to unify the space between the facing plates to the width of the top roller.
TR2 type: Plates bent at B as shown in the figure.

Conveyor Chain for Specific Conveyance

The previous section describes that by combining with various attachments, the DK Conveyor Chains can be used for almost all general applications. This section describes the DK Specialty Conveyor Chains developed based on the Standard Conveyor Chain. Specialty Conveyor Chains offer improved form, size series and material advantages that suit respective applications. They can be classified into three types: Specialized Application Conveyor Chain, Water Treatment Conveyor Chain, and 3D Bending Conveyor Chain.

Conveyor Chain with Attachments for Conveying Bulk Materials

Continuous Flow Conveyor Chain and Chain for Dust Conveyor

As shown in the photo, a chain with blades is operated in a powder to cause the powder to flow in the same direction as the feeding direction of the chain. This is called a Continuous Flow Conveyor Chain. The same type of chain is also used in a similar way for discharging the dust generated by various dust collectors. We manufacture 25 types of Standard Conveyor Chains with blades, two types of Block Chains with blades (P.284), respectively suitable for the various properties of dusts and powders, and five chains with special cast steel blades for conveying powders likely to cause wear. The respective chains are designated as follows:

Standard Conveyor Chains with blades	→	Continuous Flow Conveyor Chain or Chain for Dust Conveyor
Block Chains with blades	→	Block Chain for Dust Conveyor
Chain with special cast steel blades	→	TA Type Drag Chain

We manufacture continuous flow conveyors and dust conveyors using the above chains with blades as standard equipment. Consult us for further details.

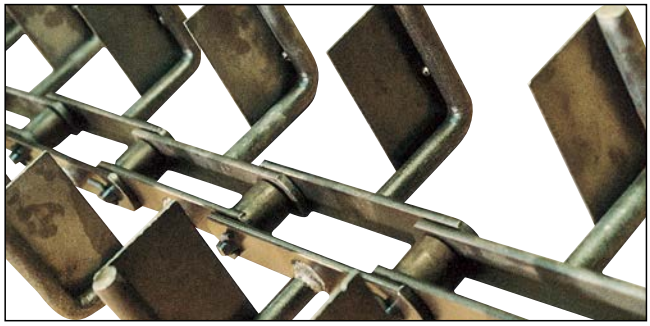

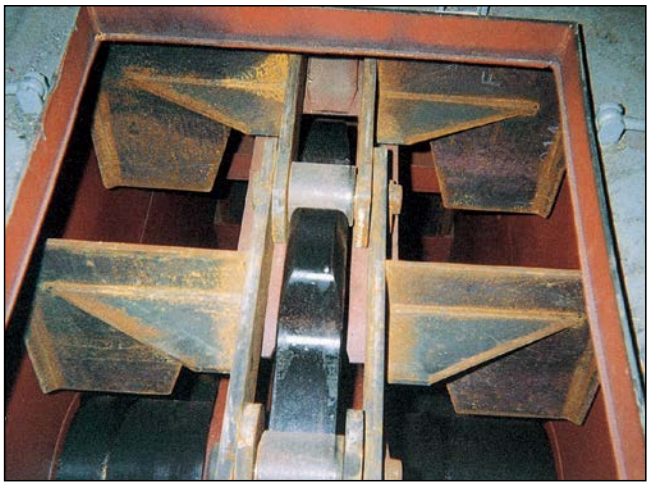

(a) Continuous Flow Conveyor Chain

Continuous Flow Conveyor Chains are used for our standard continuous flow conveyors. Depending on the conveyed subjects, the following three types of attachments are available. The basic chain can be either a Standard Conveyor Chain or a Strong H type Conveyor Chain.

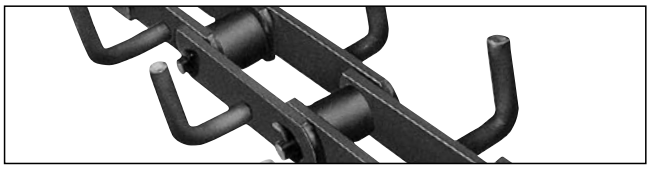

Type of attachment	Shape	Application
L	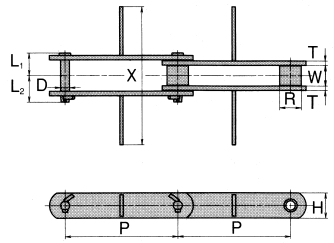	For the conveyance of bulk materials such as grain like wheat and powder like cement.
KL	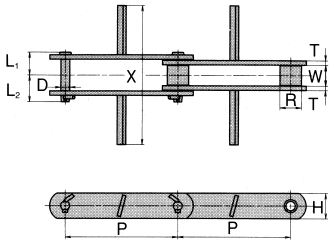	For the conveyance of adhesive bulk material.
B	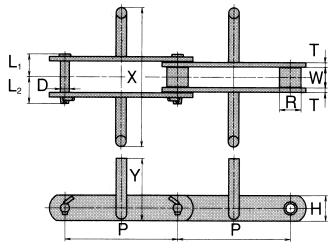	For the conveyance of bulk material like cement with higher feeding efficiency than L Attachment.

Unit (mm)

Chain No.	Type	Conveyor No.	Avg. tensile strength Standard A kN	Avg. tensile strength Standard A kgf	Avg. tensile strength Heavy-duty K kN	Avg. tensile strength Heavy-duty K kgf	Pitch P	Roller link width W	Roller outside dia. R	Pin D	Pin L_1	Pin L_2	Plate T	Plate H	Approx. weight without attachment (kg/m)	Attachment X	Attachment Y	Approx. weight with Attachment B (kg/m)	Approx. weight with Attachment L or KL (kg/m)
※**DK 09101S**	Standard	U-150	88.2	9,000	156	16,000	101.6	27.6	26.5	12.7	30.6	36	6	32	5.4	135	60	7.2	6.5
DK 19152S		U-200	186	19,000	279	28,500	152.4	36.5	34.9	15.9	40.4	47.1	8	45	9.1	175	80	11.6	11.2
DK 19200S		U-270	186	19,000	279	28,500	200	36.5	34.9	15.9	40.4	47.1	8	45	8.4	245	110	12.4	11.5
		U-350														325	140	15.5	12.7
DK 25200S		U-270	245	25,000	392	40,000	200	51.8	40.1	19.1	51.7	59.8	9	50	11.4	245	110	15.2	14.6
		U-350														325	140	18.5	15.7
		U-430														400	170	20.5	16.8
DK 32200S		U-350	313	32,000	500	51,000	200	57.6	44.5	22.2	55.7	62.8	9	65	15.5	325	140	22.5	22.6
		U-430														400	170	24.5	23.6
DK 32250S		U-500	313	32,000	500	51,000	250	57.6	44.5	22.2	55.7	62.8	9	65	14.4	470	200	25.6	23.5
DK 50250S		U-500	490	50,000	686	70,000	250	67.4	50.8	25.4	68.1	74.9	12	80	24.1	470	200	35.0	34.0
DK 50300S		U-600	490	50,000	686	70,000	300	67.4	50.8	25.4	68.1	74.9	12	80	22.4	570	240	33.8	33.1
DK 50H200M	Strong H type	U-430			490	50,000	200	57.6	50.8	25.4	57.3	64.2	9	65	17	400	170	26.1	22.4
DK 75H200M		U-430			735	75,000	200	67.4	63.5	31.75	70	78	12	80	30	400	170	39.0	35.3
DK 75H250M		U-500			735	75,000	250	67.4	63.5	31.75	70	78	12	80	27	470	200	37.9	36.9
DK 75H300M		U-600			735	75,000	300	67.4	63.5	31.75	70	78	12	80	25	570	240	36.4	37.3
DK 100H250M		U-500			980	100,000	250	75	70	35	83.2	90.8	16	90	41.2	470	200	51.9	51.0
DK 100H300M		U-600			980	100,000	300	75	70	35	83.2	90.8	16	90	38.2	570	240	49.5	50.3
DK 100H350M		U-700			980	100,000	350	75	70	35	83.2	90.8	16	90	35.9	670	280	50.2	49.7
DK 120H300M		U-600			1,176	120,000	300	82.5	75	38.5	88	95.5	16	100	44.8	570	240	55.8	59.9
DK 120H350M		U-700			1,176	120,000	350	82.5	75	38.5	88	95.5	16	100	41.8	670	280	56.0	55.5
DK 140H350M		U-700			1,372	140,000	350	85	82	41.75	90.2	99.3	16	115	50.5	670	280	64.5	64.0
DK 160H350M		U-700			1,569	160,000	350	92.5	86	44.5	101.2	110.3	19	120	62.8	670	280	74.0	78.1

Note: 1. Chains marked with ※ should not be used for the conveyance of materials causing wear and the conveyance of loads with frequently fluctuating volume.
2. Ask us for the delivery time.

Shapes and Indications of Attachments

L

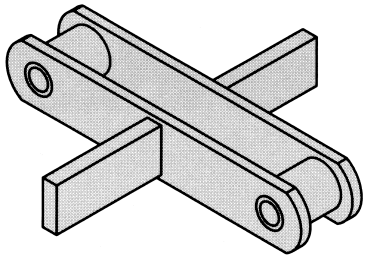

For conveying highly adhesive powder.

B

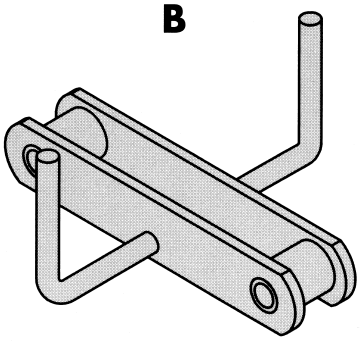

For conveying moderately adhesive powder.

B1

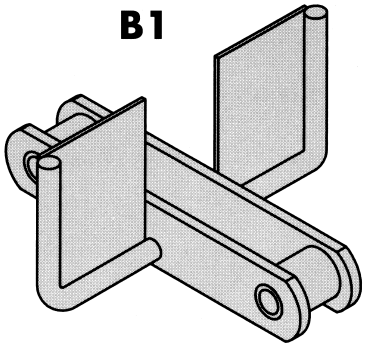

For conveying slightly adhesive powder on an ascending slope, or for conveying articles likely to float.

KL

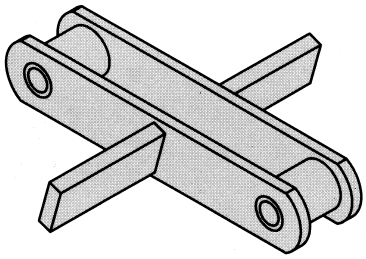

For conveying highly adhesive powder containing granular material.

KB1

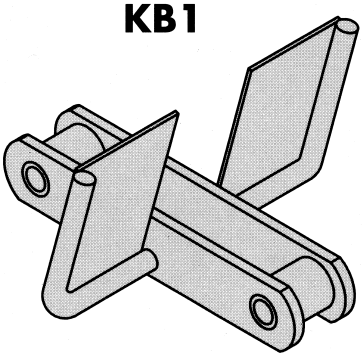

For conveying moderately adhesive powder containing some granular material.

UB1

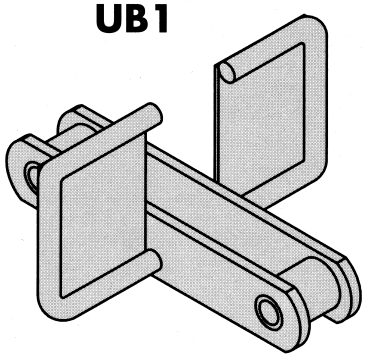

For conveying slightly adhesive powder in a large conveyor.

KUL

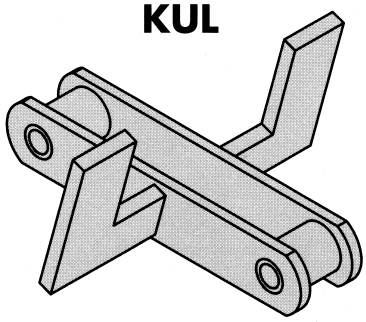

For conveying slightly adhesive powder containing a large amount of granular material.

OB

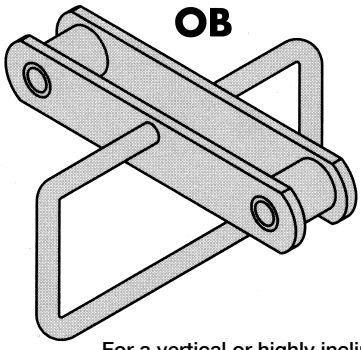

For a vertical or highly inclined conveyor such as Conveyor L or S.

Indication

1. An attachment is indicated by a hyphen added after the symbol of tensile strength grade. However, in the case of a strong type conveyor chain, an attachment is indicated by adding a hyphen after the roller type.

Example) **DK19152S-K-L**

- L — Shape of attachment
- K — Tensile strength grade
- S — Roller type
- DK19152 — Chain number

DK75H200M-L

- L — Shape of attachment
- M — Roller type
- DK75H200 — Chain number

2. In the case of an inclined attachment, "K" is added before the attachment symbol.

Example) **DK19152S-A-KL**
DK75H200M-KUL

3. When an attachment has a steel sheet or rib, etc. as an accessory, "1" is added at the end.

Example) **DK19152S-E-B1**
DK75H200M-KB1

(b) Chains for Dust Conveyor

This chain is used for conveyors exclusively for carrying dust. Depending on the application, the following three types are available:

1) Roller S Conveyor Chain for low density powder with Attachment B or B1 for U and LU Type Dust Conveyors
2) Roller M Conveyor Chain for medium density powder with Attachment KL or KUL for DU, DU S, LDU and LDU S Type Dust Conveyors
3) Block Chain for highly abrasive powder with KL or KUL attachments for DUB, DUB S LDUB and LDUB S Type Dust Conveyors

Select optimal chains depending on the specifications of the dust conveyors.

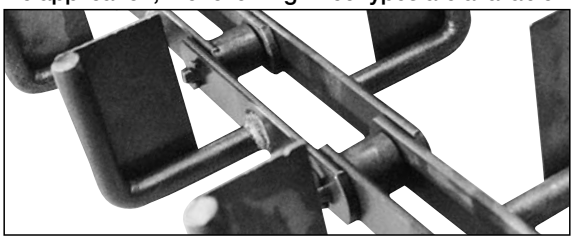

Conveyor chains for U, LU type dust conveyor

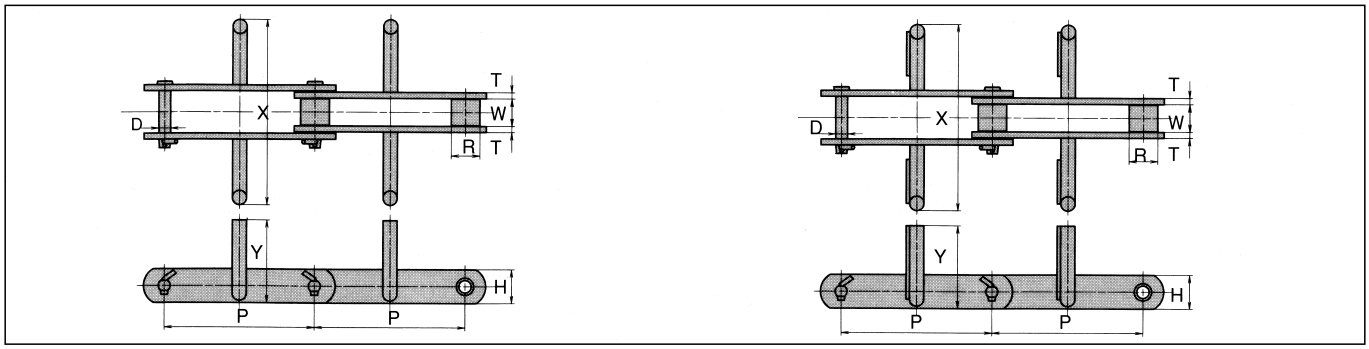

Unit (mm)

Chain No.	Type of DK dust conveyor	Avg. tensile strength kN (kgf)	Pitch P	Roller link width W	Roller outside dia. R	Pin D	Plate T	Plate H	Blade width X	Blade height Y	Approx. weight (kg/m) With Attachment B	Approx. weight (kg/m) With Attachment B1
DK 19152S	U-200 LU-200	186 (19,000)	152.4	36.5	34.9	15.9	8	45	175	80	11.5 11.5	— —
DK 19200S	U-270 LU-270	186 (19,000)	200	36.5	34.9	15.9	8	45	245	110	12.2 —	— 13.3
DK 25200S	U-270 LU-270	245 (25,000)	200	51.8	40.1	19.1	9	50	245	110	15.7 —	— 16.8
	U-350 LU-350								325	140	19.0 —	— 21.5
DK 32200S	U-350 LU-350	313 (32,000)	200	57.6	44.5	22.2	9	65	325	140	23.3 —	— 25.8

Conveyor chain for DU, DU-S, LDU-S type dust conveyors

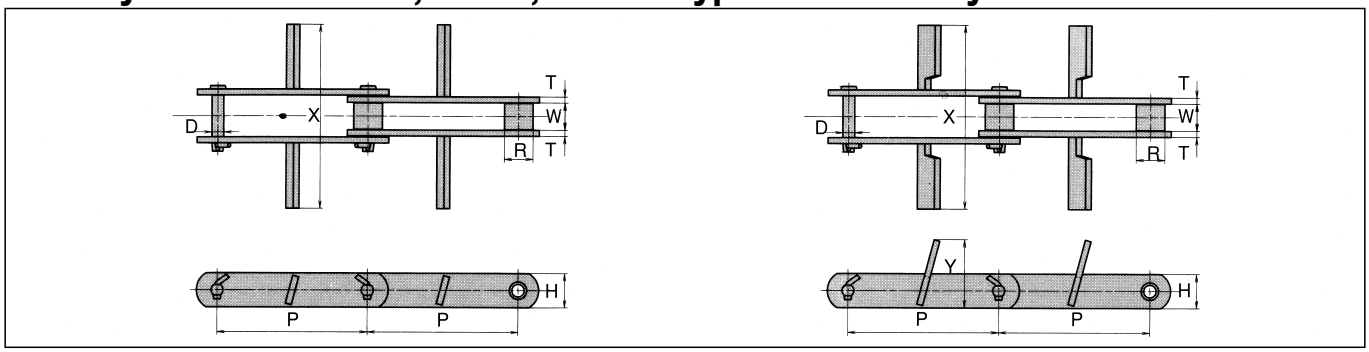

Unit (mm)

Chain No.	Type of DK dust conveyor	Avg. tensile strength kN (kgf)	Pitch P	Roller link width W	Roller outside dia. R	Pin D	Plate T	Plate H	Blade width X	Approx. weight (kg/m) With Attachment KL	Approx. weight (kg/m) With Attachment KUL
DK 19152M	DU-200 DU-200S LDU-200 LDU-200S	279 (28,500)	152.4	36.5	38.1	15.9	8	45	185	11.2 11.2 — —	— — 12.6(Y=65)13.8(Y=90) 12.6(Y=65)13.8(Y=90)
	DU-250 DU-250S LDU-250 LDU-250S								230	12.2 12.2 — —	— — 13.9(Y=65)17.0(Y=110) 13.9(Y=65)17.0(Y=110)
DK 25200M	DU-310 DU-310S LDU-310 LDU-310S	392 (40,000)	200	51.8	44.5	19.1	9	50	290	15.0 15.0 — —	— — 20.0(Y=110)22.2(Y=140) 20.0(Y=110)22.2(Y=140)

Note: 1. The blade dimensions (X, Y) can be changed upon request. 2. Ask us for delivery time.

Block Chains for DUB, DUB S, LDUB, LDUB S type dust conveyor

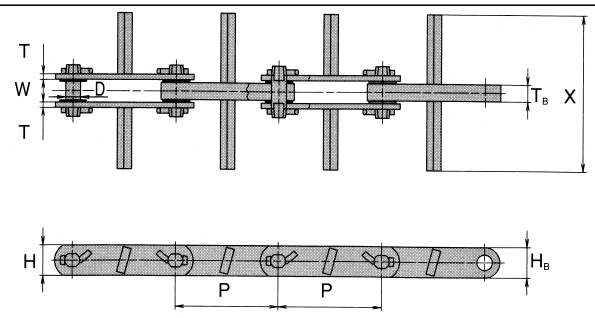

KL Attachment

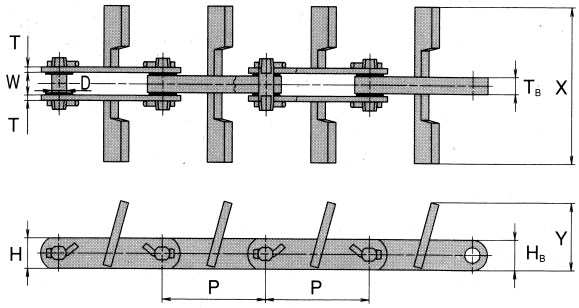

KUL Attachment

Unit (mm)

Chain No.	Type of DK dust conveyor	Avg. tensile strength kN	Avg. tensile strength kgf	Pitch **P**	Roller link width **W**	Pin **D**	Outer plate **T**	Outer plate **H**	Block T_B	Block H_B	Wing width **X**	Approx. weight (kg/m) With Attachment **KL**	Approx. weight (kg/m) With Attachment **KUL**
DK 30B150	DUB-200	294	30,000	152.4	33.3	22	8	45	25	45	180	13.5	—
	DUB-200S											13.5	—
	LDUB-200											—	14.5 (Y=65) 16.0 (Y=90)
	LDUB-200S											—	14.5 (Y=65) 16.0 (Y=90)
	DUB-250										230	14.5	—
	DUB-250S											14.5	—
	LDUB-250											—	16.5 (Y=65) 19.5 (Y=100)
	LDUB-250S											—	16.5 (Y=65) 19.5 (Y=100)
DK 40B150	DUB-310	392	40,000	152.4	40.8	25.2	9	50	32	50	290	20.0	—
	DUB-310S											20.0	—
	LDUB-310											—	22.3 (Y=65) 27.8 (Y=110)
	LDUB-310S											—	22.3 (Y=65) 27.8 (Y=110)
DK 40B200	DUB-400	392	40,000	200	40.8	25.2	9	50	32	50	380	19.6	22.0 (Y=65) 27.9 (Y=110)

Drive Sprocket

(Block Chains for dust conveyors)

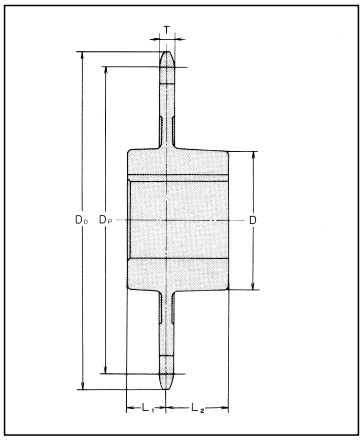

Dimensions

Unit (mm)

Sprocket size	No. of teeth (for single pitch)	Chain pitch	Pitch dia. **Dp**	Outer dia. **Do**	Tooth width **T**	Range of axle dia. Over	Range of axle dia. ≤
DK 30B150	4 (8)	152.4	398.2	430	22	50	145
	5 (10)		493.2	525			
DK 40B150	4 (8)	152.4	398.2	435	28	50	145
	5 (10)		493.2	530			
DK 40B200	4 (8)	200	522.4	560	28	50	145
	5 (10)		647.2	684			

Hub dimensions

Sprocket size	Range of axle dia. Over	Range of axle dia. ≤	Hub dimensions **D**	**L_1**	**L_2**
DK 30B150	50	65	110	30	45
	65	85	140	40	60
DK 40B150	85	110	180	50	80
DK 40B200	110	130	205	70	100
	130	145	225	70	100

[Type indication] DK 30B150- 4 No.d — For drive sprocket
(Sprocket size / No. of teeth / Axle hole dimension)

Note: 1. For the axle hole dimension, please refer to pages describing axle diameters and hub dimensions.
2. Ask us for the delivery time.

Driven Sprocket

(Block Chains for dust conveyors)

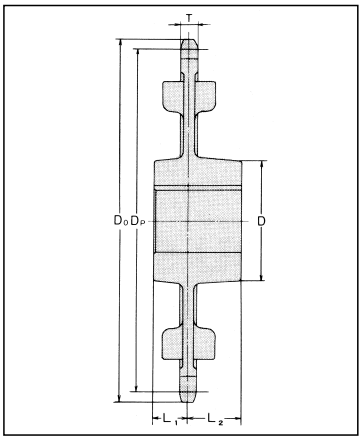

Dimensions

Unit (mm)

Sprocket size	No. of teeth (for single pitch)	Chain pitch	Pitch dia. **Dp**	Outer dia. **Do**	Tooth width **T**	Range of axle dia. Over	Range of axle dia. ≤
DK 30B150	4 (8)	152.4	398.2	420	22	50	110
	5 (10)		493.2	515			
DK 40B150	4 (8)	152.4	398.2	422	28	50	110
	5 (10)		493.2	517			
DK 40B200	4 (8)	200	522.4	547	28	50	110
	5 (10)		647.2	671			

Hub dimensions

Sprocket size	Range of axle dia. Over	Range of axle dia. ≤	Hub dimensions **D**	**L_1**	**L_2**
DK 30B150	50	65	110	30	45
DK 40B150	65	85	140	40	60
	85	110	180	50	80

[Type indication] DK 30B150- 4 No.d — For driven sprocket
(Sprocket size / No. of teeth / Axle hole dimension)

Note: 1. For the axle hole dimension, please refer to pages describing axle diameters and hub dimensions.
2. Ask us for the delivery time.

Eco Slight (small sized apron conveyor chain) Hinge Type

Compared to Flat Pan Type Conveyor Chain, Eco Slight has the following features.

- **Flexibility in application to equipment and work space**
  Various patterns of attachment to equipment and lay out in work space are possible.
- **Less trouble with conveyance**
  Seizing of loads hardly occurs during conveyance.
- **Easy maintenance**
  The apron can be replaced just by detaching the pins of the side chain.

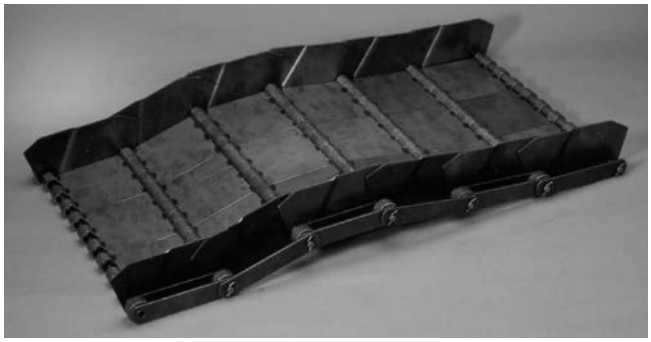

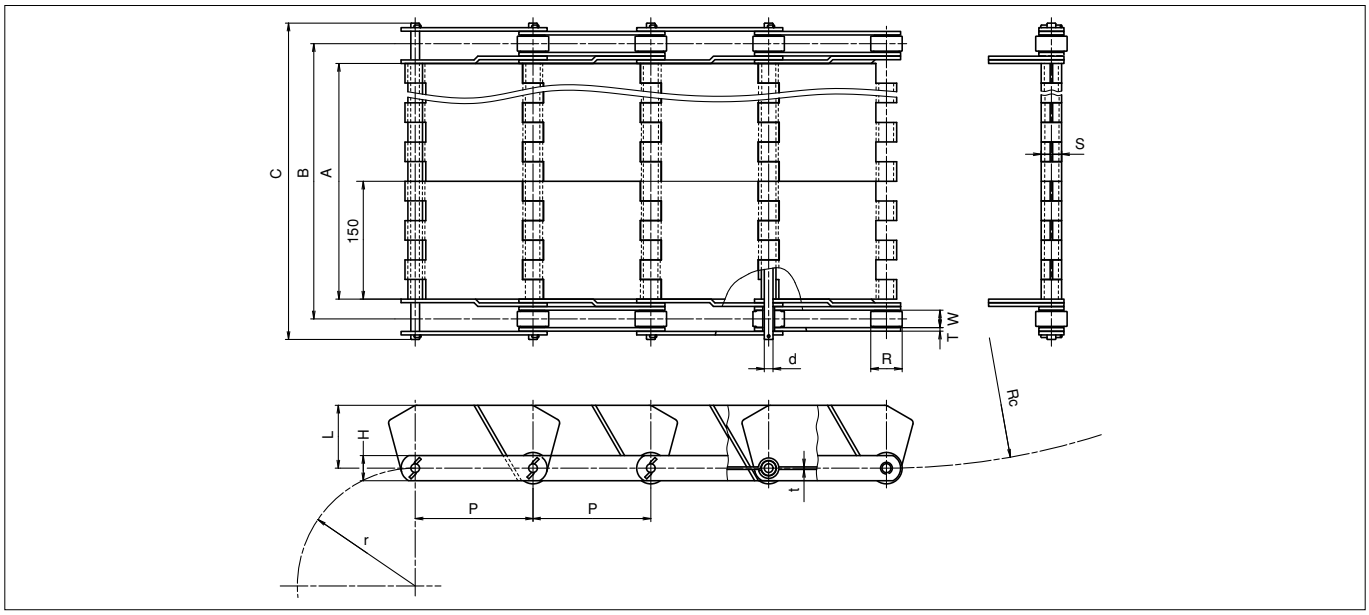

Dimensions

Unit (mm)

Conveyor No.	Conveyor											Side chain						
	Apron width A	Center distance B	Outer width C	Wing height L	Hinge plate thickness t	Hinge S	Min. flexibility Upper radius Rc	Min. flexibility Lower radius r	Avg. tensile strength kN	Avg. tensile strength kgf	Approx. weight (kg/m)	Side chain No.	Pitch P	Roller outer dia. R	Roller link width W	Plate Height H	Plate Thickness T	Pin dia. d
DEC 3075-150	150	188.4	227.3								13.0							
DEC 3075-300	300	338.4	377.3	40	2.0	16.4	300	75	58.8	6,000	17.5	DK03075R	75	30	18	22	3.2	7.94
DEC 3075-450	450	488.4	527.3								22.4							
DEC 3100-150	150	188.4	227.3								12.7							
DEC 3100-300	300	338.4	377.3	60	2.0	16.4	450	100	58.8	6,000	16.9	DK03100R	100	30	18	22	3.2	7.94
DEC 3100-450	450	488.4	527.3								21.1							
DEC 7150-150	150	200.4	252.7								18.8							
DEC 7150-300	300	350.4	402.7								25.7							
DEC 7150-450	450	500.4	552.7	80	3.2	26.0	900	150	137.3	14,000	32.2	DK07150R	150	40	22.2	32	4.5	11.11
DEC 7150-600	600	650.4	702.7								39.9							
DEC 7150-750	750	800.4	852.7								46.3							

Note: 1. Consult us if Apron width A is wider than above values.
2. F Roller (flange type) is available.
3. Hinge plate thickness with thicker dimensions than above values can be manufactured.
4. Tensile strength higher than DEC7000 and specified pitch numbers other than the above can be manufactured.
5. Cleat (catcher rail for dropped load) can be attached.

[Type indication]

DEC 3075-150 ; 100 WL

- DEC: Eco Slight / Conveyor chain
- 3075: Side Chain No. DK03075R
- 150: Apron width
- Conveyor No.
- 100: Quantity of components (※)
- WL: Unit
- Pitch number

(※) 100WL indicates a composition of 100 links each for both sides of the side chain, 100 pins and 100 aprons.

Chain for Garbage Conveyor

This conveyor chain is recommended for apron conveyors, scraper conveyors, and other systems conveying industrial waste in a recycle center, household refuse or ash in an incineration plant. It is designed to prevent interference with chain rotation even when various loads enter into the roller bearing.
In addition to standard chains, custom-made chains with enhanced wear resistance and corrosion resistance to meet the requirements of specific uses can be manufactured upon request.

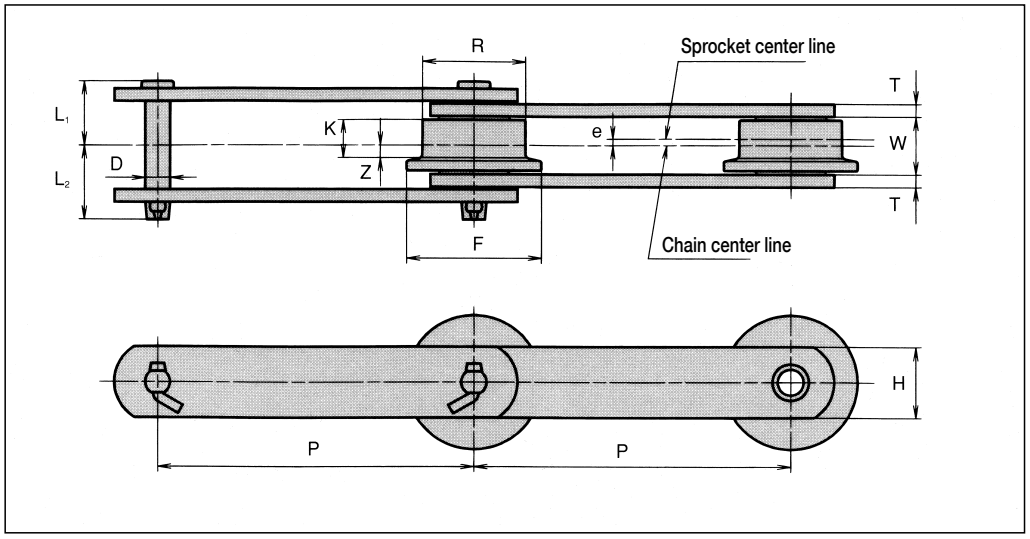

Dimensions

Unit (mm)

Chain No.	Avg. tensile strength		Pitch	Roller link width	Roller					Pin			Plate		Approx. weight
	kN	kgf	P	W	R	F	K	e	Z	D	L_1	L_2	T	H	(kg/m)
DK 11125UF	112	11,500	125	30.6	50	65	20	3.5	6.5	14	32.6	38.0	6	38	8.9
DK 11150UF			150												7.9
DK 19200UF	186	19,000	200	36.5	65	85	24	4	8	15.9	40.4	47.1	8	45	12.1
DK 19250UF			250												10.8
DK 25200UF	245	25,000	200	51.8	80	105	35.5	5	12.5	19.1	51.7	59.8	9	50	19.5
DK 25250UF			250												17.0
DK 25300UF			300												15.3
DK 32250UF	313	32,000	250	57.6	100	130	39	6	13.5	22.2	55.7	62.8	9	65	26.2
DK 32300UF			300												23.4
DK 50300UF	490	50,000	300	67.4	125	160	44	7	15	25.4	68.1	74.9	12	80	40.4
DK 50450UF			450												31.9

Note: 1. It is possible to manufacture chains with roller types other than UF and with specific attachments.
2. The dimensions for the sprocket used for this chain is identical to that of the F type Roller. (Please see P.315)
3. Ask us for the delivery time.

Bucket Elevator Chains

A bucket elevator is a conveyor in which buckets are installed on a vertically circulating chain, to vertically convey loads of granular powder. There are two series of bucket elevators: NE Type (standard speed) and NSE Type (high speed). Both types have wide-ranging applications.

(a) NE Bucket Elevator Chains

An NE type bucket elevator is a general-use bucket elevator that operates at a normal conveyance speed. The elevator is manufactured with two types of chains: Standard Conveyor Chain with Attachment G4 (standard or heavy-duty) and DK Strong Z Conveyor Chain.

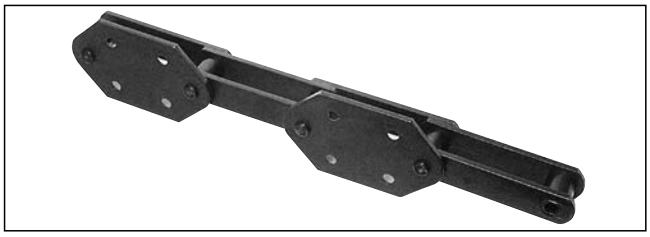

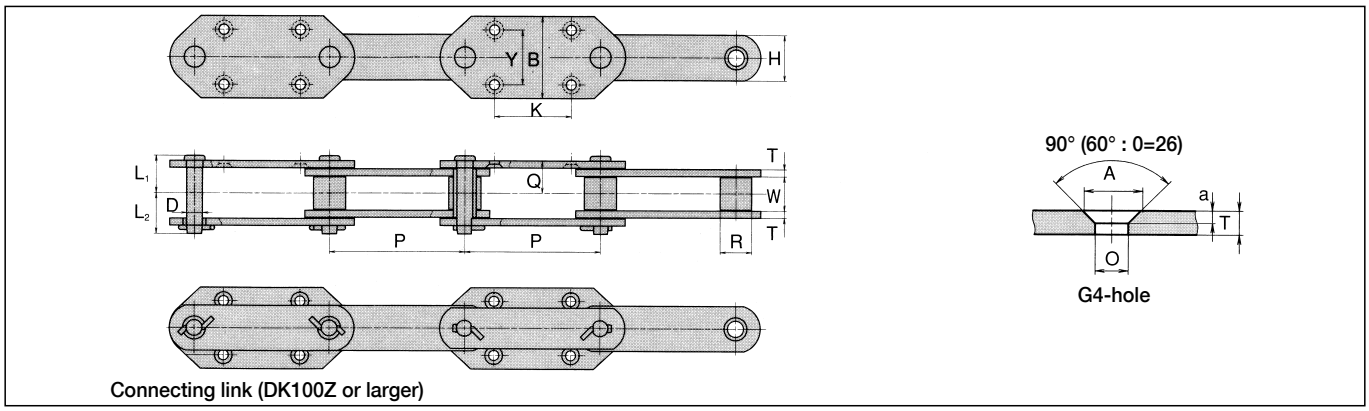

Connecting link (DK100Z or larger)

Unit (mm)

Chain No.	Type	Avg. tensile strength kN (kgf)		Pitch	Roller link width	Roller dia.	Pin			Plate		Attachment						Flush bolt	Approx. weight (kg/m)	
		Standard	Heavy-duty	P	W	R	D	L_1	L_2	T	H	K	Y	B	O	A	Q		Without attachment	With Attachment G4
DK 19200M DK 19250M	Standard	186 (19,000)	279 (28,500)	200 250	36.5	38.1	15.90	40.4	47.1	8	45	100	80	125	14	27	35.5	M12	8.6 8.1	11.0 10.5
DK 25200M DK 25250M		245 (25,000)	392 (40,000)	200 250	51.8	44.5	19.10	51.7	59.8	9	50	100 140	80	125	14	27	45.5	M12	11.9 11.0	14.6 13.7
DK 32200M DK 32250M DK 32300M		313 (32,000)	500 (51,000)	200 250 300	57.6	50.8	22.20	55.7	62.8	9	65	100 140 170	80 100	125 150	18	33	48.5	M16	16.4 15.2 14.2	18.7 18.2 17.2
DK 50250M DK 50300M		490 (50,000)	686 (70,000)	250 300	67.4	57.1	25.40	68.1	74.9	12	80	140 170	100	150	18	33	60	M16	25.2 23.3	28.7 26.8
DK 65300M		588 (60,000)	882 (90,000)	300	75	63.5	28.00	81.2	88.8	16	75	170	100	160	22	39	72	M20	30.1	34.8
DK 11152M		112 (11,500)	171 (17,500)	152.4	30.8	28.6	12.70	31.7	36.6	6	38	75	70	110	12	22	28.5	M10	5.8	7.4
DK 19152M		186 (19,000)	279 (28,500)	152.4	36.5	38.1	15.90	40.4	47.1	8	45	75	70	110	14	27	35.5	M12	9.4	11.4
DK 25152M		245 (25,000)	392 (40,000)	152.4	37.5	44.5	19.10	44.6	52.9	9	50	75	70	125	14	27	38.5	M12	12.6	15.2
DK 35Z200M DK 35Z250M	Strong Z-type	—	392 (40,000)	200 250	51.8	44.5	22.20	53.8	60.2	9	57	100 140	80 100	125 150	14	27	45.5	M12	12.7 11.7	15.3 15.0
DK 50Z200M DK 50Z225M DK 50Z250M DK 50Z300M		—	588 (60,000)	200 225 250 300	57.6	50.8	25.40	57.3	64.2	9	75	100 120 140 170	80 100	125 150	18	33	48.5	M16	17.7 16.9 16.2 15.2	20.0 19.2 19.2 18.2
DK 75Z200M DK 75Z250M DK 75Z300M DK 75Z350M		—	931 (95,000)	200 250 300 350	67.4	63.5	31.75	70.0	78.0	12	90	100 140 170 225	80 100	125 150	18	33	60	M16	31.0 28.0 26.0 24.6	33.3 31.5 29.5 28.1
DK 100Z250M DK 100Z300M DK 100Z350M		—	1,225 (125,000)	250 300 350	75.0	70.0	35.00	83.2	90.8	16	100	140 170 225	100 120	150 180	18 22	33 39	72	M16 M20	42.5 39.5 37.2	47.3 45.6 43.2
DK 120Z250M DK 120Z300M DK 120Z350M DK 120Z400M		—	1,470 (150,000)	250 300 350 400	82.5	75.0	38.50	88.0	95.5	16	115	140 170 225 260	120 140	180 210	18 22	33 39	76	M16 M20	50.6 46.8 43.7 41.6	56.2 52.3 49.2 48.7
DK 140Z300M DK 140Z350M DK 140Z400M		—	1,667 (170,000)	300 350 400	85.0	82.0	41.75	90.2	99.3	16	125	170 225 260	140	210	26	42.2	77	M24	55.5 51.8 49.1	62.0 58.2 55.4
DK 160Z300M DK 160Z350M DK 160Z400M		—	1,863 (190,000)	300 350 400	92.5	86.0	44.50	101.2	110.3	19	130	170 225 260	140	210	26	42.2	87	M24	68.4 63.8 60.3	75.7 71.0 67.4
DK 200Z350M DK 200Z400M DK 200Z450M		—	2,255 (230,000)	350 400 450	95.0	97.0	50.80	103.3	114.0	19	150	200 260 290	180	250	26	42.2	88.5	M24	77.5 73.3 70.0	86.8 82.6 79.3
DK 250Z350M DK 250Z400M		—	2,843 (290,000)	350 400	100.0	107.0	56.00	113.0	123.0	22	165	200 260	180	250	26	42.2	97	M24	101.6 92.5	110.7 101.7

Note: Ask us for the delivery time.

(b) NSE Bucket Elevator Chains

An NSE type bucket elevator is designed for high speed conveyance and the speed is about double that of NE type. To withstand high speed operation and to reduce noise and shock, the chain pitch is one-half or less of that of the chains for NE type. To ensure high durability, pins, bushings and rollers are the same as those for strong Z type.

Use the specialty sprockets for NSE Bucket Elevator Chains.

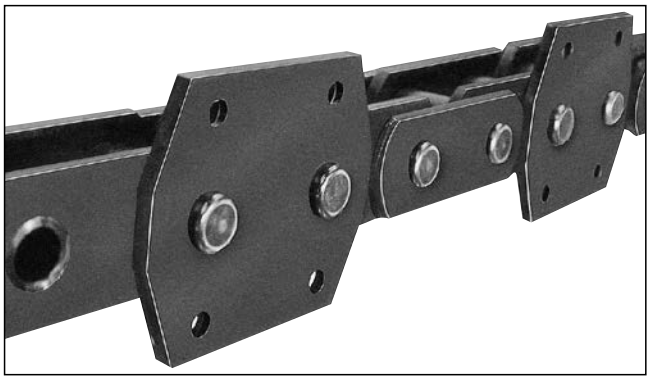

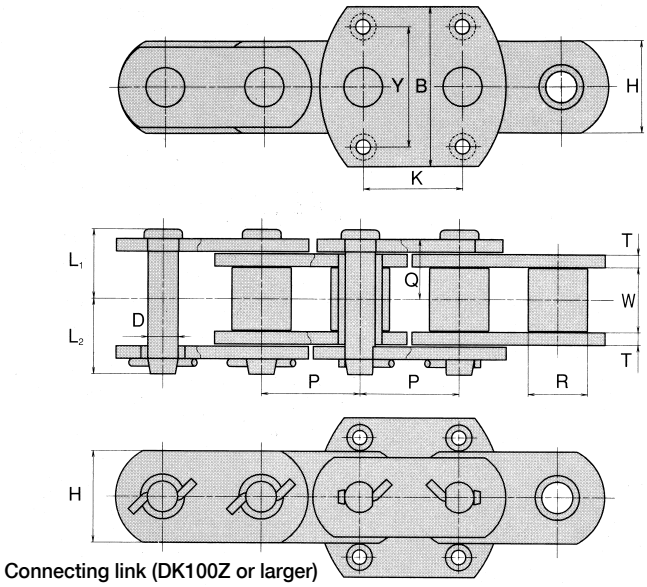

Connecting link (DK100Z or larger)

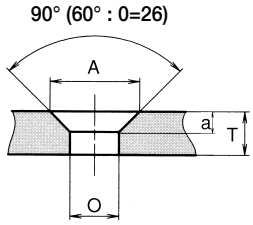

G4-hole

Unit (mm)

Chain No.	Type	Avg. tensile strength kN (kgf)		Pitch	Roller link width	Roller dia.	Pin			Plate		Attachment							Flush bolt	Approx. weight (kg/m)	
		Standard	Heavy-duty	P	W	R	D	L_1	L_2	T	H	K	Y	B	O	A	a	Q		Without attachment	With Attachment G4
DK 19076M	Standard	186 (19,000)	—	76.2	36.5	38.1	15.9	40.4	47.1	8	45	75	80	125	14	27	6.5	35	M12	13.1	17.0
DK 28076M		274 (28,000)	—																		
DK 23100M		225 (23,000)	—	100	51.8	44.5	19.1	51.7	59.8	9	50	100	105	150	18	33	7.5	45.5	M16	17.5	20.4
DK 32100M		313 (32,000)	—		57.6	50.8	22.2	55.7	62.8		65							48.5		24.7	27.3
DK 35Z100M	Strong Z-type	—	392 (40,000)	100	51.8	44.5	22.2	53.8	60.2	9	57	100	105	150	18	33	7.5	45.5	M16	19.0	21.7
DK 50Z100M		—	588 (60,000)		57.6	50.8	25.4	57.3	64.2		75							48.5		26.2	28.6
DK 50Z125M				125								125	130	180						23.0	26.1
DK 75Z125M		—	931 (95,000)		67.4	63.5	31.75	70	78	12	90							60		41.9	46.1
DK 75Z150M				150								150	170	220						37.6	42.7
DK 75Z175M				175								175	180	230						34.5	39.7
DK 100Z125M		—	1,225 (125,000)	125	75	70	35	83.2	90.8	16	100	125	130	180	18	33	7.5	72	M16	63.3	68.1
DK 100Z150M				150								150	170	230	22	39	8.5		M20	56.7	63.9
DK 100Z175M				175								175	180	240						52.0	59.3
DK 120Z125M		—	1,470 (150,000)	125	82.5	75	38.5	88	95.5		115	125	150	200	18	33	7.5	76	M16	74.6	79.8
DK 120Z150M				150								150	170	230	22	39	8.5		M20	68.3	75.1
DK 120Z175M				175								175	180	240						62.5	69.4
DK 140Z150M		—	1,667 (170,000)	150	85	82	41.75	90.2	99.3		125	150	170	230	26	42.2	14	77		81.3	87.8
DK 140Z175M				175								175	180	250						74.0	81.1
DK 160Z175M		—	1,863 (190,000)		92.5	86	44.5	101.2	110.3	19	130							87	M24	91.6	99.9
DK 200Z175M		—	2,225 (230,000)		95	97	50.8	103.5	114		150		195					88.5		119.3	134.2

Note: 1. Pins for DK 23100M and DK 32100M are both-side notched pins. 2. Ask us for the delivery time.

Flat Top Type Chain for Coil Conveyor

Flat Top Type Chain is designed to carry very heavy loads such as steel coils produced by hot rolling or cold rolling in ironworks or steel mills. Based on a standard conveyor chain, the top face of the chain allows stable conveyance of heavy coils.
Since a large load acts on the chain, a heavy-duty construction is adopted. We manufacture 16 kinds of standard Flat Top Type Chains.



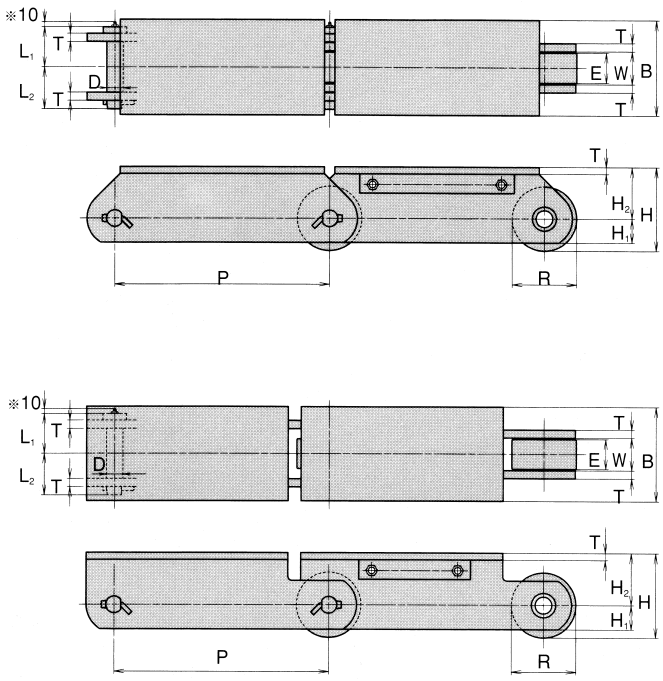

The dimension marked ※ of non-lubrication type is zero.

The chain features bearings built into the rollers to minimize running resistance, and grease type and maintenance-free non-lubrication type are available.

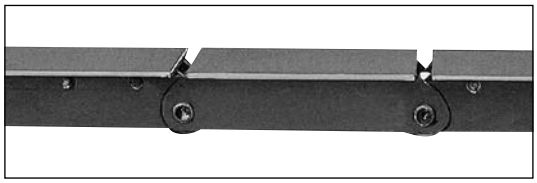

Unit (mm)

Chain No.	Avg. tensile strength		Pitch	Roller link width	Roller		Pin			Plate				Top plate		Approx. weight	Bearing rated load Dynamic C / Static C kN (kgf)
	kN	kgf	P	W	R	E	D	L_1	L_2	T	H	H_1	H_2	T_1	B	(kg/m)	
DK 60300	588	60,000	300	60	125	55	28	64.5	72.5	12	154.5	45	92	12	180	63	158(16,200)
DK 60400			400													58	／
DK 60500			500													55	133(13,600)
DK 90300	882	90,000	300	62	135	55	30	74.5	81.5	16	177.5	56	110	16	190	90	204(20,900)
DK 90400			400													83	／
DK 90500			500													79	164(16,800)
DK 90300W	882	90,000	300	78	135	71	30	82.5	89.5	16	177.5	56	110	16	210	98	243(24,800)
DK 90400W			400													89	／
DK 90500W			500													84	233(23,800)
DK 130300	1,274	130,000	300	76	150	70	38.5	89.5	97.5	19	188	63	113	16	210	119	278(28,400)
DK 130400			400													109	／
DK 130500			500													102	246(25,100)
DK 130600			600													97	
DK 160400	1,569	160,000	400	85	175	80	41.5	95.5	102.5	19	221.5	75	134	19	220	139	304(31,000)
DK 160500			500													130	／
DK 160600			600													122	343(35,000)

Note: Ask us for the delivery time.

Long Pan Conveyor Chain

As shown in the photo, this chain is used on a conveyor for carrying bulk, using pans longer than the chain pitch (long pan conveyor). Special attachments are installed to prevent long pans from interfering with the motion of the chain at the points of engagement with the sprockets. Furthermore, to make the entire width of the conveyor smaller, the width of the chain is smaller than a general use chain of the same size, and a smaller pitch is adopted to ensure smooth movement of the conveyor. We manufacture nine kinds of standard Long Pan Conveyor Chains.

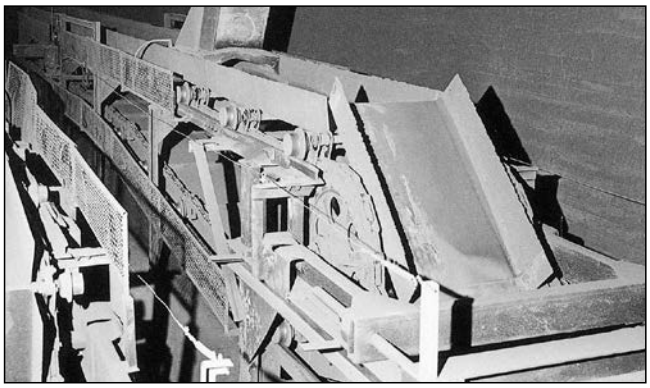

Long Pan Conveyor Chain is suitable for carrying a hard abrasive powder of high temperature, and has attachments for installing pans every four or eight links. Pans are pulled by the roller shafts mounted on the attachments to receive pans. Depending on the installation intervals of attachments, L type (every eight links) and S type (every four links) are available.

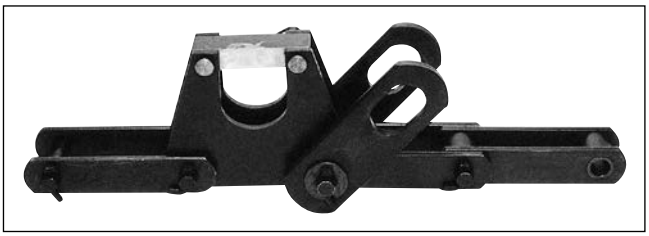

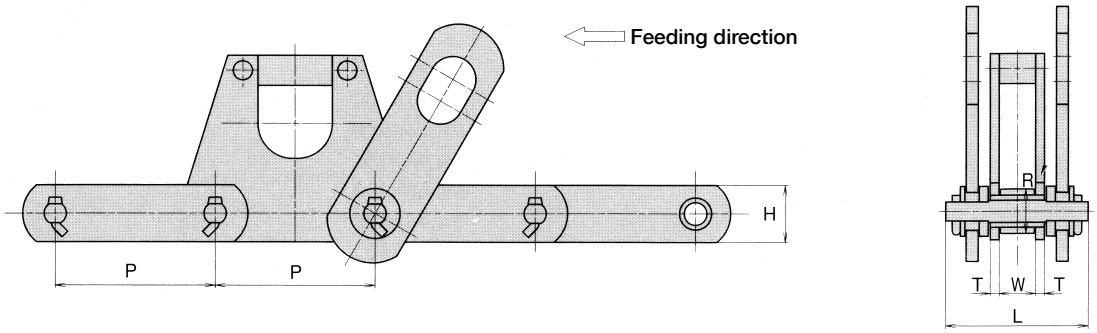

L Type Long Pan Conveyor Chain

Unit (mm)

Chain No.	Avg. tensile strength		Pitch	Roller link width	Roller dia.	Pin length	Plate		Approx. weight (kg／8L×2)
	kN	kgf/strand	P	W	R	L	T	H	
DK 35-160L	323	33,000	160	36.0	44.5	141.7	9	50	47
DK 50-160L	490	50,000	160	46.0	50.8	154.1	9	65	63
DK 75-160L	735	75,000	160	51.4	63.5	187.8	12	80	106
DK 100-160L	980	100,000	160	55.0	70.0	209.5	16	90	155
DK 120-160L	1,176	120,000	160	65.0	75.0	221.5	16	100	185

Note: Ask us for the delivery time.

S Type Long Pan Conveyor Chain

Unit (mm)

Chain No.	Avg. tensile strength		Pitch	Roller link width	Roller dia.	Pin length	Plate		Approx. weight (kg／4L×2)
	kN	kgf/strand	P	W	R	L	T	H	
DK 20-160S	205	21,000	160	30.6	28.58	102.5	6	38	17
DK 35-160S	323	33,000	160	36.0	44.5	141.7	9	50	30
DK 50-160S	490	50,000	160	46.0	50.8	154.1	9	65	38
DK 75-160S	735	75,000	160	51.4	63.5	187.8	12	80	62

Note: Ask us for the delivery time.

Block Chain

When a chain having a high tensile strength for the chain width (corresponding to the pin length) is required, a block chain is an excellent choice. A Block Chain is simple and highly rigid since it does not have bushings or rollers. Although the frictional force is large when the chain runs on the floor, the chain has an extended service life because it has no rotating parts. Thus, large loads can be conveyed. Block Chains are suitable for conveyors loading heavy articles with strong impact and conveyors used in severe environments to convey high temperature or abrasion-sensitive and corrosion-sensitive objects.
We manufacture 26 kinds of standard Block Chains in tensile strength ranging from 308kN (=31.5 tons) to 2,721 kN (=277.5 tons). For enhancing reliability of conveyance, block chains with various dogs are designed and manufactured upon request.

(a) Block Chain

DK Block Chain consists of two outer link plates and one block connected by pins. This unique construction is extremely high in both rigidity and mechanical strength. Also excellent in wear resistance and heat resistance, it is suited for pulling articles as well as for high speed conveyance and conveyance of high temperature materials. Usually it is combined with various dogs according to the kinds of materials to be conveyed, while it is also possible to load materials directly on the chain or fit the chain with other types of attachments.

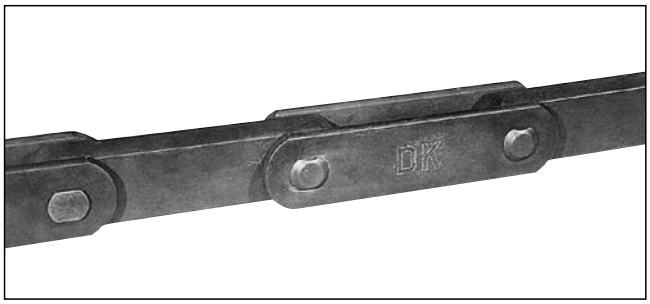

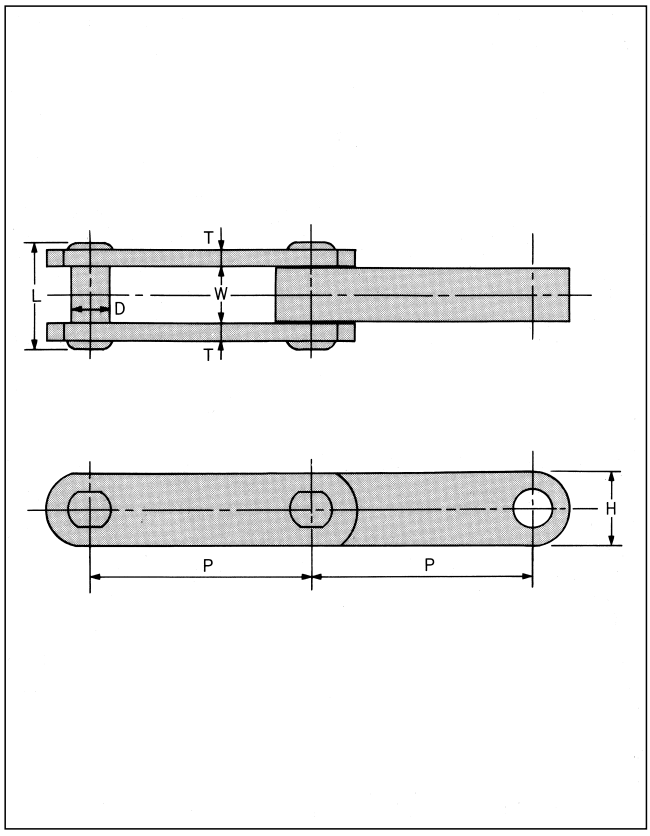

Unit (mm)

Chain No.	Avg. tensile strength		Pitch	Pin link width	Pin dia.	Pin length	Outer plate		Approx. weight (kg/m)
							Thickness	Width	
	kN	kgf	P	W	D	L	T	H	
DK 32B150	308	31,500	150	24	19.1	48	8	38	7.0
DK 32B200			200						6.6
DK 41B150	397	40,500	150	27	22.0	52	8	45	9.0
DK 41B200			200						8.5
DK 56B200	554	56,500	200	30	25.2	58	9	55	12.3
DK 56B250			250						12.0
DK 63B200	617	63,000	200	34	28.0	62	9	60	13.7
DK 63B250			250						13.0
DK 70B200	720	73,500	200	34	28.0	62	9	65	16.2
DK 70B250			250						16.5
DK 90B200	907	92,500	200	40	31.7	75	12	70	21.0
DK 90B250			250						20.0
DK 115B250	1,117	114,000	250	43	35.0	78	12	75	25.0
DK 115B300			300						24.0
DK 140B250	1,402	143,000	250	48	38.5	84	12	85	32.0
DK 140B300			300						31.0
DK 180B300	1,740	177,500	300	53	41.7	96	16	95	39.0
DK 180B350			350						37.8
DK 210B300	2,152	219,500	300	59	44.5	102	16	110	50.0
DK 210B350			350						48.3
DK 250B300	2,432	248,000	300	69	50.8	120	19	115	58.8
DK 250B350			350						56.7
DK 280B300	2,721	277,500	300	74	56.0	125	19	125	66.0
DK 280B350			350						62.3

Note: Ask us for the delivery time.

Type of dogs

1. Fixed dog
A protrusion is provided on a block or outer plate for conveyance.

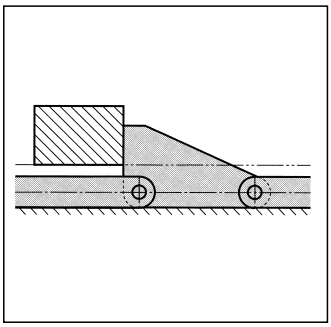

2. Tilt dog
A conveyed article in front of the dog is pushed by a dog, such as a fixed dog. When a conveyed article comes from the rear or when the chain travels reversely, the dog is tilted forward, allowing the article to pass. After the article has passed, the dog automatically returns to its original position.

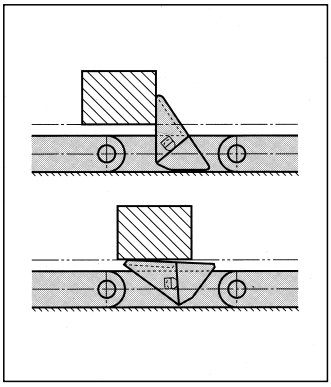

3. Duck dog
A duck dog applies pressure on a conveyed article on a guide rail. At the position where the guide rail ends, the dog ducks (drops), leaving the article at that position while passing under it.

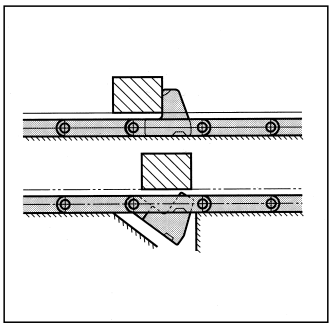

4. Tilt duck dog
A tilt duck dog has both the functions of a tilt dog and a duck dog. As it travels on a guide rail, it maintains pressure on a conveyed article. When a conveyed article comes from the rear, the dog tilts to allow it to pass. At the position where the guide rail ends, it ducks to leave the article at that position, while passing under it.

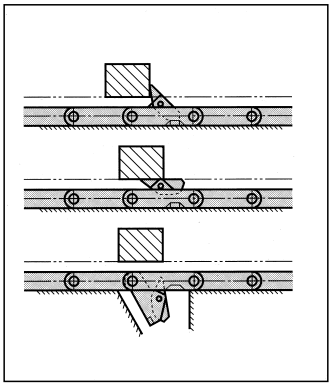

(b) Special Rivetless Chain

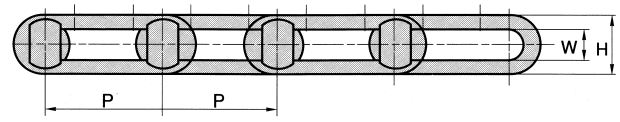

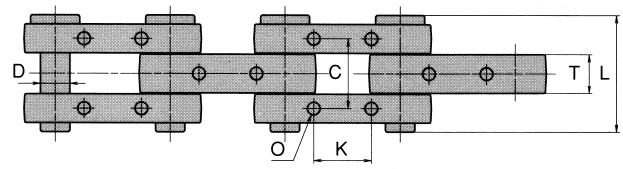

Strengthened type rivetless chain is also available with the dimensions in the following table.

Unit (mm)

Chain No.	Pitch P	L	D	T	H	W	K	C	O	Avg. tensile strength		Approx. weight
										kN	kgf	(kg/m)
DK 100-152	152.4	158	30	45	60	32	64	92	13	980	100,000	28.7

Note: Ask us for the delivery time.

Water Treatment Conveyer Chain

Water Treatment Conveyer Chains are available for the following four applications as standard.

Chains for Traveling Water Screen

A thermal power plant or nuclear power plant takes in a large quantity of sea water as cooling water. Sea water contains a variety of living organisms, such as jelly fish and algae. A traveling water screen which frame is rotated by a chain removes impurities at the intake port of sea water. Because the chain is used in sea water, resistance to corrosion and brittle fracture are special design considerations. We have been active in the research, development and manufacture of submersible conveyor chains from the early days of their use.

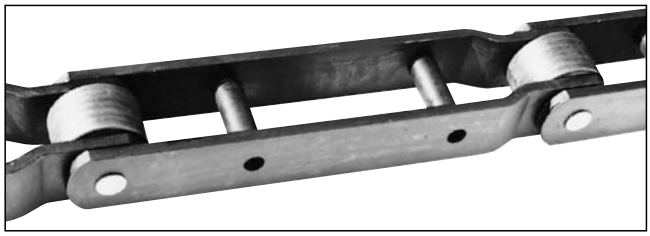

This is a powerful chain designed to be sufficiently resistant to corrosion, wear and impact so that it can serve the purpose of removing massive trash under severe conditions. It is of the offset type, which can allow lengthening and shortening in units of even a single link.

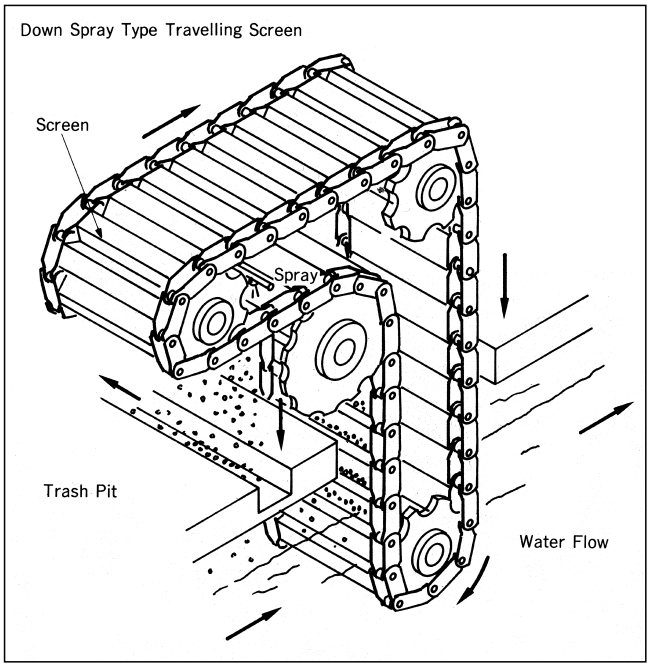

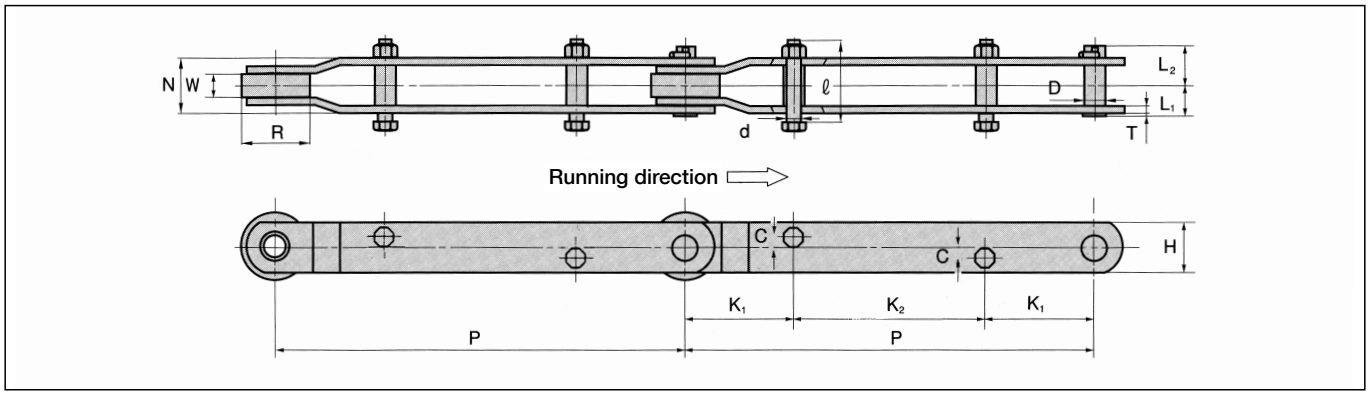

Unit (mm)

Chain No.	Avg. tensile strength		Pitch	Chain		Roller dia.	Pin			Plate		Bolt					Weight (kg/Link)
				Inner width	Outer width		Dia.	Length		Thickness	Height	Dia.	Length	Position			
	kN	kgf	P	W	N	R	D	L_1	L_2	T	H	d	ℓ	K_1	K_2	C	
DK 4520S	333	34,000	450	40.3	80	90	20	43	55	9	65	20	116	130	190	13	7.5
DK 6030S	343	35,000	600	40.3	80	100	30	43	58	9	75	20	116	160	280	13	10.5
DK 6032S	470	48,000	600	55.2	108	100	32	57	72	12	80	20	144	165	270	13	14.5
DK 6034S	588	60,000	600	52.6	122	100	34	64	79	16	80	20	158	165	270	13	18.0
DK 6036S	706	72,000	600	64.6	134	115	36	70.5	85	16	95	24	175	165	270	13	23.0
DK 6040S	784	80,000	600	85.0	166.5	125	40	89.3	101.3	19	100	24	215	185	230	13	33.0

Note: Ask us for the delivery time.

Rake Chain

Another machine used for the same purpose as the traveling water screen to remove sea water impurities is a bar screen with rotary rakes. The screen is intended to remove impurities more coarse than those removed by the traveling water screen. Impurities caught by a fixed bar screen are removed by rakes and discarded into buckets. A Rake Chain moves the rakes and buckets along the bar screen. As the traveling water screen, resistance to corrosion and brittle fracture are primary design considerations.



Rake Chain used for bar screen consists of the parts made of stainless steel and the link plate coated with a special synthetic resin, and it is highly resistant to corrosion as well as wear.

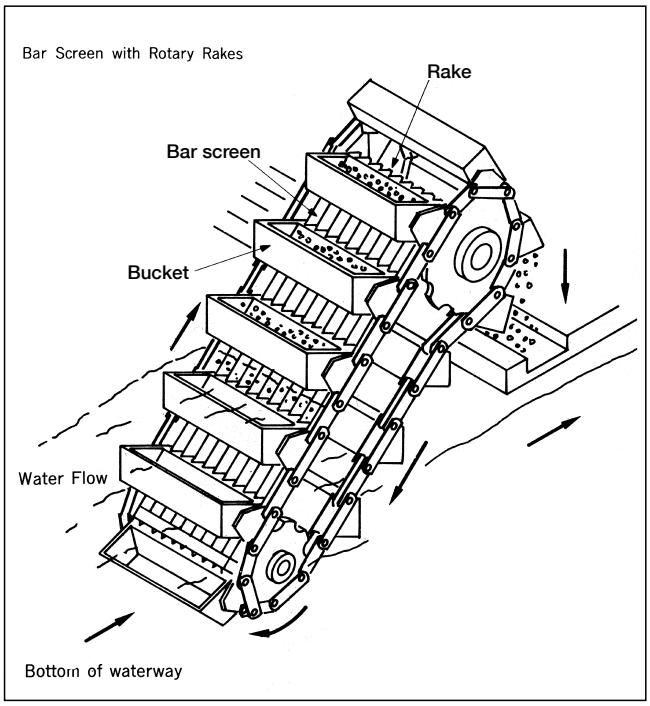

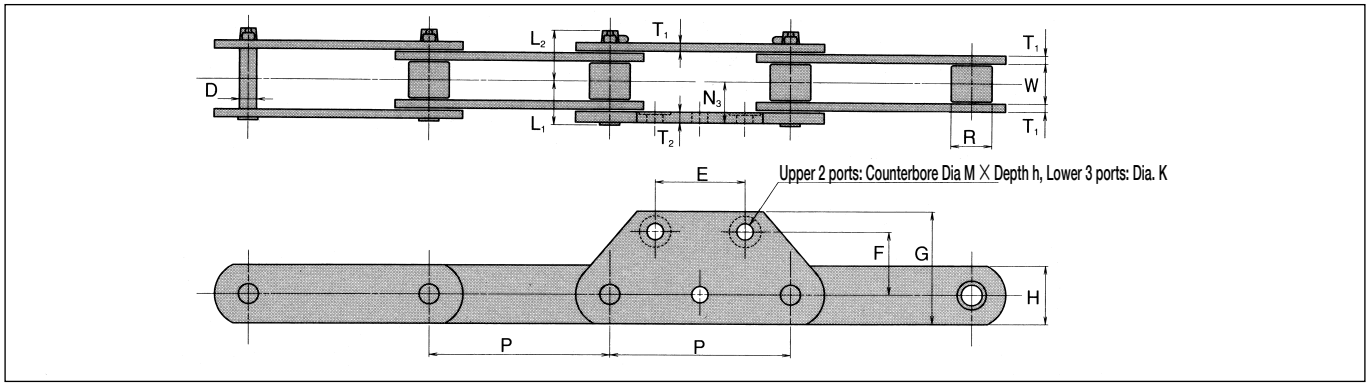

Unit (mm)

Chain No.	Avg. tensile strength		Pitch	Roller link width	Roller dia.	Pin dia.	Plate width	Plate thickness	Pin length		Attachment							
	kN	kgf	P	W	R	D	H	T_1	L_1	L_2	N_3	T_2	E	F	G	K	M	h
DK 20019	299	30,500	200	45	45	19	65	9	48	56	45	12	100	70	125	18	35	3
DK 20023	392	40,000	200	55	55	23	75	9	53	61	50	12	100	100	165	18	35	3
DK 25027	490	50,000	250	55	65	27	80	12	60.5	68.5	57.5	16	180	110	180	22	43	4

Note: Ask us for the delivery time.

Sewage Treatment Chain (WS or WAS Type Chain)

Chains used for collecting accumulated sediment in setting basins and sedimentation basins or removing the collected sediment in sewage treatment facilities and other water treatment facilities require especially high resistance to corrosion and wear since they are directly exposed to sewage and sludge. A dirt removing chain is moved at a relatively fast speed on an almost vertically installed rail, though the operation frequency is low, so WS Type Roller Chain is used. Conversely, a chain for raking up and/or out dirt is driven at a very slow speed and does not require rollers, so WAS Type Bush Chain is used.
Eighteen kinds of WS Type and six kinds of WAS Type Chain are available.

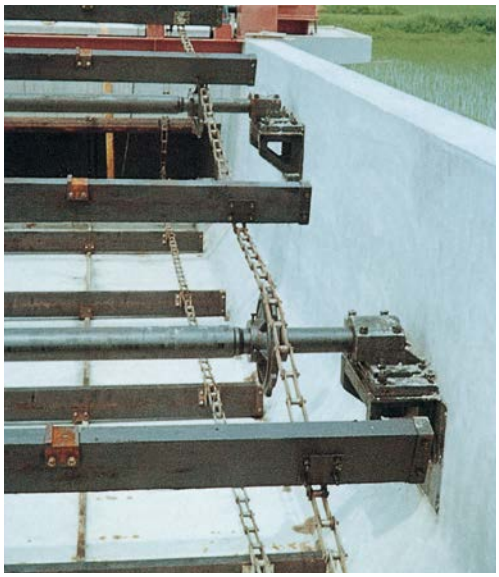

(a) WS Type Roller Chain

A WS Type Roller Chain is designed to deliver high corrosion resistance and wear resistance for long service in the severe environment of water treatment applications.
Since the operating time of this kind of equipment is relatively short, pins and bushings of hardened stainless steel and other parts are made of special alloy steel to ensure smooth bending of the chain, and excellent wear and corrosion resistance.

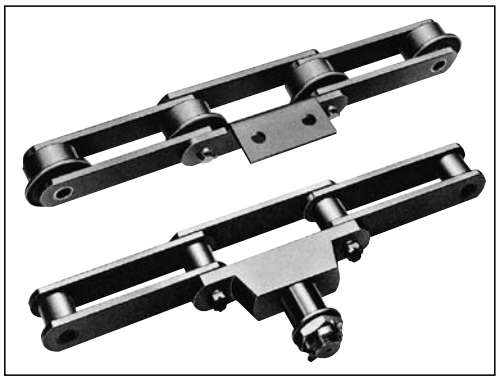

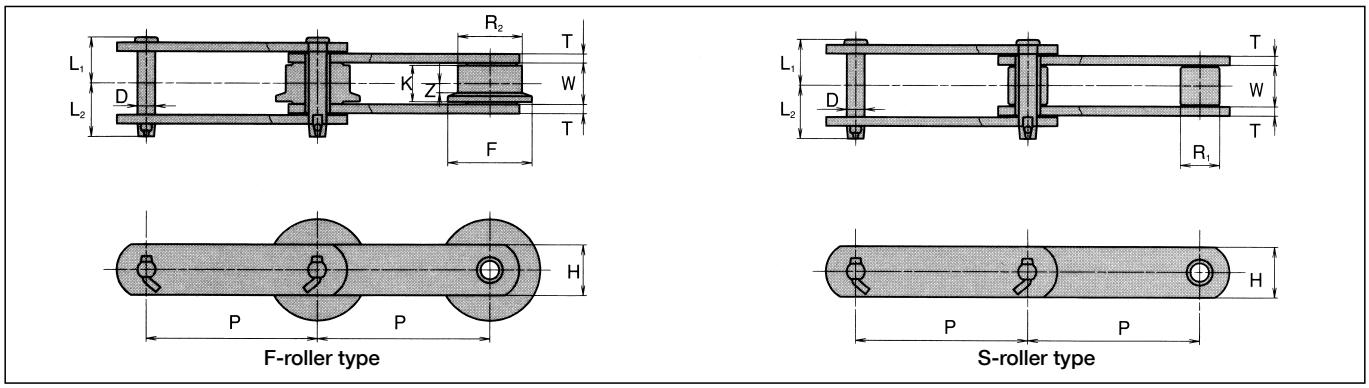

Unit (mm)

Chain No.	Avg. tensile strength				Pitch	Roller link width	S-roller dia.	F-roller				Pin			Plate		Approx. weight (kg/m)
	Standard type		Anti-corrosion type														
	kN	kgf	kN	kgf	P	W	R_1	R_2	F	K	Z	D	L_1	L_2	T	H	
DK WS 14152F	147	15,000	122	12,500	152.4	27.6	—	44.5	60	17	5.5	11.3	31.6	35.0	6	28.6	6
DK WS 21152F	215	22,000	176	18,000	152.4	30.6	—	50.8	65	20	6.5	14.5	32.6	38.0	6	38	7.8
DK WS 28152F	279	28,500	264	27,000	152.4	36.5	—	65	85	24	8.0	15.9	40.4	47.1	8	45	14.8
DK WS 38152F	382	39,000	323	33,000	152.4	37.5	—	69.9	90	25	8.5	19.1	45.6	52.9	9	50	17.2
DK WS 14152S	147	15,000	122	12,500	152.4	27.6	22.2	—	—	—	—	11.3	31.6	35.0	6	28.6	4
DK WS 21152S	215	22,000	176	18,000	152.4	30.6	28.8	—	—	—	—	14.5	32.6	38.0	6	38	5.7
DK WS 28152S	279	28,500	264	27,000	152.4	36.5	34.9	—	—	—	—	15.9	40.4	47.1	8	45	9.6
DK WS 38152S	382	39,000	323	33,000	152.4	37.5	40.1	—	—	—	—	19.1	45.6	52.9	9	50	12.2
DK WS 51152S	509	52,000	460	47,000	152.4	57.6	44.5	—	—	—	—	22.5	56.7	62.8	9	65	18

Note: Ask us for the delivery time.

A2 Attachment Type Ⅰ

Unit (mm)

Chain No.	K	N	S	C	O	X	T_L	ℓ_1	d_o	Additional weight per unit (kg)
DK WS 21152F	60	100	32	55	15	70	8	41.5	M10	0.5
DK WS 28152F	60	100	38	65	19	85	9	51.0	M12	0.6
DK WS 38152F	60	100	45	70	19	90	12	58.5	M16	1.0

Note: Ask us for the delivery time.

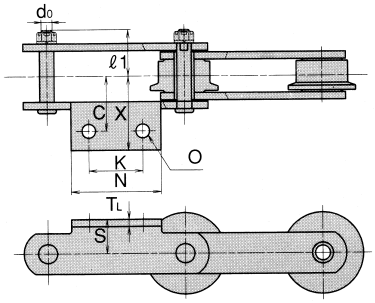

A2 Attachment Type Ⅰ

A2 Attachment Type Ⅱ

Unit (mm)

Chain No.	K	N	S	C	O	X	T	Additional weight per unit (kg)
DK WS 14152F	60	90	28	50	12	79	6	0.26
DK WS 21152F	60	90	32	50	12	72	6	0.22
DK WS 28152F	60	100	38	60	15	82	8	0.35
DK WS 38152F	60	100	45	65	15	101	9	0.53

Note: Ask us for the delivery time.

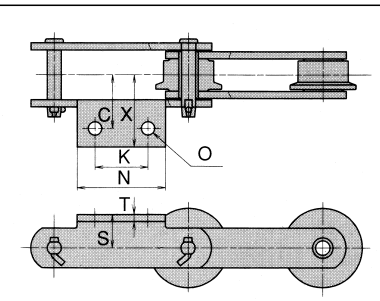

A2 Attachment Type Ⅱ

T Attachment

Unit (mm)

Chain No.	ℓ_1	Q	T_0	ℓ_2	T_1	d	d_1	d_o	Additional weight per unit (kg)
DK WS 14152S	38.0	60	30	119.0	16	25	M20	M 8	1.1
DK WS 21152S	41.5	70	40	148.5	16	35	M27	M10	1.9
DK WS 28152S	51.0	78	44	164.5	20	40	M30	M12	2.8
DK WS 38152S	58.5	78	46	173.0	24	45	M36	M16	3.3
DK WS 51152S	68.5	95	50	204.5	24	50	M45	M16	5.3

Note: Ask us for the delivery time.

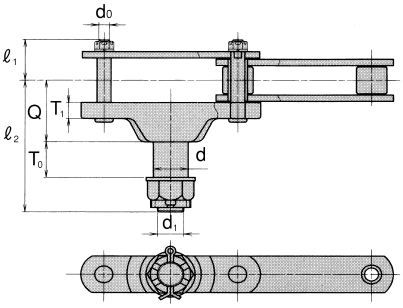

T Attachment

(b) WAS Type Bush Chain

Heat treated stainless steel provides this chain with excellent performance for corrosion resistance and wear resistance.

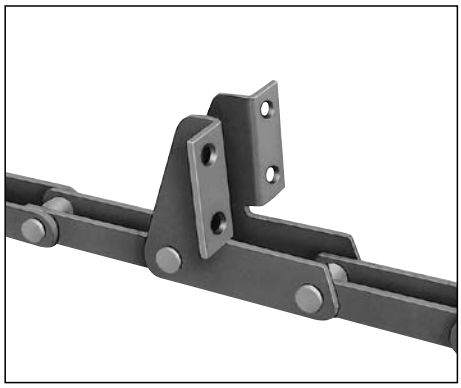

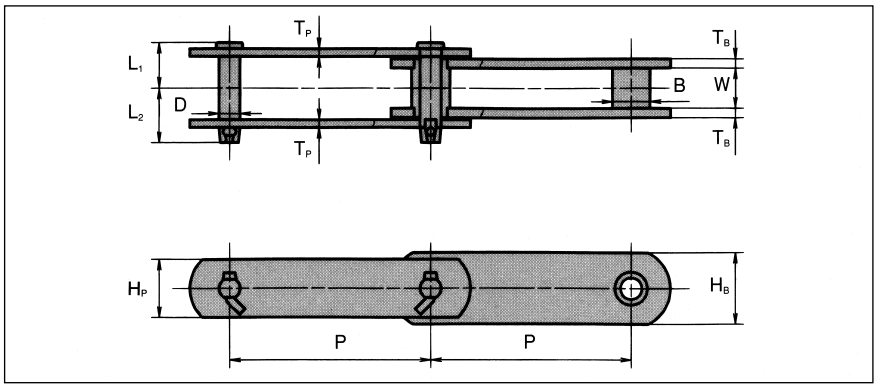

Unit (mm)

Chain No.	Avg. tensile strength		Pitch	Roller link width	Bush	Pin			Outer link		Inner link		Approx. weight (kg/m)
	kN	kgf	P	W	B	Dia. D	Length L_1	Length L_2	Thickness T_P	Height H_P	Thickness T_B	Height H_B	
DK WAS 13078B	132	13,500	78.11	26	23	12.7	27.9	33.3	5	33	5	36	5.2
DK WAS 13103B	132	13,500	103.2	26	23	12.7	27.9	33.3	5	33	5	36	4.6
DK WAS 15152B	147	15,000	152.4	26	24	13.5	29.4	34.3	5	36	6	38	4.8
DK WAS 19152B	186	19,000	152.4	30	26	14.5	32.6	37.5	6	38	6	44	5.9
DK WAS 25152B	245	25,000	152.4	30	29	15.9	34.1	40.9	6	44	7	54	7.9
DK WAS 35152B	343	35,000	152.4	38	35	19.1	40.6	49.0	7	54	7	60	10.9

Note: Ask us for the delivery time.

SF4 Attachment

Unit (mm)

Chain No.	2C	2X	S	S_1	S_2	J	S_3	O	T	Additional weight per unit (kg)
DK WAS 13078B	90	130	110	35	55	38	28	14	5	0.6
DK WAS 13103B	90	130	110	35	55	52	28	14	5	0.7
DK WAS 15152B	100	140	155	65	70	76	35	14	5	1.2
DK WAS 19152B	100	140	155	65	70	76	38	14	6	1.4
DK WAS 25152B	100	140	155	65	70	76	38	14	6	1.4
DK WAS 35152B	110	150	160	65	75	76	40	14	7	1.6

Note: Ask us for the delivery time.

LA1 Attachment

Unit (mm)

Chain No.	d_0	C	X	L_1	L_2	N	O	T_A	T_L	Additional weight per unit (kg)
DK WAS 13078B	M10	55	77	28.9	42.9	40	19	16	12	0.4
DK WAS 13103B	M10	55	77	28.9	42.9	56	19	16	12	0.6
DK WAS 15152B	M12	55	77	30.4	44.0	68	19	16	12	0.8
DK WAS 19152B	M12	65	90	33.6	51.4	80	24	20	16	1.2
DK WAS 25152B	M14	65	90	35.1	53.9	80	24	20	16	1.4
DK WAS 35152B	M16	75	102	42.6	62.5	80	26	24	19	2.0

Note: Ask us for the delivery time.

Long pin type

Unit (mm)

Chain No.	d	T_0	Q	L_1	L_2	d_0	d_1	t	Additional weight per unit (kg)
DK WAS 13078B	12	12	24.4	27.9	49.4	M10	22	1.5	0.06
DK WAS 13103B	12	12	24.4	27.9	49.4	M10	22	1.5	0.06
DK WAS 15152B	13	12	25.4	29.4	51.4	M12	26	2.0	0.10
DK WAS 19152B	14	16	28.6	32.6	59.4	M12	26	2.0	0.11
DK WAS 25152B	15.5	16	29.6	34.1	62.4	M14	30	2.5	0.14
DK WAS 35152B	18.5	19	34.6	40.6	72.0	M16	32	2.5	0.20

Note: Ask us for the delivery time.

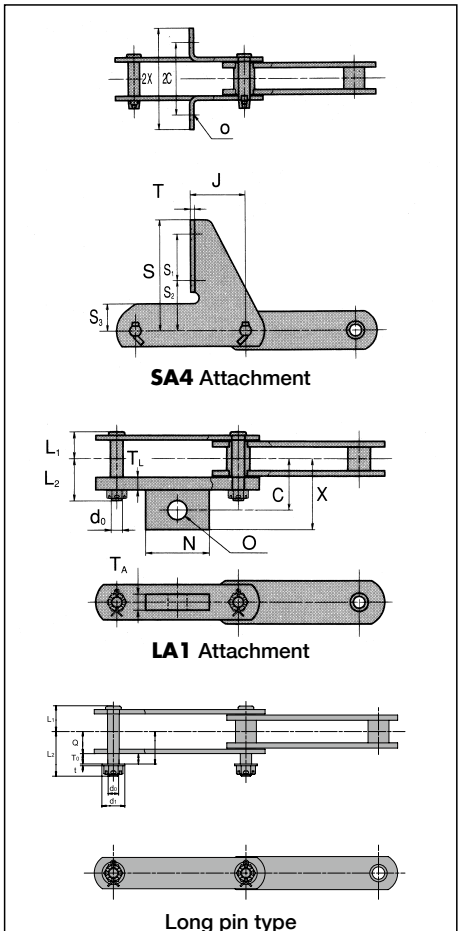

SA4 Attachment

LA1 Attachment

Long pin type

BF Type Bushing Chain for Water Treatment Drive Unit

This chain is used to connect water treatment equipment to a power source. In the past, JIS/ ANSI type roller chains were used. For enhanced corrosion resistance, all the components are now made of 13Cr stainless steel. Since the chain is operated at a slow speed, a bushing chain without rollers is used. The sprockets are interchangeable with JIS/ ANSI roller chain sprockets.
We manufacture seven kinds of BF Type Bushing Chains in a range from DID120 to DID240, including heavy-duty type.

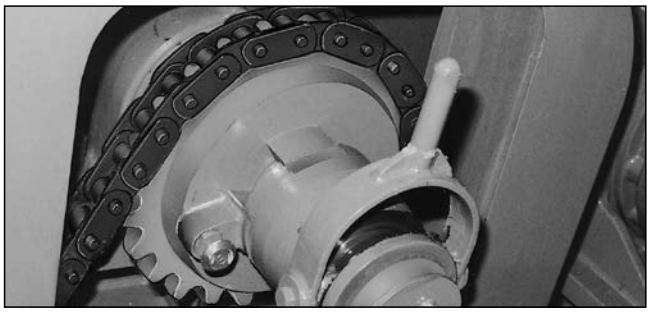

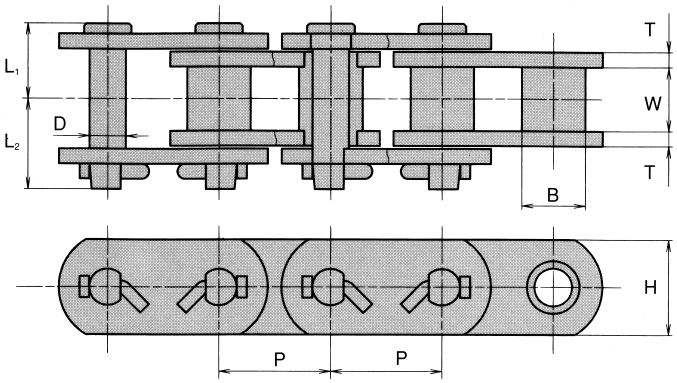

Unit (mm)

Chain No.	Avg. tensile strength		Pitch	Roller link width	Bush dia.	Pin			Plate		Approx. weight (kg/m)
	kN	kgf	P	W	B	Dia. D	Length L_1	Length L_2	Thickness T	Height H	
DID 120BF	107	11,000	38.10	25.4	22.23	12.7	27.3	32.3	5	33	6.8
DID 140BF	137	14,000	44.45	25.4	25.40	14.5	29.8	35.9	6	38	9.5
DID 160BF	181	18,500	50.80	31.7	28.58	15.9	33.7	40.5	6	44	10.9
DID 160BFH	240	24,500	50.80	31.7	28.58	15.9	37.7	44.5	8	45	13.7
DID 200BF	308	31,500	63.50	38.1	39.69	22.2	45.5	51.8	9	54	20.7
DID 200BFH	353	36,000	63.50	38.1	39.69	22.2	47.5	53.8	10	57	21.0
DID 240BF	392	40,000	76.20	47.6	47.62	25.4	53.3	58.6	10	63.5	27.8

Note: Ask us for the delivery time.

Water treatment flow chart

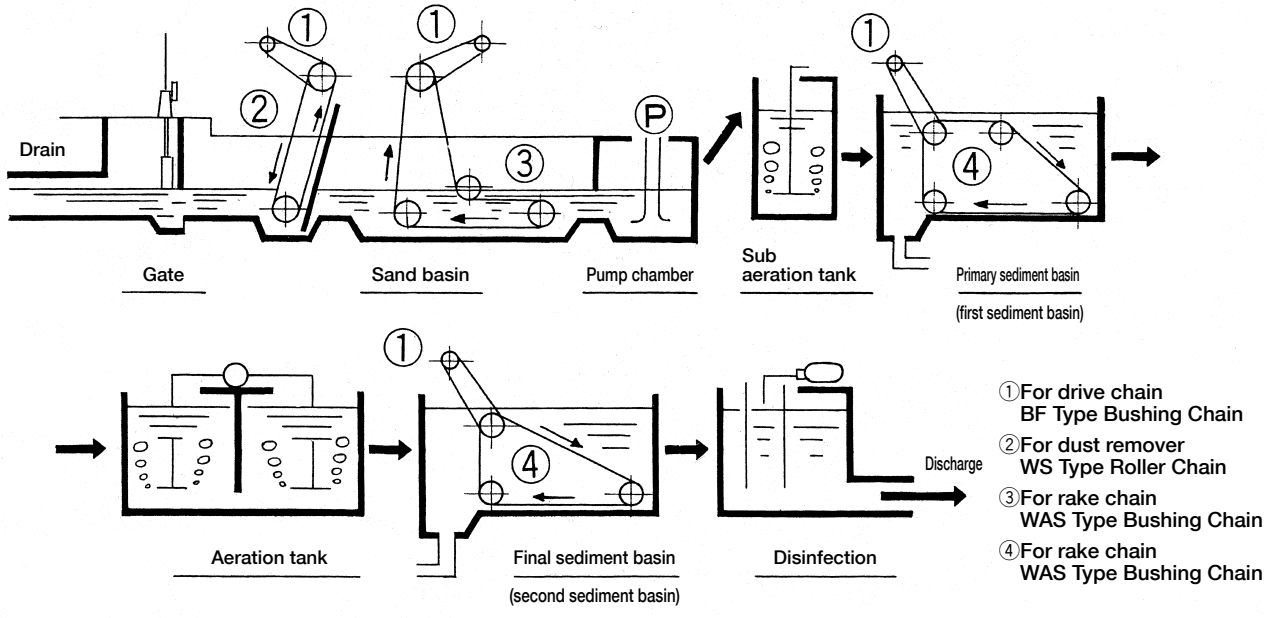

3D Bending Conveyor Chain

In general, a chain is bent in transverse direction only. However, a 3D Bending Conveyor Chain can be structurally bent not only horizontally but also vertically. It is used for a conveyor line which moves vertically and changes in direction.

X Type Chains for Power Trolleys & Free Conveyors

X-type Chains are used for power trolleys & free conveyors. They are drop-forged rivetless chains featuring high strength, lightweight and easy removal of components. The bottom left photo shows an X-type Chain used as a trolley conveyor with only one rail.
The bottom right photo shows an X-type Chain used for a power & free conveyor. An additional rail is installed to receive the load for higher transfer capability.
A power & free conveyor generally has a so-called stop and go function to connect and disconnect conveyed materials with and from the chain, so that the conveyed materials can be temporarily stopped, mixed and stored.
Three kinds of X-type Chains are available according to required strength.

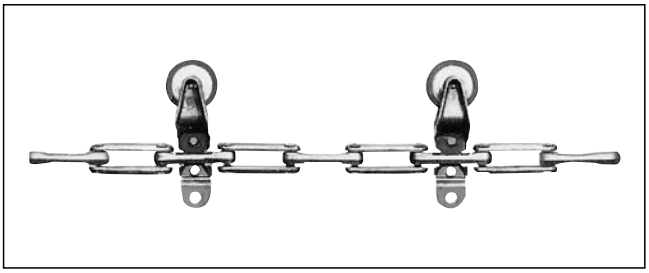

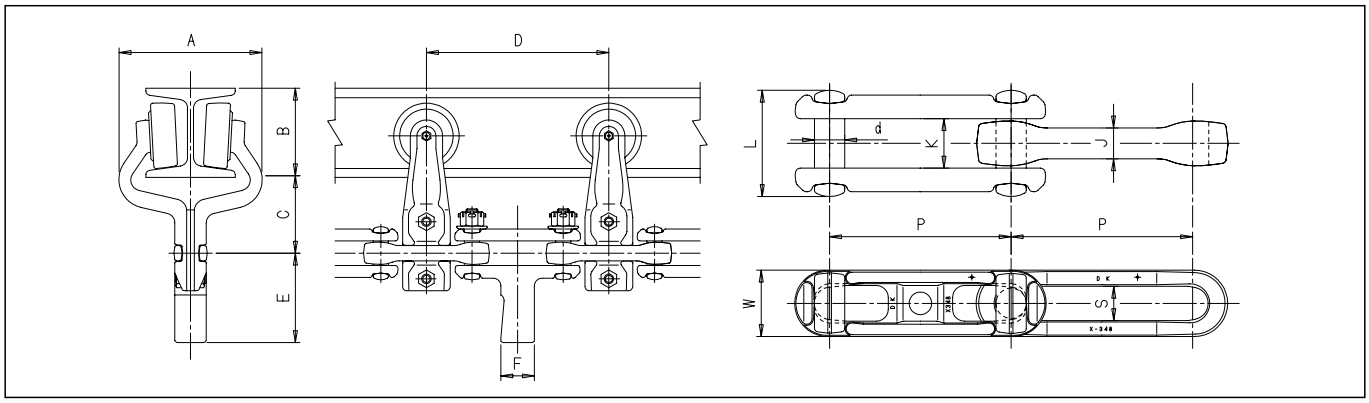

Unit (mm)

Chain No.	Avg. tensile strength		Pitch	L	W	d	J	K	S	Approx. weight	Power trolley	A	B	C	D	Dimension of dog	
	kN	kgf	P							(kg/m)	No.					E	F
DK X348	107	11,000	76.2	45	27	12.7	12.7	20.8	14	3.5	**TL-33**	118	75	65	152.4	75	28.2
DK X458	215	22,000	101.6	56	35.5	16.2	15.9	27.5	17	5.0	**TL-44**	140	100	82	203.2	71	31.8

Note: Ask us for the delivery time.

Trolley conveyor system



Power & free conveyor system



Z type Chain for Light Load Trolley Conveyors

A Z type Chain for trolley conveyors is used for service similar to that of X type Chains described on the previous page, but is suitable for light loads. It is widely used in conveyors supplying parts, and devices for storing and unloading parts on automobile assembling lines.





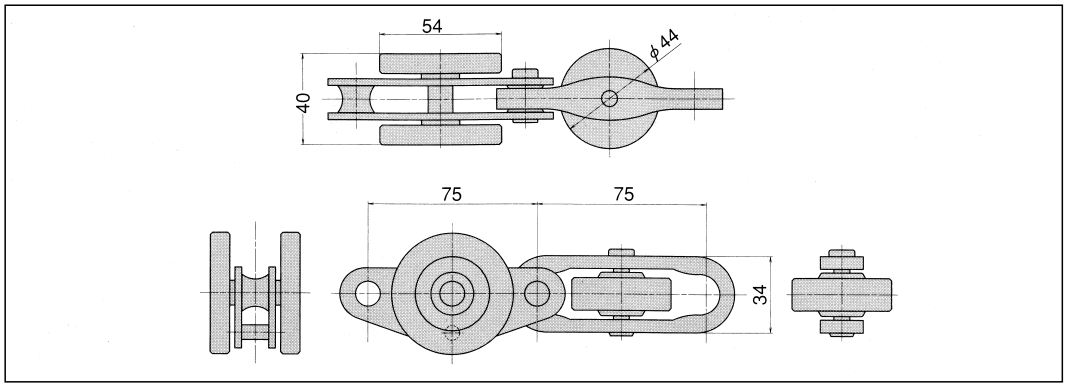

TYPE	Avg. tensile strength		Max. allowable load	Max. 1 point suspending load	Approx. weight	Vertical radius of curvature	Horizontal radius of curvature
	kN	kgf	(kgf)	(kgf)	(kg／m)	(mm)	(mm)
Z-75	49.0	5,000	500	25	4.6	600	600

Note: Ask us for the delivery time.

For example, the figure below shows that Z-type Chain running in C-section lightweight steel.

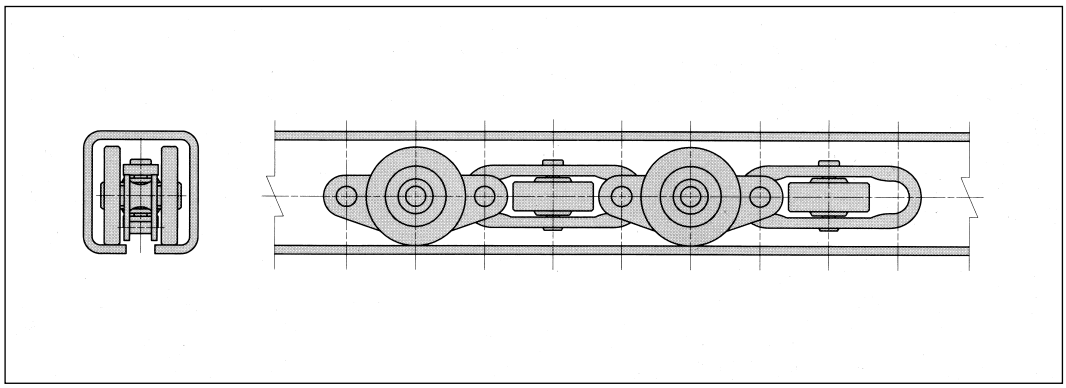

FH Type Chain for Freeyor

An FH Type Chain is used for the same purpose as an X type Chain and Z-type Chain. While X type Chain is designed for heavy loads and Z type Chain is for light loads, FH Type Chain is used for intermediate loads. While X type Chain and Z type Chain can be vertically bent only slightly, FH type Chain can be bent both vertically and horizontally, which makes it suitable for a conveyor line moving vertically. We manufacture three kinds of FH type Chains different in pitch.

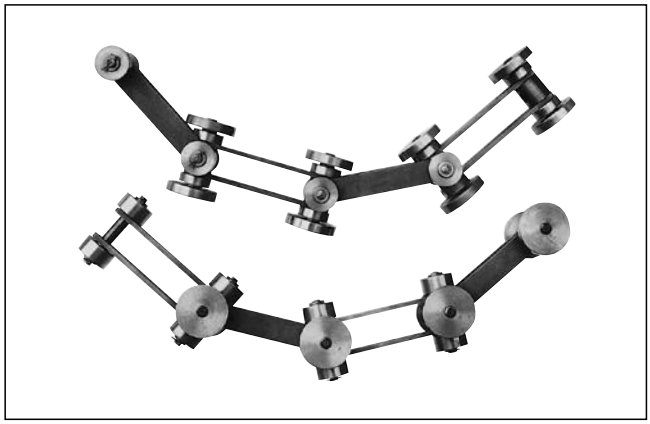

Chain No.	Pitch **P** (mm)	Max. allowable tension	
		kN	kgf
DK FH-100	100	6.86	700
DK FH-125	125	6.86	700
DK FH-150	150	6.86	700

Note: Ask us for the delivery time.

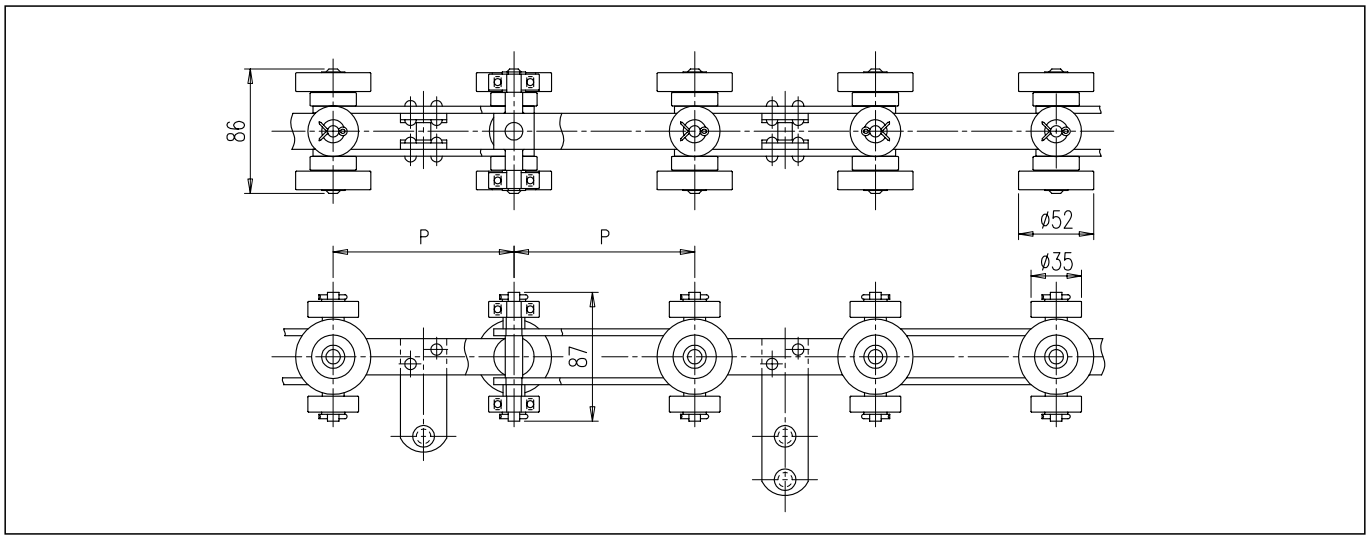

For example, the figure below shows a condition that FH-type Chain runs in the rail made of two C-section lightweight steel.

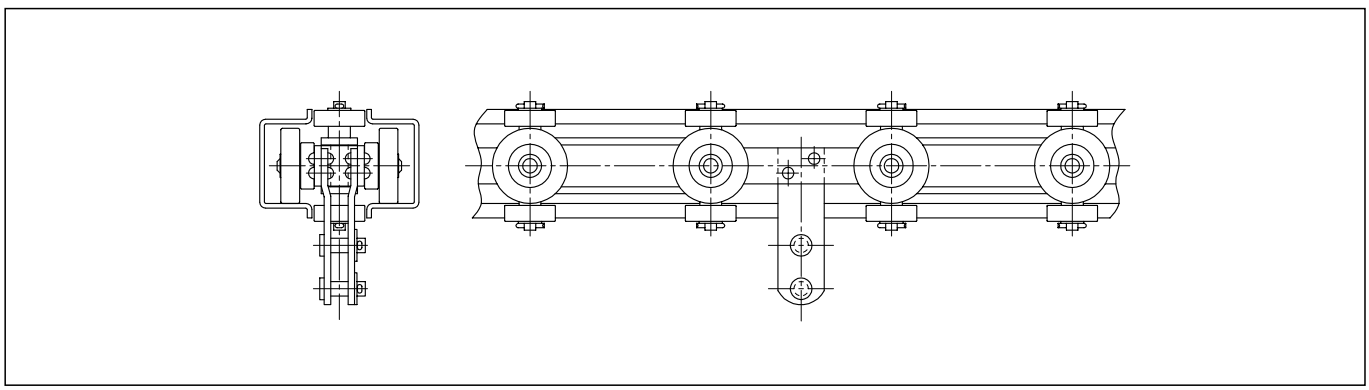

Towline Low-Selec-Tow Chain

A towline conveyor has a mechanism to convey dollies caught by a chain buried in the floor. Our chain for towline conveyor is called LST chain (Low selec tow chain).
LST Chain can be bent horizontally and can also move on a slight incline. It is made by forging, and a recess for hooking a dog is formed at the center of each link.



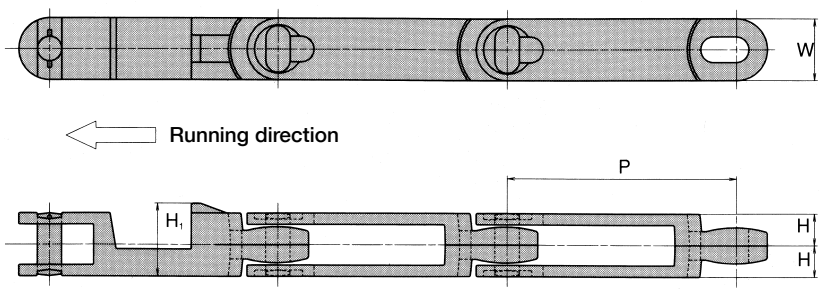

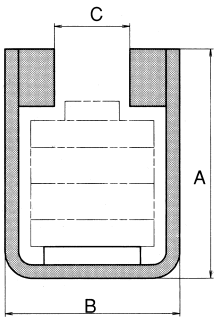

Cross section of track

Unit (mm)

Chain No.	Pitch P	W	H	H_1	Avg. tensile strength		Approx. weight	Cross section of truck		
					kN	kgf	(kg／mm)	A	B	C
L.S.T 6"	152.4	40.9	21	48.4	211	21,600	7.5	76.2	58.0	25.0

Note: Ask us for the delivery time.

1. Lower chain link
2. Top chain link
3. Lock pin
4. Pusher dog
5. Chain pin
6. Pusher dog connecting pin

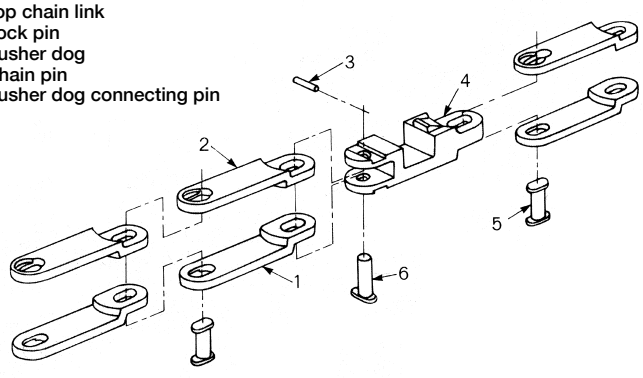

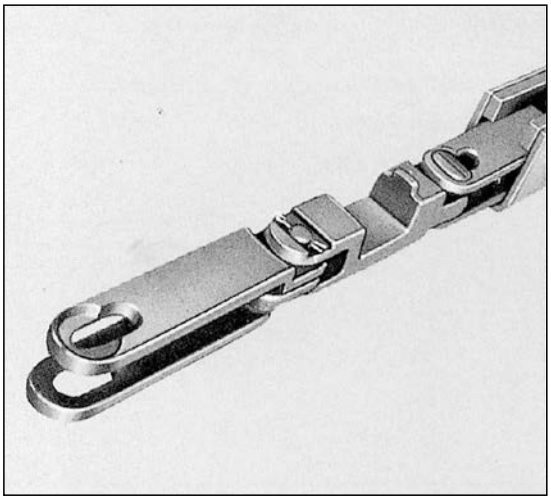

Booster Chain for Rivetless Chain

A booster chain for rivetless chain is used for rivetless drive chain by the dogs on the booster chain.
Rivetless chain is the general name of X type Chain for Trolleys and Power & Free Conveyors.

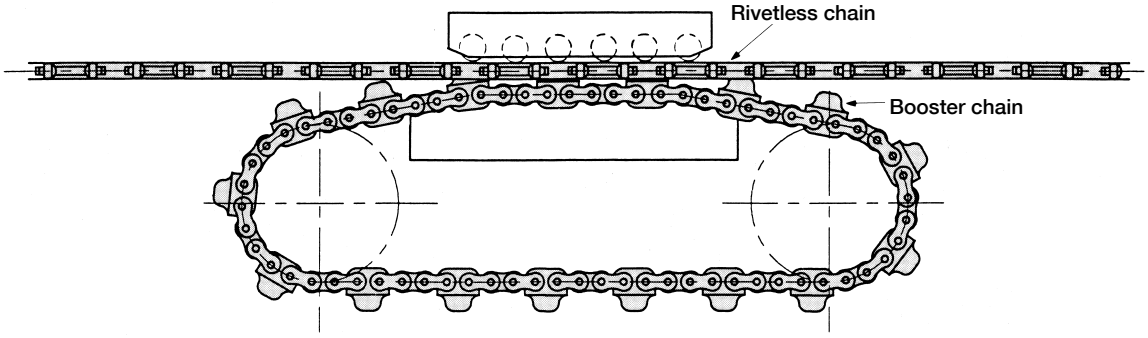

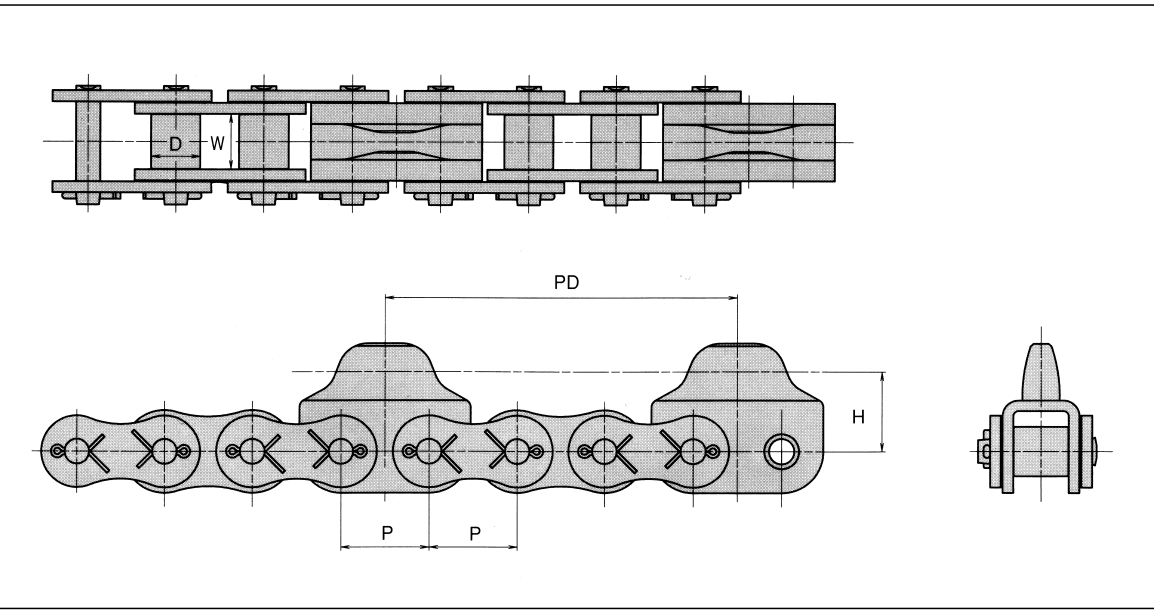

Unit (mm)

Chain No.	Rivetless chain No.	Pitch **P**	Roller link width **W**	Roller dia. **D**	Dog pitch **PD**	Chain height **H**
DID 120CP 4P DOG	DK X348	38.1	25.4	22.23	152.4	40
DID 160CP 4P DOG	DK X458	50.8	31.75	28.58	203.2	46

Note: Ask us for the delivery time.

Draw Bench Chain

Since a chain for drawing a rod in a draw bench requires high strength even though the speed is low, the plates are robust. For example, the following types are designed and supplied to suit for various draw benches.

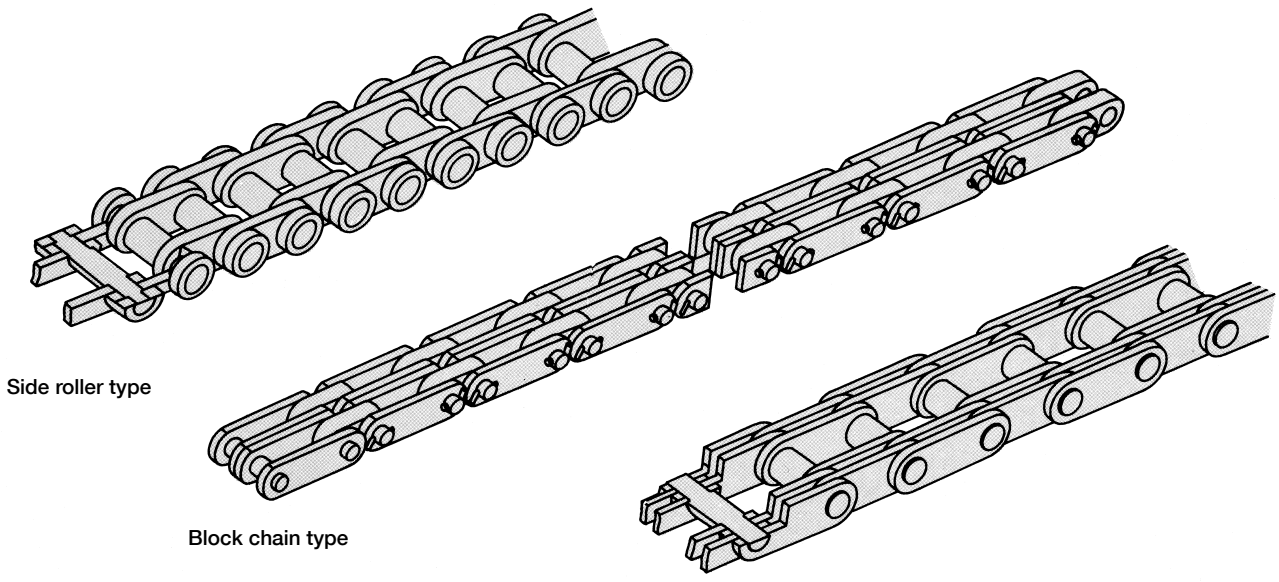

Access window (Dr. WINDOW) is a welded access panel for maintenance and checking of the conveyor. There are three types and 17 sizes altogether, and safety nets can be attached to standard and high-neck types.

Access Window (Dr. WINDOW)

Overview and Dimenions

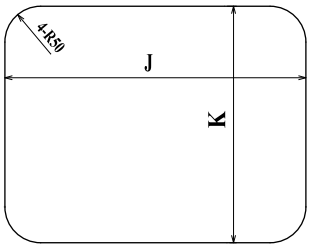

Notch dimensions

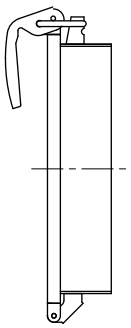

High-neck type / **IWH**

The frame has an extended height compared to the standard type. Optimal for placing at the bending parts of the conveyor line or parts applied with insulation material.

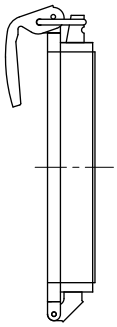

Deposit prevention type / **IWD**

This type is designed to prevent the deposit of materials like powder from the conveyor line.

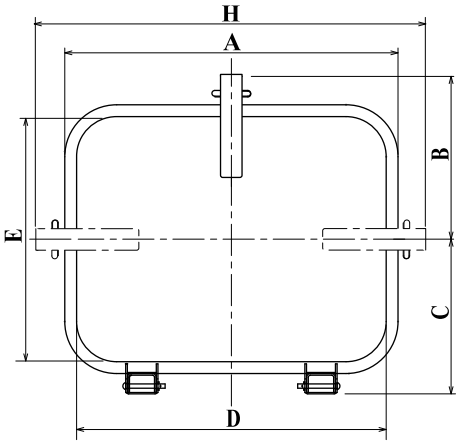

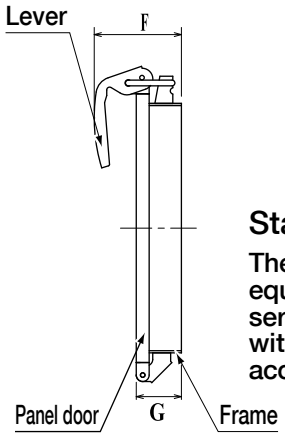

Standard type / **IW**

The unit is designed to fit the dimensions of the equipment to conduct maintenance and to the service environment. They are also available with metal safety nets for catching tools accidentally dropped.

Standard type / IW

＊The dimension for H are the add of the lever dimensions and A.
＊Weight do not include the safety net weight.

No.	Dimensions (Unit: mm)										Number of lever	Weight (kg)
	A	B	C	D	E	F	G	H	J	K		
IW250	295	112	100	262	112	112	63	—	250	100	1	3
IW300	345	152	140	312	192			—	300	180	1	4
IW420	465	227	215	432	342			—	420	330	1	7
IW480	525	302	290	492	492			—	480	480	2	10
IW800	845	227	215	812	342			—	800	330	2	11
IW1000	1045	277	265	1012	442			—	1000	430	3	16
IW1200	1245	327	315	1212	542			1312	1200	530	5	21

High-neck type / IWH

＊The dimension for H are the sum of the lever dimensions and A.
＊ Weight do not include the safety net weight.

No.	Dimensions (Unit: mm)										Number of lever	Weight (kg)
	A	B	C	D	E	F	G	H	J	K		
IWH250	295	112	100	262	112	162	113	—	250	100	1	3
IWH300	345	152	140	312	192			—	300	180	1	5
IWH420	465	227	215	432	342			—	420	330	1	8
IWH480	525	302	290	492	492			—	480	480	2	12
IWH800	845	227	215	812	342			—	800	330	2	14
IWH1000	1045	277	265	1012	442			—	1000	430	3	19
IWH1200	1245	327	315	1212	542			1312	1200	530	5	25

Deposit prevention type / **IWD**

No.	Dimensions (Unit : mm)									Number of lever (個)	Weight (kg)
	A	B	C	D	E	F	G	J	K		
IWD300	345	152	140	312	192	112	63	300	180	1	4
IWD420	465	227	215	432	342			420	330	1	7
IWD480	525	302	290	492	492			480	480	2	10

Metal safety net (for standard and high-neck types)

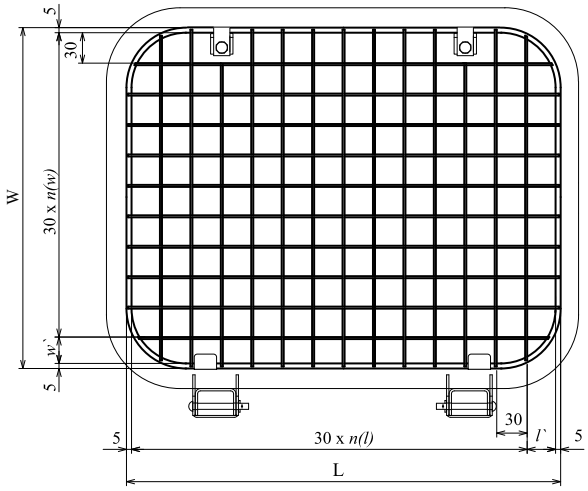

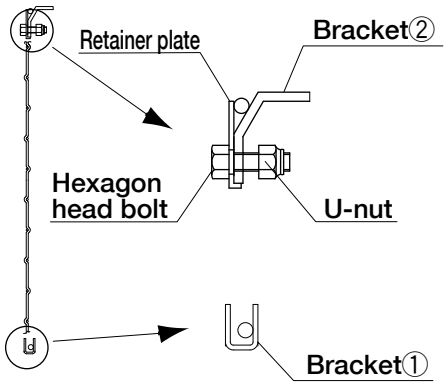

Metal safety net				Fittings		
No.	Dimensions (mm) L	Dimensions (mm) W	Material	Name	Dimension	Material
IW/IWH 300	308	186	Stainless Steel	Bracket①	——	Stainless Steel
IW/IWH 420	428	336		Bracket②	——	
IW/IWH 480	488	486		Retainer plate	——	
IW/IWH 800	804	336		Hexagon head bolt	M6 x 20L	
IW/IWH 1000	1004	436		U-nut	M6	
Wire dia. : 2.0, Number of wires : 30 x 30						

Line-up for service environment

Type		Standard (**IWH**)						High-neck (**IWH**)				Deposit prevention (**IWD**)	
Environment		Ambient temperature (**V**)		Heat resistant (**T**)		Corrosion resistant (**SS**)		Ambient temperature (**V**)		Heat resistant (**T**)		Ambient temperature (**V**)	Heat resistant (**T**)
Metal safety net		Not attached	Attached (**-N**)	Not attached	Attached (**-N**)	Not attached	Attached (**-N**)	Not attached	Attached (**-N**)	Not attached	Attached (**-N**)	Not attached	Not attached
Notch dimensions (J)	**250**	○	×	○	×	○	×	○	×	○	×	△	△
	300	○	○	○	○	○	○	○	○	○	○	○	○
	420	○	○	○	○	○	○	○	○	○	○	○	○
	480	○	○	○	○	○	○	○	○	○	○	○	○
	800	○	○	○	○	○	○	○	○	○	○	×	×
	1000	○	○	○	○	△	○	○	○	○	○	×	×
	1200	○	△	○	△	△	△	○	△	○	△	×	×

Note: Consult us for other types of specifications.

Indication

Place an order in the following pattern after confirming the service environment, dimensions, and the attachment of safety net.

Example
High-neck type + notch dimension: 300 mm
+ ambient temperature + safety net

→ **IWH300V-N** (Nominal indication)

Overview

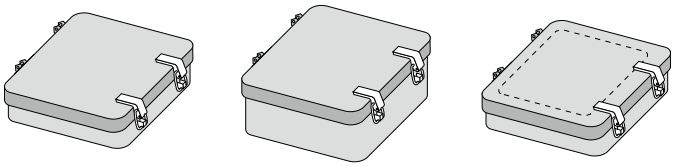

Standard type　High-neck type　Deposit prevention type

Photos of Conveyor Systems and Chains in Use

For improving operation efficiency and productivity, DID conveyors and DID physical distribution systems are the ideal equipment.
DID chain conveyors improve factory automation through accurate conveying capacity and excellent durability. Extensive studies of how to efficiently and economically convey a variety of materials has resulted in the manufacture and supply of high performance chain conveyors and physical distribution systems that deliver abundant handling and design advantages. These products are used in almost all industries including iron & steel, cement, chemical and the automobile industry.
DK conveyor chains are the most crucial item of the conveyor system. Materials are selected to suit respective applications and high precision components are solidly assembled by latest equipment. DID chains exhibit excellent toughness and wear resistance in maintaining the accuracy of the conveyor system for an extended period of time.
Introduced here are some of the conveyors and physical distribution systems using DK conveyor chains for improved conveyance.

Chain conveyors and physical distributions systems

- Conveyors for direct conveying
- Conveyors with buckets
- Conveyors with cases
- Conveyors for slung articles
- Conveyors for towing tracks or carriers

Conveyors for direct conveying

Coil conveyor

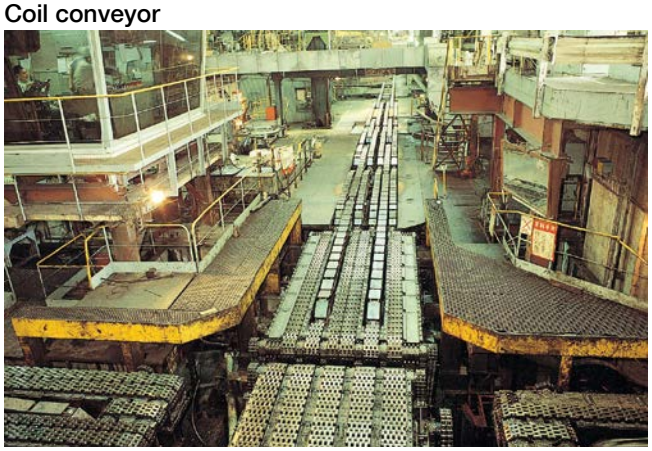

A conveyor for conveying more than ten tons of coils in iron foundries. Depending on the application, the coils are received in many different ways.

Steel panel conveyor



This conveyor is used in a cut plate packing line, and has jigs for receiving plates.

Slab conveyor



In ironworks, in addition to this slab conveyor, various conveyors suitable for respective steel forms such as steel plates and shaped steel are used.

Slat conveyor



This steel slat conveyor is used for assembly, finishing and inspection lines in automobile plants.

Long pan conveyor

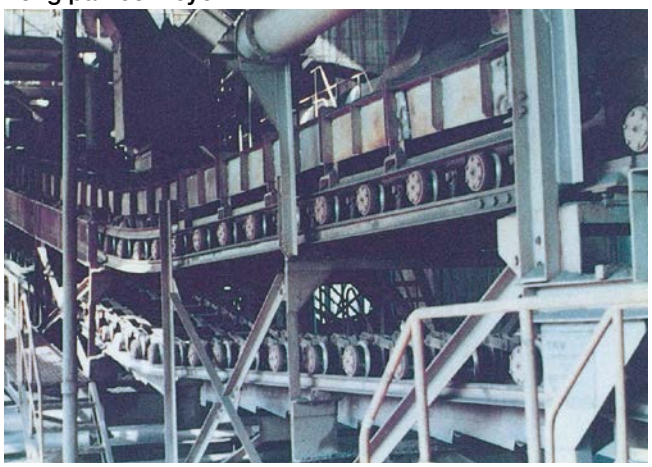

A long pan conveyor suitable for conveying high temperature abrasive bulk. This type of conveyor is highly rated by our customers due to the functions for slope conveying and intermediate discharge.

Apron conveyor



An apron conveyor used for conveying scraps, etc. It can also function as a feeder.

Pan conveyor



A pan conveyor used for conveying bulk on a slope, etc.

Hook-on conveyor



A conveyor used for incinerators that operate on fuel converted from waste tires.

Conveyors with buckets

Bucket elevator (NE type)

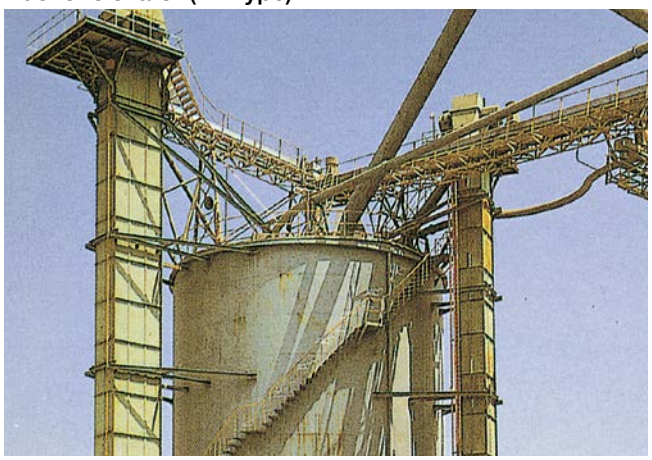

An NE type bucket elevator is used for conveying granular material and powder vertically or on a slope. The conveyance capacity ranges from a few tons to more than 1,000 tons per hour.

Bucket elevator (NSE type)

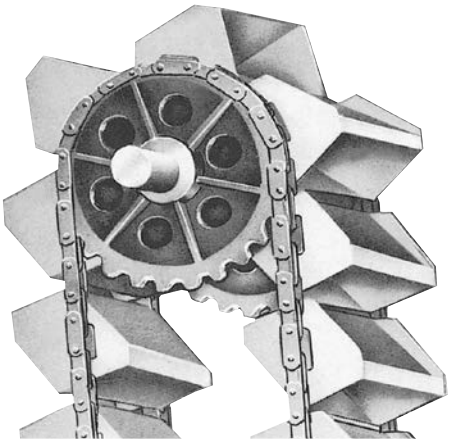

An NSE type bucket elevator allows high speed operation by adopting small pitch chains and sprockets with many teeth. The conveyance capacity can be doubled without changing the cases.

Photos of Conveyor Systems and Chains in Use

Conveyor with cases

Continuous flow conveyor

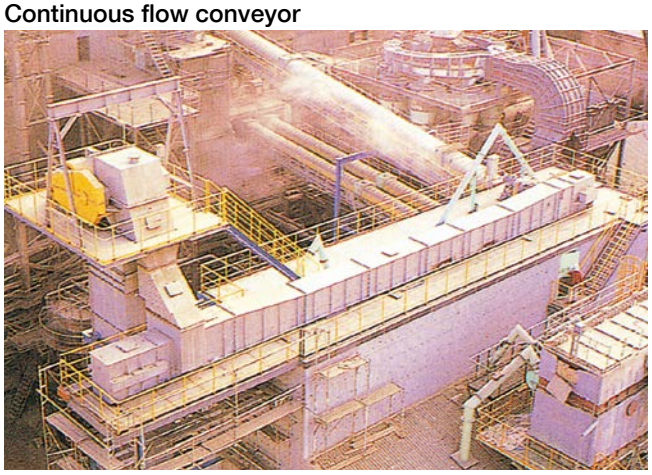

A continuous flow conveyor is used for conveying granular material and powder horizontally and/ or on a slope and/ or vertically.

Dust conveyor

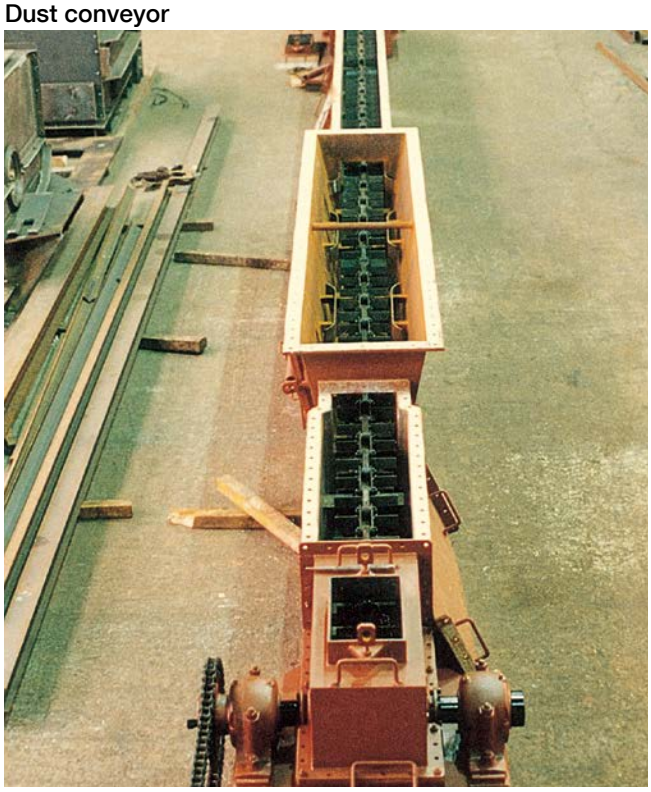

A dust conveyor is used mainly for conveying various kinds of collected dust. It differs from a continuous flow conveyor in the structure of the chain. Wear resistance is taken into account and the cases are designed to be more air-tight.

Scraper conveyor



A scraper conveyor, also called a flight conveyor, conveys articles contained in cases by scrapers installed on the chain. It is also used for conveying dirt in sewage treatment equipment and the ash of incinerated sludge.

Conveyors for slung articles

Power-and-free conveyor system



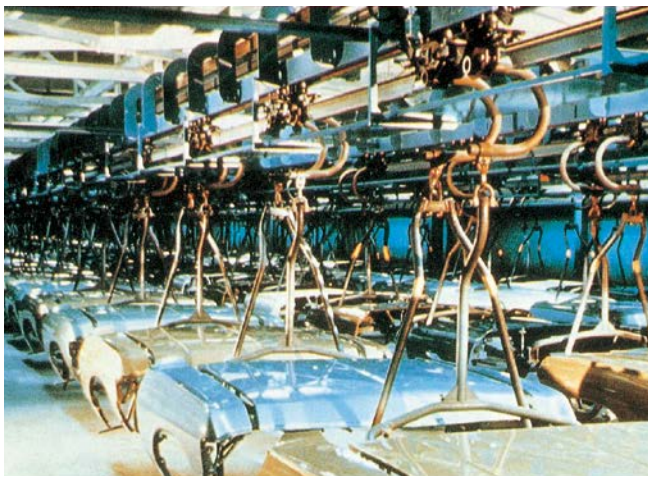



A power-and-free conveyor system conveys articles from one production process to another, and also functions to temporarily store the material between processes. Intermittent feeding and variable speed operations are also possible. The system can be used in various production processes.

Trolley conveyor system

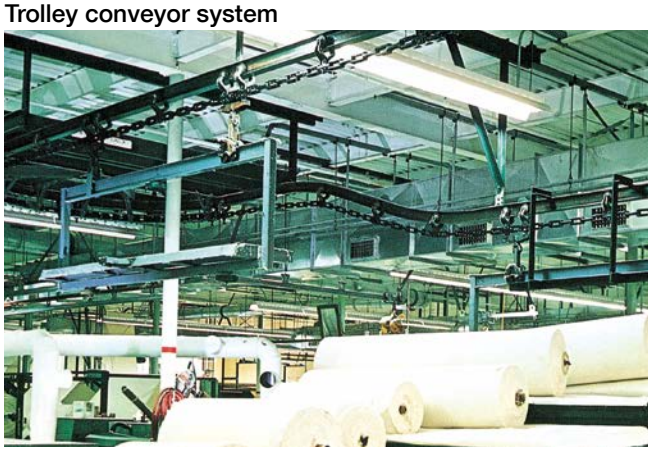

A trolley conveyor system is useful for conveying, processing, and storing articles which cannot be efficiently or economically handled by other conveyors.

Photos of Conveyor Systems and Chains in Use

Conveyors for towing tracks or carriers

Towline conveyor system for tires



Towline conveyor system for stocking



Towline conveyor system for carton transport



At a furniture manufacturer's warehouse, furniture carton boxes are being carried into the stock area while some are being unloaded for delivery in accordance with the conveyor management program.

Photos of Specialty Chains

V-pallet type coil conveyor chain

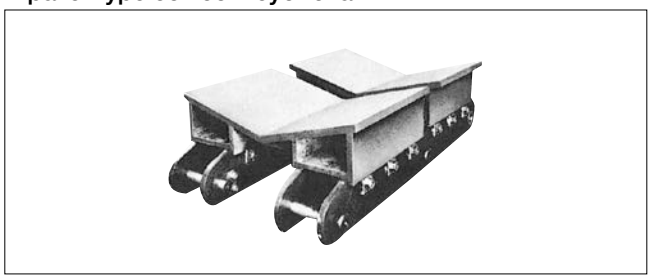

Saddle type coil conveyor chain

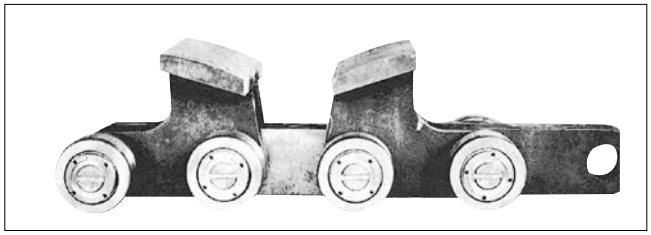

Bolt-mounted flat top coil conveyor chain

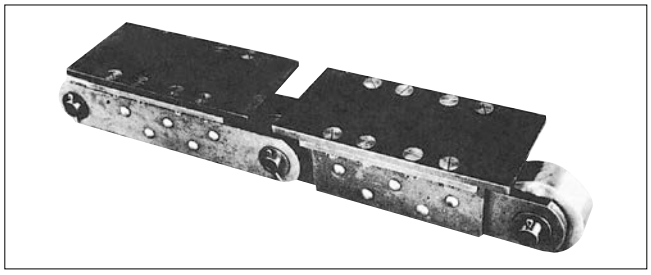

Cart conveyor chain with pusher dog

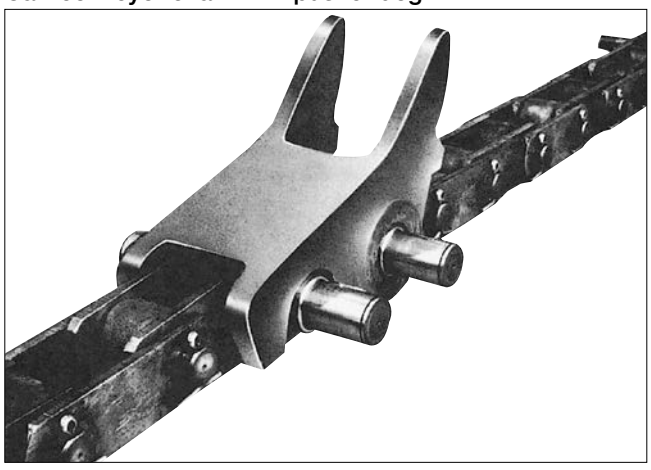

Multiplex block chain for crop conveyor

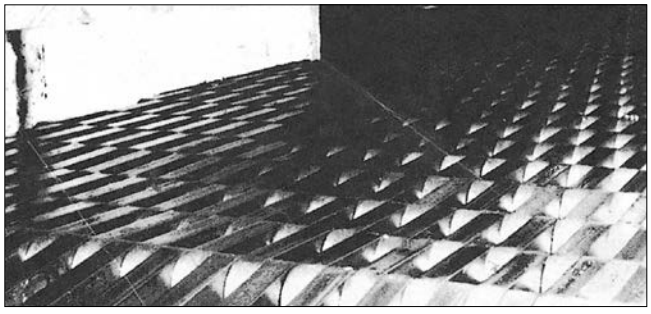

Conveyor chains with various dogs and/or attachments



DK Conveyor Chain Sprocket

To ensure that a chain conveyor will fully function, correct matching of conveyor chain and sprockets is necessary. For smooth engagement between the chain and sprockets and accurate feeding of the chain, note the following points for the designing of sprockets.

Number of teeth

Generally, smoother and more durable operation is ensured with larger number of teeth and sprockets, so ten or more teeth are recommended.
If the conveyance speed is extremely low (10 m/min or less) under a uniform load, the number of teeth can be decreased down to six.

Tooth form

For accurate and smooth operation of chain conveyors, two types of tooth forms are used depending on the sprocket size: for small sprockets (11 or less teeth) and large sprockets (12 or more teeth).

Processing of tooth form

The tooth form is usually processed by precision gas cutting. When using chains at high speed or at high stop accuracy, etc., specify machined finishing. If you need wear resistance, induction hardening of teeth is recommended.

Material

Name	Description	Applicable conveyor
Welded sheet steel	(Hub) Rolled steel for general structural purposes (SS400) (Teeth) Carbon steel for machine structural purposes (S43C or S45C)	Continuous flow conveyor, bucket elevator, coil conveyor, pan conveyor, apron conveyor, dust conveyor (roller chain type) etc.
Cast steel	Cast high tensile carbon steel (SCC3 etc.)	Large bucket elevator, coil conveyor, dust conveyor (block chain type) etc.
	Cast low manganese steel (SCMn3 etc.)	Dust conveyor (block chain type), drag chain conveyor etc.

- Hardening of teeth : All the driving sprockets are induction-hardened. Driven sprockets are treated to suit respective applications.
- Comparison: Use cast iron sprockets for server service conditions like heavy load and high-temperature. Please note that the cost of cast iron sprockets is higher than the other type, and that the delivery takes longer.

Chemical composition of materials (quoted from JIS)

Steel \ Material	C	Si	Mn	P	S
SS400	—	—	—	0.050 or less	0.050 or less
S43C	0.40～0.46	0.15～0.35	0.60～0.90	0.030 or less	0.035 or less
S45C	0.42～0.48	0.15～0.35	0.60～0.90	0.030 or less	0.035 or less
SCC3	0.30～0.40	0.30～0.60	0.50～0.80	0.04 or less	0.04 or less
SCMn3	0.30～0.40	0.30～0.60	1.00～1.60	0.04 or less	0.04 or less

Hub dimensions and machining of shaft hole and key slot

Sprocket standard hub dimensions for shaft diameters are listed on P321.
When a plurality of sprockets are used on the same phase, the key slots of the sprockets should be aligned. Specify this when ordering.
The sprockets can be delivered with the shaft holes as prepared. When you finish the shaft holes, refer to the bottoms of teeth.

Shaft diameter and hub dimensions

For "Shaft Diameter and Hub Dimensions", see P321.

[Welded sheet steel sprocket]



[Cast steel sprockets]



[Indication]

1. (Welded sheet steel sprocket) DK 32200 S－10 W
   - Brand name: DK
   - Chain size: 32200
   - Roller type: S
   - Number of teeth: 10
   - Welded sheet steel: W

2. (Cast steel sprocket) DK 65300 R－10
   - Brand name: DK
   - Chain size: 65300
   - Roller type: R
   - Number of teeth: 10

3. (Welded sheet steel sprocket) DK 75 H 300 M－12 W
   - Brand name: DK
   - Size: 75
   - Chain type: H
   - Chain pitch: 300
   - Roller type: M
   - Number of teeth: 12
   - Welded sheet steel: W
   - Chain size: 75 H 300

4. (Cast steel sprocket) DK 160 Z 300 M－12
   - Brand name: DK
   - Size: 160
   - Chain type: Z
   - Chain pitch: 300
   - Roller type: M
   - Number of teeth: 12
   - Chain size: 160 Z 300

Tooth Width of Conveyor Chain Sprockets (Standard)

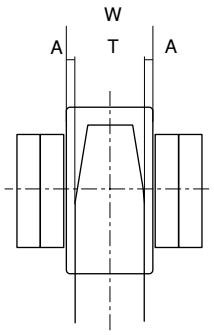

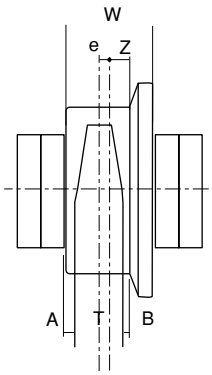

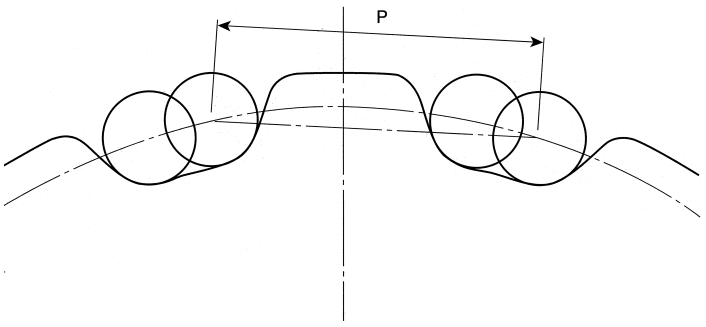

Chain No.	Pitch	W	R-roller		S-roller		M-roller		F-roller				
			T	A	T	A	T	A	e	Z	T	A	B
DK03075	75												
DK03100	100	15.9	12	1.95	12	1.95	—	—	2	3.3	9	1.45	0.8
DK03125	125		(12)	(1.95)	(12)	(1.95)	(—)	(—)			(9)	(1.45)	(0.8)
DK03150	150												
DK07075	75												
DK07100	100	22	16	3	16	3	—	—	2.5	4.5	12	2.5	1
DK07125	125		(17)	(2.5)	(16)	(3)	(—)	(—)			(11)	(3)	(1.5)
DK07150	150												
DK09100	100												
DK09125	125	25.6	19	3.3	19	3.3	19	3.3	3	5	12	3.8	2
DK09150	150		(20)	(2.8)	(20)	(2.8)	(20)	(2.8)			(13)	(3.3)	(1.5)
DK11100	100												
DK11125	125	30.6	22	4.3	22	4.3	22	4.3	3.5	6.5	16	3.8	2
DK11150	150		(24)	(3.3)	(23)	(3.8)	(23)	(3.8)			(17)	(3.3)	(1.5)
DK11200	200												
DK13150	150	36.5	28	4.25	28	4.25	28	4.25	4	8	19	4.75	2.5
DK13200	200		(29)	(3.75)	(28)	(4.25)	(28)	(4.25)			(19)	(4.75)	(2.5)
DK19200	200												
DK19250	250	36.5	28	4.25	28	4.25	28	4.25	4	8	19	4.75	2.5
DK19300	300		(30)	(3.25)	(29)	(3.75)	(29)	(3.75)			(20)	(4.25)	(2)
DK25200	200	51.8							5	12.5			
DK25250	250		40	5.9	40	5.9	40	5.9			28	6.9	3.5
DK25300	300		(43)	(4.4)	(42)	(4.9)	(42)	(4.9)			(30)	(5.9)	(2.5)
DK32200	200	57.6							6	13.5			
DK32250	250		45	6.3	45	6.3	45	6.3			32	6.8	3.5
DK32300	300		(48)	(4.8)	(47)	(5.3)	(47)	(5.3)			(34)	(5.8)	(2.5)
DK32450	450												
DK50250	250												
DK50300	300	67.4	55	6.2	55	6.2	55	6.2	7	15	36	8.7	4
DK50450	450		(56)	(5.7)	(56)	(5.7)	(56)	(5.7)			(36)	(8.7)	(4)
DK50600	600												
DK65300	300	75	65	5	65	5	65	5	8	16.5	43	8	3
DK65450	450		(65)	(5)	(65)	(5)	(65)	(5)			(43)	(8)	(3)
DK05101	101.6	22.2	16	3.1	16	3.1	—	—	—	—	—	—	—
			(17)	(2.6)	(17)	(2.6)	(—)	(—)			(—)	(—)	(—)
DK08066	66.27	27.6	—	—	22	2.8	22	2.8	—	—	—	—	—
			(—)	(—)	(21)	(3.3)	(21)	(3.3)			(—)	(—)	(—)
DK08101	101.6	27.6	22	2.8	22	2.8	22	2.8	3	6.5	—	—	—
			(21)	(3.3)	(21)	(3.3)	(21)	(3.3)			(—)	(—)	(—)
DK09101	101.6	27.6	22	2.8	22	2.8	22	2.8	—	—	—	—	—
			(21)	(3.3)	(21)	(3.3)	(21)	(3.3)			(—)	(—)	(—)
DK11152	152.4	30.8	22	4.4	22	4.4	22	4.4	3	7.5	16	4.4	2.5
			(24)	(3.4)	(24)	(3.4)	(24)	(3.4)			(17)	(3.9)	(2)
DK13101	101.6	31	25	3	25	3	25	3	—	—	—	—	—
			(25)	(3)	(25)	(3)	(25)	(3)			(—)	(—)	(—)
DK19152	152.4	36.5	28	4.25	28	4.25	28	4.25	4	8	19	4.75	2.5
			(30)	(3.25)	(29)	(3.75)	(29)	(3.75)			(21)	(3.75)	(1.5)
DK25152	152.4	37.5	28	4.75	28	4.75	28	4.75	4	8.5	19	5.25	3
			(30)	(3.75)	(30)	(3.75)	(30)	(3.75)			(20)	(4.75)	(2.5)

( ) Outer dimension : Welded sheet steel type ( ) Inner dimension : Cast steel type

Tooth Width of Conveyor Chain Sprockets (Strong type)

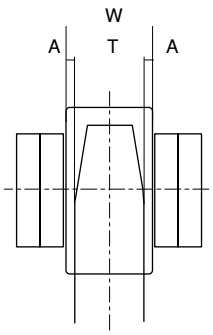

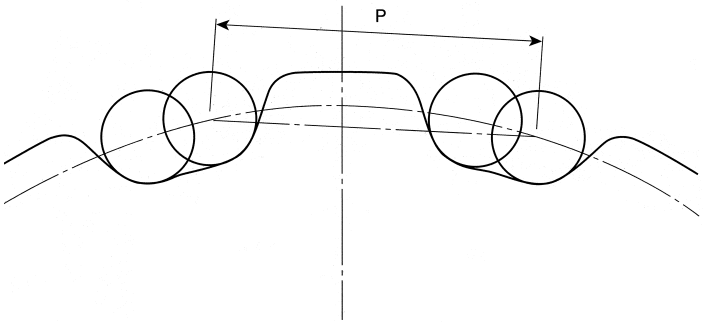

Chain No.		Pitch	W	Drive		Driven	
				T	A	T	A
DK 35H200M	**DK 35Z200M**	200	51.8	45	3.4	40	5.9
DK 35H250M	**DK 35Z250M**	250		(42)	(4.9)	(39)	(6.4)
DK 50H200M	**DK 50Z200M**	200					
DK 50H225M	**DK 50Z225M**	225	57.6	50	3.8	45	6.3
DK 50H250M	**DK 50Z250M**	250		(47)	(5.3)	(43)	(7.3)
DK 50H300M	**DK 50Z300M**	300					
DK 75H200M	**DK 75Z200M**	200					
DK 75H250M	**DK 75Z250M**	250	67.4	55	6.2	50	8.7
DK 75H300M	**DK 75Z300M**	300		(56)	(5.7)	(50)	(8.7)
DK 75H350M	**DK 75Z350M**	350					
DK100H250M	**DK100Z250M**	250	75	—	—	55	10
DK100H300M	**DK100Z300M**	300		(65)	(5)	(57)	(9)
DK100H350M	**DK100Z350M**	350					
DK120H250M	**DK120Z250M**	250					
DK120H300M	**DK120Z300M**	300	82.5	—	—	—	—
DK120H350M	**DK120Z350M**	350		(72)	(5.25)	(63)	(9.75)
DK120H400M	**DK120Z400M**	400					
DK140H300M	**DK140Z300M**	300	85	—	—	—	—
DK140H350M	**DK140Z350M**	350		(74)	(5.5)	(64)	(10.5)
DK140H400M	**DK140Z400M**	400					
DK160H300M	**DK160Z300M**	300	92.5	—	—	—	—
DK160H350M	**DK160Z350M**	350		(82)	(5.25)	(70)	(11.25)
DK160H400M	**DK160Z400M**	400					
DK200H350M	**DK200Z350M**	350	95	—	—	—	—
DK200H400M	**DK200Z400M**	400		(84)	(5.5)	(72)	(11.5)
DK200H450M	**DK200Z450M**	450					
DK250H350M	**DK250Z350M**	350	100	—	—	—	—
DK250H400M	**DK250Z400M**	400		(90)	(5)	(76)	(12)
DK250H500M	**DK250Z500M**	500					

( ) Outer dimension : Welded sheet steel type
( ) Inner dimension : Cast steel type

Tooth Width of Conveyor Chain Sprockets (High-speed BE-type)

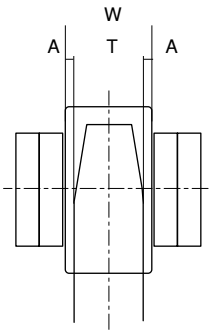

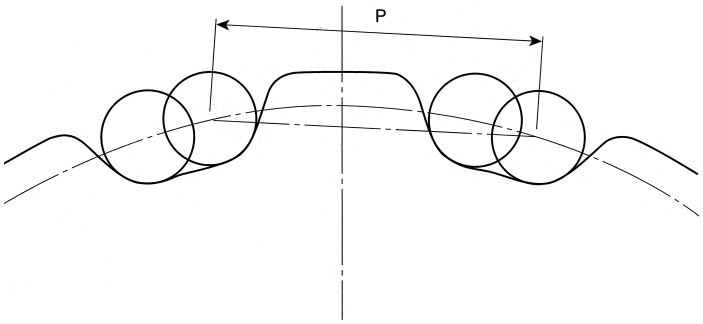

Chain No.	Pitch	W	Drive		Driven	
			T	A	T	A
DK19076M	76.2	36.5	28 (29)	4.25 (3.75)	28 (29)	4.25 (3.75)
DK28076M	76.2	36.5	28 (29)	4.25 (3.75)	28 (29)	4.25 (3.75)
DK23100M	100	51.8	40 (42)	5.9 (4.9)	40 (39)	5.9 (6.4)
DK32100M	100	57.6	40 (42)	8.8 (7.8)	40 (39)	8.8 (9.3)
DK35Z100M	100	51.8	40 (42)	5.9 (4.9)	40 (39)	5.9 (6.4)
DK50Z100M **DK50Z125M** **DK50Z150M**	100 125 150	57.6	45 (47)	6.3 (5.3)	45 (43)	6.3 (7.3)
DK75Z100M **DK75Z125M** **DK75Z150M** **DK75Z175M**	100 125 150 175	67.4	55 (56)	6.2 (5.7)	50 (50)	8.7 (8.7)
DK100Z125M **DK100Z150M** **DK100Z175M**	125 150 175	75	— (65)	— (5)	55 (57)	10 (9)
DK120Z125M **DK120Z150M** **DK120Z175M**	125 150 175	82.5	— (72)	— (5.25)	63 (63)	9.75 (9.75)
DK140Z150M **DK140Z175M**	150 175	85	— (74)	— (5.5)	64 (64)	10.5 (10.5)
DK160Z175M	175	92.5	— (82)	— (5.25)	70 (70)	11.25 (11.25)
DK200Z175M	175	95	— (84)	— (5.5)	— (72)	— (11.5)

( ) Outer dimension : Welded sheet steel type
( ) Inner dimension : Cast steel type

Outer Diameter of DK Conveyor Chain Sprockets: Do (Welded sheet steel type) [1]

Pitch P	Chain No.	Roller dia. d	Outer dia. (Do)									
			6	7	8	9	10	11	12	13	14	15
66.27	DK08066 S.M	22.2	155	175	195	216	237	257	278	299	320	341
75	DK03075 R.F	30	180	203	226	249	273	296	320	343	367	391
	S	15.9	166	189	212	235	259	282	306	329	353	377
	DK07075 R.F	40	182	205	228	251	275	298	322	345	369	393
	S	22.2	172	195	218	241	265	288	312	335	359	383
100	DK03100 R.F	30	230	260	291	322	354	385	416	448	479	511
	S	15.9	216	246	277	308	340	371	402	434	465	497
	DK07100 R.F	40	232	262	293	324	356	387	418	450	481	513
	S	22.2	222	253	284	315	346	377	401	440	472	503
	DK09100 R.F	45	236	266	297	328	360	391	422	454	485	517
	S.M	26.5	227	257	288	319	350	382	413	444	476	507
	DK11100 R.F	50	240	270	301	332	364	395	426	458	489	521
	S.M	28.8	229	259	290	321	352	384	415	446	478	510
101.6	DK05101 R	38.1	233	264	296	327	359	391	423	455	487	519
	S	20.1	223	254	286	317	349	381	413	445	477	509
	DK08101 R.F	44.5	239	270	301	333	364	396	428	460	492	524
	S.M	22.2	225	256	288	319	351	383	415	447	479	511
	DK09101 R	38.1	233	264	296	327	359	391	423	455	487	519
	S.M	26.5	230	261	292	324	355	387	419	451	483	515
	DK13101 R	44.5	239	270	301	333	364	396	428	460	492	524
	S.M	31.8	235	266	297	329	361	392	424	456	488	521
125	DK03125 R.F	30	280	318	357	395	435	474	513	552	592	631
	S	15.9	266	304	343	381	420	460	499	538	578	617
	DK07125 R.F	40	282	320	359	397	437	476	515	554	594	633
	S	22.2	272	310	349	388	427	466	505	545	584	623
	DK09125 R.F	45	286	324	363	401	441	480	519	558	598	637
	S.M	26.5	276	315	353	392	431	470	510	549	588	628
	DK11125 R.F	50	290	328	367	405	445	484	523	562	602	641
	S.M	28.8	279	317	355	394	433	473	512	551	591	630
150	DK03150R.F	30	330	376	422	469	515	562	610	657	704	751
	S	15.9	316	362	408	454	501	548	595	643	690	737
	DK07150R.F	40	332	378	424	471	517	564	612	659	706	753
	S	22.2	322	368	414	461	508	555	602	649	696	744
	DK09150 R.F	45	336	382	428	475	521	568	616	663	710	757
	S.M	26.5	327	372	418	465	512	559	606	653	701	748
	DK11150 R.F	50	340	386	432	479	525	572	620	667	714	761
	S.M	28.8	329	375	421	467	514	561	608	656	703	750
	DK13150 R.F	60	348	394	440	487	533	580	628	675	722	769
	S.M	31.8	332	378	424	470	517	564	612	659	706	753
152.4	DK11152 R.F	50.8	345	392	439	486	534	582	630	677	726	774
	S.M	25.8	331	377	424	471	519	567	615	663	711	759
	DK19152 R.F	57.2	351	397	444	491	539	587	635	683	731	779
	S.M	34.9	340	386	433	480	528	576	624	672	720	768
	DK25152 R.F	69.9	361	407	454	502	549	597	645	693	741	789
	S.M	40.1	345	391	438	486	533	581	629	677	725	773
200	DK11200 R.F	50	440	501	562	625	687	750	813	876	939	1,002
	S.M	28.8	429	490	551	614	676	739	802	865	928	991
	DK13200 R.F	60	448	509	571	633	695	758	821	884	947	1,010
	S.M	31.8	432	493	555	617	679	742	805	868	931	994
	DK19200 R.F	65	452	513	575	637	699	762	825	888	951	1,014
	S.M	34.9	435	496	558	620	682	745	808	871	934	997

Outer Diameter of DK Conveyor Chain Sprockets: Do (Welded sheet steel type) [2]

Pitch P	Chain No.	Roller dia. d	Outer dia. (Do)									
			6	7	8	9	10	11	12	13	14	15
200	**DK25200 R.F**	80	464	525	587	649	711	774	837	900	963	1,026
	S.M	40.1	440	501	563	625	687	750	813	876	939	1,002
	DK32200 R.F	100	480	541	603	665	727	790	853	916	979	1,042
	S.M	44.5	445	505	567	629	692	754	817	880	943	1,006
	DK35Z200M DK35H200M	44.5					686	747				
	DK50Z200M DK50H200M	50.8					690	754				
	DK75Z200M DK75H200M	63.5					701	764				
225	**DK50Z225M DK50H225M**	50.8					771	841				
250	**DK19250 R.F**	65	552	628	705	783	861	939	1,018	1,097	1,175	1,254
	S.M	34.9	535	611	688	766	844	922	1,001	1,080	1,158	1,237
	DK25250 R.F	80	564	640	717	795	873	951	1,030	1,109	1,187	1,266
	S.M	40.1	540	616	693	771	849	928	1,006	1,085	1,164	1,243
	DK32250 R.F	100	580	656	733	811	889	967	1,046	1,125	1,203	1,282
	S.M	44.5	545	621	698	775	854	932	1,010	1,089	1,168	1,247
	DK50250 R.F	125	600	676	753	831	909	987	1,066	1,145	1,223	1,302
	S.M	50.8	551	627	704	782	860	938	1,017	1,095	1,174	1,253
	DK35Z250M DK35H250M	44.5					847	925				
	DK50Z250M DK50H250M	50.8					852	930				
	DK75Z250M DK75H250M	63.5					863	941				
	DK100Z250M DK100H250M	70					868	947				
	DK120Z250M DK120H250M	75					872	950				
300	**DK19300 R.F**	65	652	743	836	929	1,023	1,117	1,211	1,306	1,400	1,495
	S.M	34.9	635	726	819	912	1,006	1,100	1,194	1,288	1,383	1,478
	DK25300 R.F	80	664	755	848	941	1,035	1,129	1,223	1,318	1,412	1,507
	S.M	40.1	640	732	824	917	1,011	1,105	1,199	1,294	1,388	1,483
	DK32300 R.F	100	680	771	864	957	1,051	1,145	1,239	1,334	1,428	1,523
	S.M	44.5	645	736	828	922	1,015	1,109	1,204	1,298	1,393	1,487
	DK50300 R.F	125	700	791	884	977	1,071	1,165	1,259	1,354	1,448	1,543
	S.M	50.8	651	742	835	928	1,022	1,116	1,210	1,304	1,399	1,494
	DK65300 R.F	140	712	803	896	989	1,083	1,177	1,271	1,366	1,460	1,555
	S.M	57.1	657	749	841	934	1,028	1,122	1,216	1,311	1,405	1,500
	DK50Z300M DK50H300M	50.8					1,013	1,108	1,202			
	DK75Z300M DK75H300M	63.5					1,024	1,119	1,213			
	DK100Z300M DK100H300M	70					1,030	1,124	1,219			
	DK120Z300M DK120H300M	75					1,034	1,128	1,222			
	DK140Z300M DK140H300M	82					1,041	1,135	1,229			
	DK160Z300M DK160H300M	86					1,044	1,138	1,232			

Outer Diameter of DK Conveyor Chain Sprockets: Do (Welded sheet steel type) [3]

Pitch P	Chain No.	Roller dia. d	Outer dia. (Do)									
			6	7	8	9	10	11	12	13	14	15
350	**DK75Z350M**	63.5					1,186	1,296	1,406			
	DK75H350M											
	DK100Z350M	70					1,192	1,301	1,411			
	DK100H350M											
	DK120Z350M	75					1,196	1,306	1,416			
	DK120H350M											
	DK140Z350M	82					1,202	1,312	1,422			
	DK140H350M											
	DK160Z350M	86					1,205	1,315	1,425			
	DK160H350M											
	DK200Z350M	97					1,215	1,324	1,434			
	DK200H350M											
	DK250Z350M	107					1,224	1,333	1,443			
	DK250H350M											
400	**DK120Z400M**	75					1,358	1,484	1,609			
	DK120H400M											
	DK140Z400M	82					1,364	1,490	1,615			
	DK140H400M											
	DK160Z400M	86					1,367	1,493	1,618			
	DK160H400M											
	DK200Z400M	97					1,376	1,502	1,628			
	DK200H400M											
	DK250Z400M	107					1,385	1,510	1,636			
	DK250H400M											
450	**DK32450 R.F**	100	980	1,117	1,256	1,396	1,536	1,677	1,819	1,960	2,102	2,244
	S.M	44.5	945	1,082	1,220	1,360	1,501	1,642	1,783	1,925	2,067	2,209
	DK50450 R.F	125	1,000	1,137	1,276	1,416	1,556	1,697	1,839	1,980	2,122	2,264
	S.M	50.8	951	1,088	1,227	1,367	1,507	1,648	1,789	1,931	2,073	2,215
	DK65450 R.F	140	1,012	1,149	1,288	1,428	1,568	1,709	1,851	1,992	2,134	2,276
	S.M	57.1	957	1,094	1,233	1,373	1,513	1,654	1,796	1,937	2,079	2,221
	DK200Z450M	97					1,539	1,680	1,821			
	DK200H450M											
500	**DK250Z500M**	107					1,709	1,865	2,023			
	DK250H500M											
600	**DK50600 R.F**	125	1,300	1,483	1,668	1,854	2,042	2,230	2,418	2,607	2,796	2,986
	S.M	50.8	1,251	1,434	1,619	1,805	1,992	2,180	2,369	2,558	2,747	2,937

Outer Diameter of DK Conveyor Chain Sprockets: Do (Cast steel type) [1]

Pitch P	Chain No.	Roller dia. d	Outer dia. (Do)									
			6	7	8	9	10	11	12	13	14	15
66.27	DK08066 S.M	22.2	155	175	195	216	237	257	278	299	320	341
75	DK03075 R.F	30	180	203	226	249	273	296	320	343	367	391
	S	15.9	166	189	212	235	259	282	306	329	353	377
	DK07075 R.F	40	182	205	228	251	275	298	322	345	369	393
	S	22.2	172	195	218	241	265	288	312	335	359	383
100	DK03100 R.F	30	230	260	291	322	354	385	416	448	479	511
	S	15.9	216	246	277	308	340	371	402	434	465	497
	DK07100 R.F	40	232	262	293	324	356	387	418	450	481	513
	S	22.2	222	253	284	315	346	377	401	440	472	503
	DK09100 R.F	45	236	266	297	328	360	391	422	454	485	517
	S.M	26.5	227	257	288	319	350	382	413	444	476	507
	DK11100 R.F	50	240	270	301	332	364	395	426	458	489	521
	S.M	28.8	229	259	290	321	352	384	415	446	478	510
101.6	DK05101 R	38.1	233	264	296	327	359	391	423	455	487	519
	S	20.1	223	254	286	317	349	381	413	445	477	509
	DK08101 R.F	44.5	239	270	301	333	364	396	428	460	492	524
	S.M	22.2	225	256	288	319	351	383	415	447	479	511
	DK09101 R	38.1	233	264	296	327	359	391	423	455	487	519
	S.M	26.5	230	261	292	324	355	387	419	451	483	515
	DK13101 R	44.5	239	270	301	333	364	396	428	460	492	524
	S.M	31.8	235	266	297	329	361	392	424	456	488	521
125	DK03125 R.F	30	280	318	357	395	435	474	513	552	592	631
	S	15.9	266	304	343	381	420	460	499	538	578	617
	DK07125 R.F	40	282	320	359	397	437	476	515	554	594	633
	S	22.2	272	310	349	388	427	466	505	545	584	623
	DK09125 R.F	45	286	324	363	401	441	480	519	558	598	637
	S.M	26.5	276	315	353	392	431	470	510	549	588	628
	DK11125 R.F	50	290	328	367	405	445	484	523	562	602	641
	S.M	28.8	279	317	355	394	433	472	512	551	591	630
150	DK03150 R.F	30	330	376	422	469	515	562	610	657	704	751
	S	15.9	316	362	408	454	501	548	595	643	690	737
	DK07150 R.F	40	332	378	424	471	517	564	612	659	706	753
	S	22.2	322	368	414	461	508	555	602	649	696	744
	DK09150 R.F	45	336	382	428	475	521	568	616	663	710	757
	S.M	26.5	327	372	418	465	512	559	606	653	701	748
	DK11150 R.F	50	340	386	432	479	525	572	620	667	714	761
	S.M	28.8	329	375	421	467	514	561	608	656	703	750
	DK13150 R.F	60	348	394	440	487	533	580	628	675	722	769
	S.M	31.8	332	378	424	470	517	564	612	659	706	753
152.4	DK11152 R.F	50.8	345	392	439	486	534	582	630	677	726	774
	S.M	25.8	331	377	424	471	519	567	615	663	711	759
	DK19152 R.F	57.2	351	397	444	491	539	587	635	683	731	779
	S.M	34.9	340	386	433	480	528	576	624	672	720	768
	DK25152 R.F	69.9	361	407	454	502	549	597	645	693	741	789
	S.M	40.1	345	391	438	486	533	581	629	677	725	773
200	DK11200 R.F	50	440	501	562	625	687	750	813	876	939	1,002
	S.M	28.8	429	490	551	614	676	739	802	865	928	991
	DK13200 R.F	60	448	509	571	633	695	758	821	884	947	1,010
	S.M	31.8	432	493	555	617	679	742	805	868	931	994
	DK19200 R.F	65	452	513	575	637	699	762	825	888	951	1,014
	S.M	34.9	435	496	558	620	682	745	808	871	934	997

Outer Diameter of DK Conveyor Chain Sprockets: Do (Cast steel type) [2]

Pitch P	Chain No.	Roller dia. d	Outer dia. (Do)									
			6	7	8	9	10	11	12	13	14	15
200	DK25200 R.F	80	464	525	587	649	711	774	837	900	963	1,026
	S.M	40.1	440	501	563	625	687	750	813	876	939	1,002
	DK32200 R.F	100	480	541	603	665	727	790	853	916	979	1,042
	S.M	44.5	445	505	567	629	692	754	817	880	943	1,006
	DK35Z200M DK35H200M	44.5					685	748				
	DK50Z200M DK50H200M	50.8					691	753				
	DK75Z200M DK75H200M	63.5					701	764				
225	DK50Z225M DK50H225M	50.8					771	841				
250	DK19250 R.F	65	552	628	705	783	861	939	1,018	1,097	1,175	1,254
	S.M	34.9	535	611	688	766	844	922	1,001	1,080	1,158	1,237
	DK25250 R.F	80	564	640	717	795	873	951	1,030	1,109	1,187	1,266
	S.M	40.1	540	616	693	771	849	927	1,006	1,085	1,164	1,243
	DK32250 R.F	100	580	656	733	811	889	967	1,046	1,125	1,203	1,282
	S.M	44.5	545	621	698	775	854	932	1,010	1,089	1,168	1,247
	DK50250 R.F	125	600	676	753	831	909	987	1,066	1,145	1,223	1,302
	S.M	50.8	551	627	704	782	860	938	1,017	1,095	1,174	1,253
	DK35Z250M DK35H250M	44.5					847	925				
	DK50Z250M DK50H250M	50.8					852	930				
	DK75Z250M DK75H250M	63.5					863	941				
	DK100Z250M DK100H250M	70					868	947				
	DK120Z250M DK120H250M	75					872	950				
300	DK19300 R.F	65	652	743	836	929	1,023	1,117	1,211	1,306	1,400	1,495
	S.M	34.9	635	726	819	912	1,006	1,100	1,194	1,288	1,383	1,478
	DK25300 R.F	80	664	755	848	941	1,035	1,129	1,223	1,318	1,412	1,507
	S.M	40.1	640	732	824	917	1,011	1,105	1,199	1,294	1,388	1,483
	DK32300 R.F	100	680	771	864	957	1,051	1,145	1,239	1,334	1,428	1,523
	S.M	44.5	645	736	828	922	1,015	1,109	1,204	1,298	1,393	1,487
	DK50300 R.F	125	700	791	884	977	1,071	1,165	1,259	1,354	1,448	1,543
	S.M	50.8	651	742	835	928	1,022	1,116	1,210	1,304	1,399	1,494
	DK65300 R.F	140	712	803	896	989	1,083	1,177	1,271	1,366	1,460	1,555
	S.M	57.1	657	749	841	934	1,028	1,122	1,216	1,311	1,405	1,500
	DK50Z300M DK50H300M	50.8					1,013	1,108	1,202			
	DK75Z300M DK75H300M	63.5					1,024	1,118	1,213			
	DK100Z300M DK100H300M	70					1,030	1,124	1,219			
	DK120Z300M DK120H300M	75					1,034	1,128	1,222			
	DK140Z300M DK140H300M	82					1,041	1,135	1,229			
	DK160Z300M DK160H300M	86					1,044	1,138	1,232			

Outer Diameter of DK Conveyor Chain Sprockets: Do (Cast steel type) [3]

Pitch P	Chain No.	Roller dia. d	Outer dia. (Do)									
			6	7	8	9	10	11	12	13	14	15
350	**DK75Z350M**	63.5					1,186	1,296	1,406			
	DK75H350M											
	DK100Z350M	70					1,192	1,301	1,411			
	DK100H350M											
	DK120Z350M	75					1,196	1,306	1,416			
	DK120H350M											
	DK140Z350M	82					1,202	1,312	1,422			
	DK140H350M											
	DK160Z350M	86					1,205	1,315	1,425			
	DK160H350M											
	DK200Z350M	97					1,215	1,324	1,434			
	DK200H350M											
	DK250Z350M	107					1,224	1,333	1,443			
	DK250H350M											
400	**DK120Z400M**	75					1,358	1,484	1,609			
	DK120H400M											
	DK140Z400M	82					1,364	1,490	1,615			
	DK140H400M											
	DK160Z400M	86					1,367	1,493	1,618			
	DK160H400M											
	DK200Z400M	97					1,376	1,502	1,628			
	DK200H400M											
	DK250Z400M	107					1,385	1,510	1,636			
	DK250H400M											
450	**DK32450 R.F**	100	980	1,117	1,256	1,396	1,536	1,677	1,819	1,960	2,102	2,244
	S.M	44.5	945	1,082	1,220	1,360	1,501	1,642	1,783	1,925	2,067	2,209
	DK50450R.F	125	1,000	1,137	1,276	1,416	1,556	1,697	1,839	1,980	2,122	2,264
	S.M	50.8	951	1,088	1,227	1,367	1,507	1,648	1,789	1,931	2,073	2,215
	DK65450R.F	140	1,012	1,149	1,288	1,428	1,568	1,709	1,851	1,992	2,134	2,276
	S.M	57.1	957	1,094	1,233	1,373	1,513	1,654	1,796	1,937	2,079	2,221
	DK200Z450M	97					1,539	1,680	1,821			
	DK200H450M											
500	**DK250Z500M**	107					1,709	1,865	2,023			
	DK250H500M											
600	**DK50600 R.F**	125	1,300	1,483	1,668	1,854	2,042	2,230	2,418	2,607	2,796	2,986
	S.M	50.8	1,251	1,434	1,619	1,805	1,992	2,180	2,369	2,558	2,747	2,937

Pitch Diameter of Conveyor Chain Sprockets: Dp

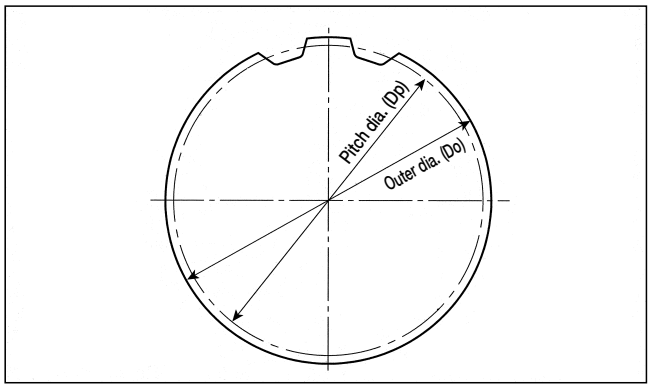

Pitch P	Pitch dia. (Dp)									
	6	7	8	9	10	11	12	13	14	15
66.27	132.5	152.7	173.2	193.8	214.5	235.2	256.0	276.9	297.8	318.7
75	150.0	172.9	196.0	219.3	242.7	266.2	289.8	313.4	337.0	360.7
100	200.0	230.5	261.3	292.4	323.6	354.9	386.4	417.9	449.4	481.0
101.6	203.2	234.2	265.5	297.1	328.8	360.6	392.6	424.5	456.6	488.7
125	250.0	288.1	326.6	365.5	404.5	443.7	483.0	522.3	561.7	601.2
150	300.0	345.7	392.0	438.6	485.4	532.4	579.6	626.8	674.1	721.5
152.4	304.8	351.2	398.2	445.6	493.2	540.9	588.8	636.8	684.9	733.0
200	400.0	461.0	522.6	584.8	647.2	709.9	772.7	835.7	898.8	961.9
225	450.0	518.6	588.0	657.9	728.1	798.6	869.3	940.2	1,011.1	1,082.2
250	500.0	576.2	653.3	731.0	809.0	887.4	965.9	1,044.6	1,123.5	1,202.4
300	600.0	691.4	783.9	877.1	970.8	1,064.8	1,159.1	1,253.6	1,348.2	1,442.9
350	700.0	806.7	914.6	1,023.3	1,132.6	1,242.3	1,352.3	1,462.5	1,572.9	1,683.4
400	800.0	921.9	1,045.3	1,169.5	1,294.4	1,419.8	1,545.5	1,671.4	1,797.6	1,923.9
450	900.0	1,037.1	1,175.9	1,315.7	1,456.2	1,597.3	1,738.7	1,880.4	2,022.3	2,164.4
500	1,000.0	1,152.4	1,306.6	1,461.9	1,618.0	1,774.7	1,931.9	2,089.3	2,247.0	2,404.9
600	1,200.0	1,382.9	1,567.9	1,754.3	1,941.6	2,129.7	2,318.2	2,507.1	2,696.4	2,885.8

Conveyor Chain Sprocket for NSE-type Bucket Elevator No. of Teeth: 24

Dimensional Drawing

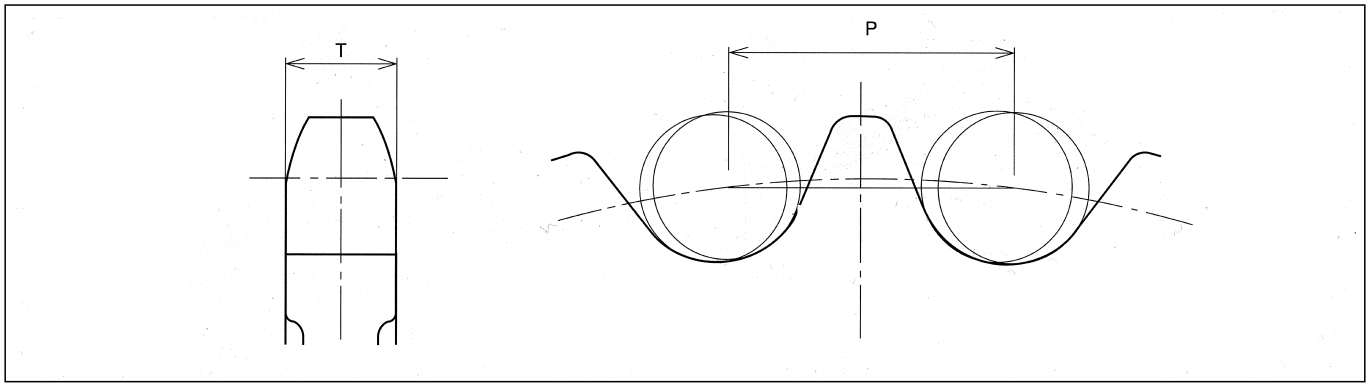

Pitch Diameter and Outer Diameter

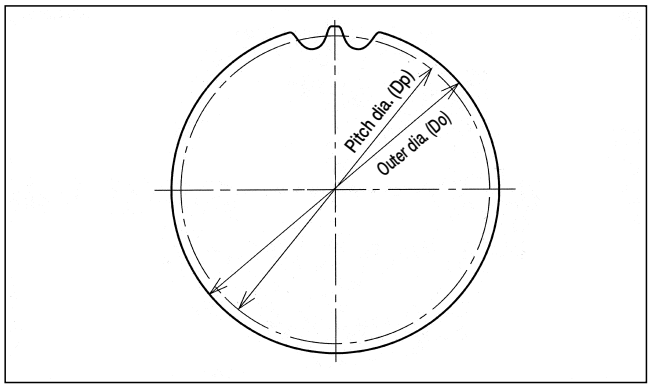



Dimensions of NSE-type Conveyor Chain Sprockets

Welded sheet steel type No. of teeth : 24

Unit (mm)

Pitch **P**	Chain No.	Roller dia. **d**	Pitch dia. **Dp**	Outer dia. **Do**	Tooth width **T**	
					Drive	Driven
76.2	**DK 19076M** **DK 28076M**	38.1	583.8	616	28	28
100	**DK 23100M** **DK 35Z100M**	44.5	766.1	804	40	40
	DK 32100M **DK 50Z100M**	50.8		810	45	45
125	**DK 50Z125M**	50.8	957.7	1,001	45	45
	DK 75Z125M	63.5		1,010	55	50
	DK100Z125M	70		1,014	—	55
	DK120Z125M	75		1,020	—	—
150	**DK 75Z150M**	63.5	1,149.2	1,202	55	50
	DK100Z150M	70		1,209	—	55
	DK120Z150M	75		1,212	72	63
	DK140Z150M	82		1,218	74	64
175	**DK 75Z175M**	63.5	1,340.7	1,395	55	50
	DK100Z175M	70		1,400	—	55
	DK120Z175M	75		1,404	—	—
	DK140Z175M	82		1,410	—	—
	DK160Z175M	86		1,412	—	—
	DK200Z175M	97		1,420	—	—

Cast steel type No. of teeth : 24

Unit (mm)

Pitch **P**	Chain No.	Roller dia. **d**	Pitch dia. **Dp**	Outer dia. **Do**	Tooth width **T**	
					Drive	Driven
76.2	**DK 19076M** **DK 28076M**	38.1	583.8	616	29	29
100	**DK 23100M** **DK 35Z100M**	44.5	766.1	804	42	39
	DK 32100M **DK 50Z100M**	50.8		810	47	43
125	**DK 50Z125M**	50.8	957.7	1,001	47	43
	DK 75Z125M	63.5		1,010	56	50
	DK100Z125M	70		1,014	65	57
	DK120Z125M	75		1,020	72	63
150	**DK 75Z150M**	63.5	1,149.2	1,202	56	50
	DK100Z150M	70		1,209	65	57
	DK120Z150M	75		1,212	72	63
	DK140Z150M	82		1,218	74	64
175	**DK 75Z175M**	63.5	1,340.7	1,395	56	50
	DK100Z175M	70		1,400	65	57
	DK120Z175M	75		1,404	72	63
	DK140Z175M	82		1,410	74	64
	DK160Z175M	86		1,412	82	70
	DK200Z175M	97		1,420	84	72

Shaft diameter and hub dimensions

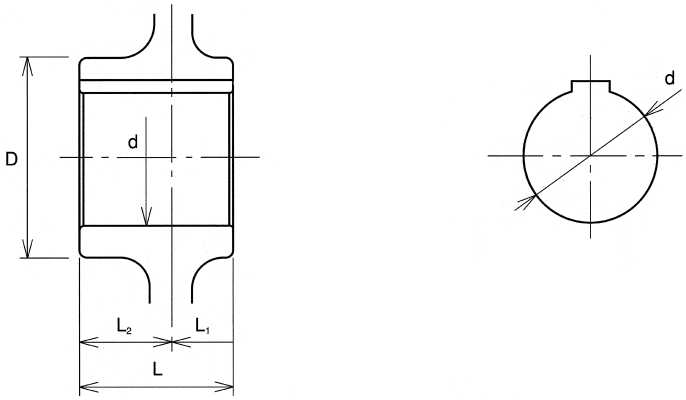

Standard hub dimensions

Unit (mm)

Shaft dia. range d		Hub dia. D	Hub width L	L1	L2
	50≥	85	75	30	45
50<	65≥	110	75	30	45
65	85	140	100	40	60
85	110	180	130	50	80
110	145	225	170	70	100
145	180	270	200	90	110
180	225	340	235	110	125
225	260	400	270	120	150
260	315	480	300	130	170

Key slot dimensions

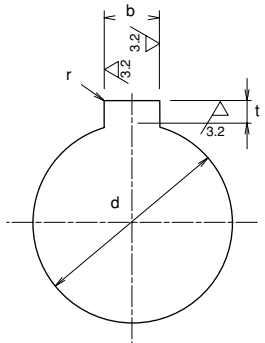

Parallel key slot dimensions (Old JIS)

Unit (mm)

Nominal dimension	Shaft dia. range d <	d ≥	Key slot b	t	r
12× 8	40	50	12	3.5	0.6
15×10	50	60	15	5	
18×12	60	70	18	6	1.0
20×13	70	80	20	6	
24×16	80	95	24	8	
28×18	95	110	28	9	
32×20	110	125	32	10	1.6
35×22	125	140	35	11	
38×24	140	160	38	12	
42×26	160	180	42	13	
45×28	180	200	45	14	
50×31.5	200	224	50	15.5	
56×35.5	224	250	56	17.5	
63×40	250	280	63	20	2.5
71×45	280	315	71	22.5	
80×50	315	355	80	25	

Parallel key slot dimensions (New JIS)

Unit (mm)

Nominal dimension	Shaft dia. range d <	d ≥	Key slot b	t	r
12× 8	38	44	12	3.3	0.4
14× 9	44	50	14	3.8	
16×10	50	58	16	4.3	
18×11	58	65	18	4.4	
20×12	65	75	20	4.9	0.6
22×14	75	85	22	5.4	
25×14	85	95	25	5.4	
28×16	95	110	28	6.4	
32×18	110	130	32	7.4	
36×20	130	150	36	8.4	1.0
40×22	150	170	40	9.4	
45×25	170	200	45	10.4	
50×28	200	230	50	11.4	
56×32	230	260	56	12.4	1.6
63×32	260	290	63	12.4	
70×36	290	330	70	14.4	
80×40	330	380	80	15.4	2.5

DK Conveyor Chain Sprocket

DK Detachable Teeth Sprockets PAT.

Any damage on the teeth surfaces of a sprocket diminishes the life of the conveyor chain.
With conventional sprockets, considerably worn sprocket teeth were repaired by teeth padding or the entire sprocket was replaced. In either case, repair was costly and with teeth padding, accuracy was impaired. We developed new sprockets with detachable teeth for independent replacement. This sprocket is highly rated by our customers for the dramatic savings in cost and time.

Structure

The teeth can be replaced by two methods: individual tooth replacement or sectional teeth replacement.
The bolts and nuts used for mounting the teeth on to the sprocket are spot-welded to prevent loosening.
The respective structures are illustrated on the right.



The above photo and the top right illustration show a sprocket for individual tooth replacement. Since the joint face between the replaced teeth and the sprocket is formed in a unique arc, the bonding accuracy is high and the sprocket strength is enhanced. Furthermore, since the load acting on the mounting bolts is decreased, there is less possibility of loosening. This sprocket construction is patented.

There are two types of hubs: cast steel and welded sheet steel hubs. Cast steel hubs are used for large sprockets receiving heavy loads and welded sheet steel hubs for other applications.

Sprocket for individual tooth replacement

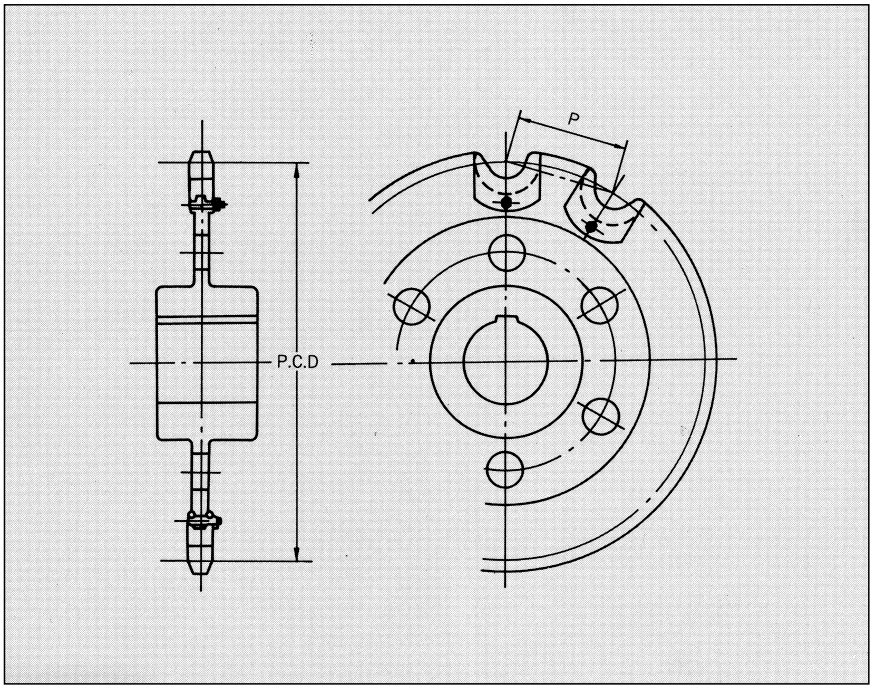

Sprocket for sectional teeth replacement (example: division by four sections)

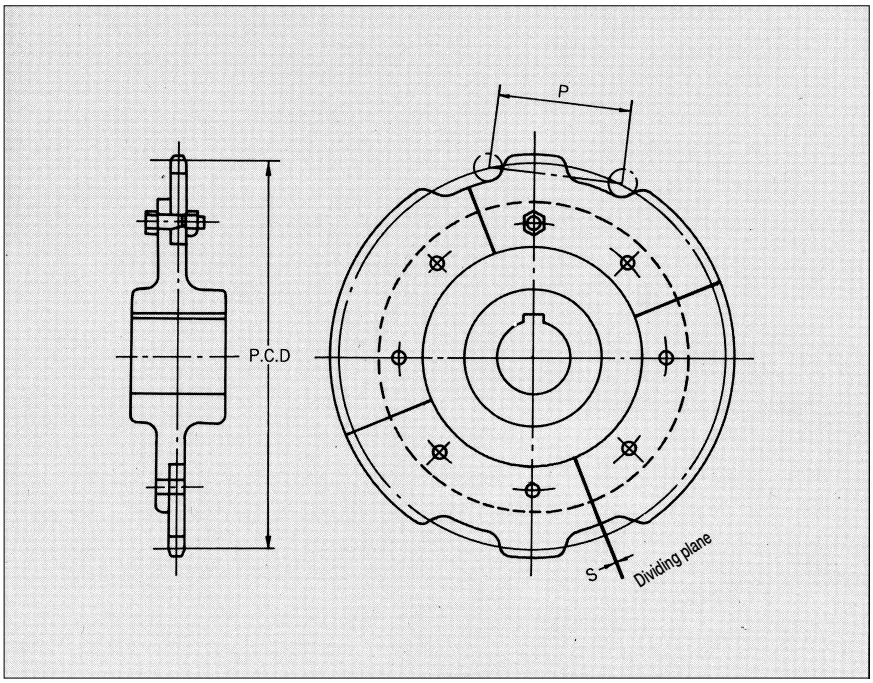

Note: Ask us for the delivery time.

Chain Selection

To fully exhibit its superb features, a chain conveyor must match the application. Select the most suitable chain by accurately identifying the characteristics of the chain conveyor system and service conditions (types and properties of the load, conveyance capacity, speed, distance, service environment, etc.).
Refer to the selection flowchart below, and the details on each step of the selection procedure.

Selection Flowchart

Though comprehensive knowledge and experience are required for selecting chains, a general selection procedure is described here to assist you in selecting the optimal conveyor chain.

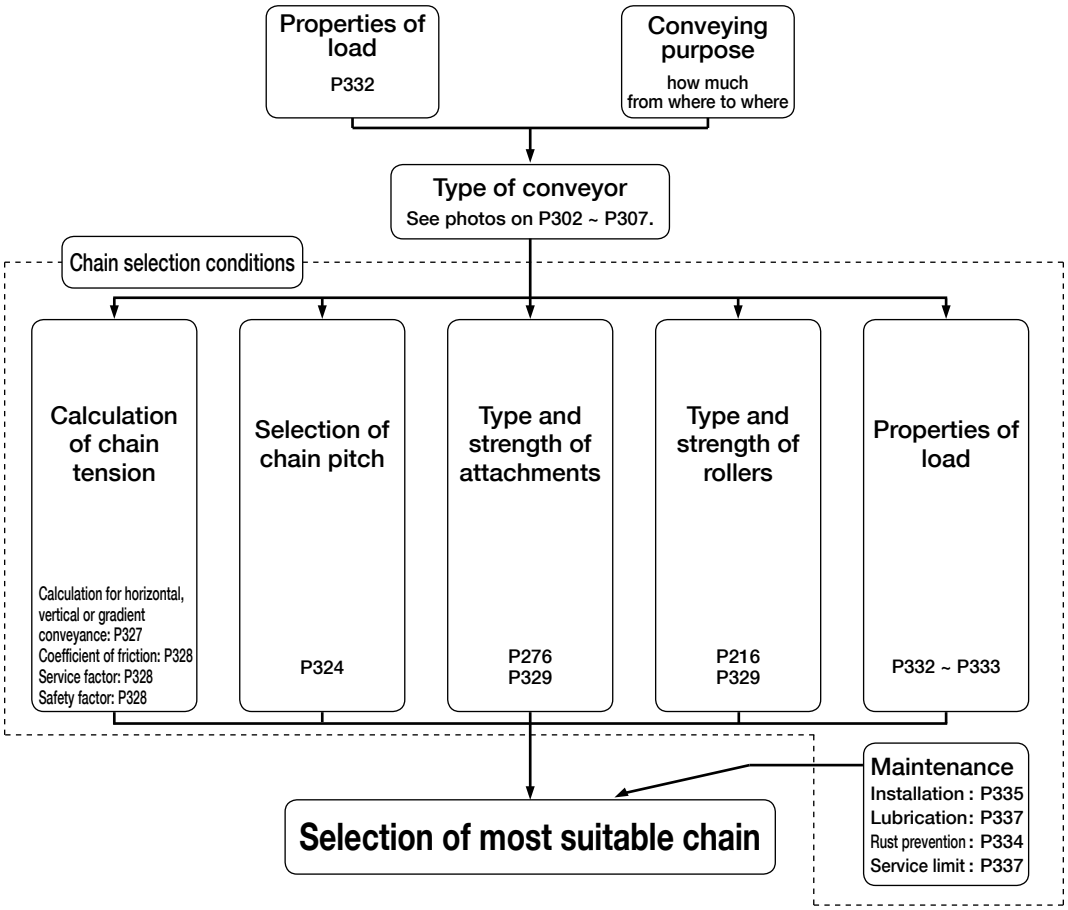

Selection of Chain Pitch

In general, a chain with a smaller pitch travels more smoothly and lasts longer as it receives less shock. However, its larger number of links results in an increase of the entire weight, diminishing cost efficiency.
Conversely, a chain with a larger pitch receives more shock which shortens chain life and causes noise.
The chain pitch is decided by considering the operation speed and the sprocket teeth number.
In general, use the chain at or lower than the allowable chain speed shown in the graph on the right.

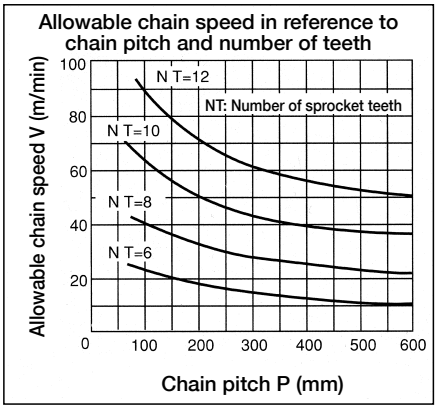

For Use at High-temperature

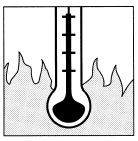

Chains strength is diminished by high-temperature atmosphere, direct conveying of high-temperature loads, or radiated heat, etc. The service limit at high-temperature depends not on the temperature of the service environment but the temperature and material of the chain.
Following conditions may occur when chains are used at high-temperature:

1) High temperature brittleness and fracture by lowered hardness of heat treated material
2) Brittleness caused by carbide precipitation
3) Abnormal wear by scale
4) Fatigue fracture caused by repeated thermal shock (cooling and expansion)
5) Abnormal wear due to an increase in the coefficient of friction
6) Creep fracture
7) Fracture due to thermal fatigue of welded area
8) Effects caused by thermal expansion
   - Stiff links and rotation failure due to decreased clearance
   - Fatigue fracture due to lowered fitting force
9) Lubrication failure and stiff links due to deterioration and carbonization of lubricating oil
   Grease excellent in heat resistance include those based on silicon, graphite or molybdenum disulfide.

For use at high-temperature, high-temperature resistance bearings and stainless steel bearings are recommended.

For Use at Low-temperature

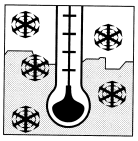

When using conveyor chains at low-temperature such as in a refrigerator or in a cold atmosphere, the following conditions may occur.

1) Low temperature brittleness
In general, a material is embrittled at low-temperature and shock resistance is lowered. This phenomenon is called low-temperature brittleness, and the degree of embrittlement differs from material to material.
The service limit of a conveyor chain depends on its specifications.

Variations in material and heat treatment		Service limit temperature
Standard Wear resistance With stainless steel parts	(J,A) (P,C,D) (D1,D3,D5)	-20°C
Heavy-duty Stainless steel	(K,E) (S4,S5,SH)	-40°C
Stainless steel	(S3)	-100°C

2) Influence of freezing
At low-temperature, bending failure, roller rotation failure, fixing of chain, etc. may be caused by the freezing of penetrated water or deposited frost in the clearance between pins and bushings, bushings and rollers or inner plates and outer plates. These conditions cause an overload to act on the chain and drive, diminishing the life of the chain.
To prevent freezing, in general, it is recommended to fill the clearances with a low-temperature lubricant suitable to the service temperature to prevent water, frost, etc. from penetrating the respective portions of the chain.
For lubrication, a silicon based grease is recommended.

For Use in Dusty Environment

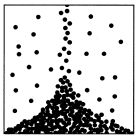

When using chains in an environment of dirt, sand, dust, etc., periodically wash and lubricate the chain. For greasing, use a grease gun to allow the lubricant to sufficiently penetrate into the clearances between pins and bushings, bushings and rollers, and outer plates and inner plates. When using chains in a highly abrasive environment, we recommend the following:

1) Select a conveyor designed to prevent the chains from coming into contact with the abrasive loads, or cover the chain.
2) Select a chain with the largest size possible to reduce the face pressure of bearing portions such as between pins and bushings.
3) Keep the chain speed as low as possible.
4) Make grease holes in the pins and bushings, and lubricate with grease nipples.
   (Consult us when drilling pins and bushings as they are reinforced parts.)

For dusty environments and highly abrasive environments, high wear resistant bearings such as chain, DJ, Diesten and Dimec bearings are available.

For Use in Circumstances Exposed to Water or Sea Water Drops

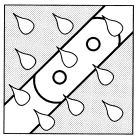

When chains are exposed to rainwater or sea water drops, lowering of strength and brittleness by corrosion, sudden wear, bending failure by rusting and roller rotation failure etc. occur. In such cases, depending on the situation, stainless steel or high guard chains or chains with stainless steel parts are recommended. The high guard chains are highly rated by our customers. For using chains under water, see the following "For In-water Use".

For In-water Use

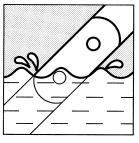

When using chains in water or sea water, brittle fracture and corrosion must be taken into consideration in addition to the adverse conditions stated in the above section. For this purpose, we manufacture Water Treatment Conveyor Chains including Traveling Water Screen Transfer Chain, Rake Chain, Sewage Treatment Chain, BT Bushing Chain for Water Treatment Drive Unit.
Chains with stainless steel parts, with specially coated plates or stainless steel chains are recommended.
Furthermore, as corrosion resistant bearings which can be used in-water, stainless steel, Diesten and Diemec bearings are available.

For Use in Acidic or Alkali Environments

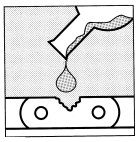

In acidic or alkali environments, stress corrosion, hydrogen embrittlement, intergranular corrosion, etc. are caused in addition to common problems encountered in other corrosive environments. Section "5-4 Corrosion Resistance Against Various Substances" lists the corrosion resistance of chain materials to various substances.
Particularly, components made of 13Cr stainless steel may rust depending on conditions.

＊For use in a corrosive environment, please let us know the name and properties of the articles to be conveyed, service conditions (temperature, load, etc.), materials of parts used around the chain (rails, covers, tanks, etc.) using the "Inquiry Sheet (Conveyor Chain)" on P338.

Lubrication

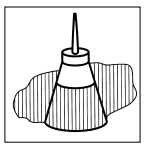

Chain life is extended by periodical lubrication. Lubrication also reduces the required power. However, note that, under some service conditions, lubrication may adversely affect the chain, or be regulated by law, etc.

● Lubricating oils

ISO VG	Temperature
100	-10°C ~ 0°C
150	0°C ~ 40°C

● Lubrication intervals

It is a general rule to lubricate about once a week, but depending on the conditions during operation and the state of lubricating oil, lubricate as needed.
As lubrication methods, coating or drip lubrication is recommended. As for the locations of lubrication, see the following illustration.
For effective lubrication, clean the chain before lubrication. Select a lubrication method suitable for the specific service condition.

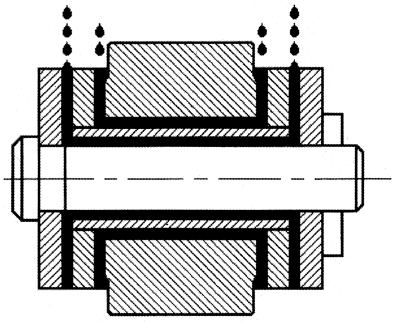

When Lubrication Is Not Possible

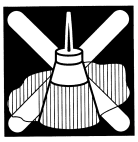

Lubrication is absolutely necessary for extending the life of the chain. However, under some conditions, lubrication may not be practical.
Avoid lubrication in the following cases:

1) The chain is embedded in the loads (granular material, powder, etc.).
2) Granular material and powder deposit on the chain when carried by pan or apron conveyors. Here, lubrication works adversely.
3) The chain temperature becomes high.
4) Conditions in which lubrication is prohibited by regulations or laws.

When the chain cannot be lubricated or is being used to convey food, we recommend using our resin, oilless or stainless steel bearings.

For Use with Food

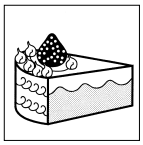

When using chains for driving or conveying within a food processing machine, especially when the food directly contacts the chain, stainless steel is required by food hygiene law.
Stainless steel chains (S3) made of 18-8 stainless steel are recommended. We also manufacture chains with neat appearance that give a clean impression designed particularly for use with food products. Contact us for more information.

Calculation Formula for Horizontal, Vertical and Gradient Conveyance

The maximum static tension acting on the chain can be calculated from the following formula.

Specifications of conveyor — **Unit**

T : Max. tension applied to the chain — kN
Q : Max. conveyance capacity — t/h
S : Conveyance speed — m/min
V : Vertical center distance between sprocket shafts — m
H : Horizontal center distance between sprocket shafts — m
L : Center distance between sprocket shafts — m
M : Weight of traveling parts (weight of chain, slats, buckets, etc.) — kg/m
f1 : Coefficient of friction between chain and guide rail
f2 : Coefficient of friction between conveyed articles and bottom and/or side plates
η : Mechanical transmission efficiency of drive
kW : Required power — kW
g : Gravitational acceleration 9.80665m/S^2
W : Total weight of conveyed articles on the conveyor (maximum value) — kg

Countable object : $W = \dfrac{L\ (m)}{\text{Intervals of loads (m)}} \times$ Weight per unit of loads (kg)

Conveyor layout	Conveyance method	Load type	Formula
Horizontal 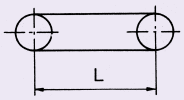	Conveys loads on it (Slat conveyor, apron conveyor, etc.)	Countable object	$T=(W+2.1\times M\times L)\times f_1\times \frac{g}{1{,}000}$ $kW=\frac{T\times S}{52.2\times \eta}$
		Bulk	$T=(16.7\times \frac{Q}{S}+2.1\times M)\times L\times f_1\times \frac{g}{1{,}000}$ $kW=\frac{T\times S}{52.2\times \eta}$
	Conveys by scraping (Continuous flow conveyor, scraper conveyor, etc.)	Bulk	$T=(16.7\times \frac{Q}{S}\times f_2+2.1\times M\times f_1)\times L\times \frac{g}{1{,}000}$ $kW=\frac{T\times S}{52.2\times \eta}$
Vertical 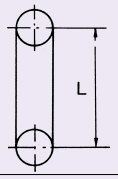	Conveys loads on it (Bucket elevator, tray elevator, etc.)	Countable object	$T=(W+M\times L)\times \frac{g}{1{,}000}$ $kW=\frac{W\times L\times S}{52.2\times \eta}$
		Bulk	$T=(16.7\times \frac{Q}{S}+M)\times (L+2)\times \frac{g}{1{,}000}$ $kW=\frac{T\times S}{52.2\times \eta}$
Gradient 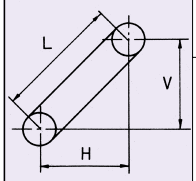	Conveys loads on it (Slat conveyor, apron conveyor, etc.)	Countable object	$T=(W+M\times L)\times \frac{H\times f_1+V}{L}\times \frac{g}{1{,}000}+1.1\times M\times (H\times f_1-V)\times \frac{g}{1{,}000}$ $kW=\frac{S}{52.2\times \eta}\times\{T-M\times (V-H\times f_1)\times \frac{g}{1{,}000}\}$
		Bulk	$T=(16.7\times \frac{Q}{S}+M)\times (H\times f_1+V)\times \frac{g}{1{,}000}+1.1\times M\times (H\times f_1-V)\times \frac{g}{1{,}000}$ $kW=\frac{S}{52.2\times \eta}\times\{T-M\times (V-H\times f_1)\times \frac{g}{1{,}000}\}$
	Conveys by scraping (Continuous flow conveyor, scraper conveyor, etc.)	Bulk	$T=16.7\times \frac{Q}{S}\times (H\times f_2+V)\times \frac{g}{1{,}000}+M\times (H\times f_1+V)\times \frac{g}{1{,}000}+1.1\times M\times (H\times f_1-V)\times \frac{g}{1{,}000}$ $kW=\frac{S}{52.2\times \eta}\times\{T-M\times (V-H\times f_1)\times \frac{g}{1{,}000}\}$
	Note: If the results of H × f_1 - V and/or V -H × f_1 are less than zero, adopt zero for those values.		

* About 15% power loss was estimated and included in the value 52.2 used in the above formulas.

Coefficient of Friction

Value of coefficient of friction f_1

Table 1
Coefficient of friction for chains with rollers running on guide rails

Note: 1. The value may depend on the service temperature, etc.
2. The listed values are for ambient temperature.

Roller dia.	With lubrication	Without lubrication
D＜50	0.15	0.20
50≦D＜65	0.14	0.19
65≦D＜75	0.13	0.18
75≦D＜100	0.12	0.17
100≦D	0.11	0.16
Without rollers (when bushings slide on a rail)	0.2～0.3	0.30～0.45
Rollers with built-in bearings	0.035～0.050	

Table 2
Coefficient of friction for chains with plates sliding on guide rails

Temperature (°C)	With lubrication	Without lubrication
Ambient temperature ~ 400	0.20	0.30
400～600	0.30	0.35
600～800	0.35	0.40
800～1000	—	0.45

Value of coefficient of friction f_2

Table 3
Coefficient of friction with loads and bottom and/ or side plates

Note: f_2 value is changed by the condition of grading and/ or humidity.

Load to be conveyed	f_2
Coal	0.30～0.70
Coke	0.35～0.70
Ash	0.45～0.65
Sand	0.55～0.90
Sandstone	0.55～0.70
Ore	0.45～0.70
Cement	0.60～0.75
Cereal	0.35～0.45
Limestone	0.35～0.55

Safety Factor and Determination of Chain Size

Multiply the chain tension calculated in 5-1-2 by the safety factor corresponding to the chain speed and by the service factor to obtain the required strength of the chain. If the calculated strength does not satisfy chain tensile strength, select a chain one step higher in strength, or a strong type chain, and re-calculate.

Select a chain size that fulfills the following condition:

Average tensile strength ＞
Calculated chain tension × Ks × Ke

The service factor under good service conditions is set as 1.0. Refer to the table on the right for other service conditions. The values are given considering possible shock loads, service environment, lubrication condition, service time per day, etc.

(Reference) Good service conditions refer to the following:

1. The load is mostly constant and uniform.
2. There are no shock loads when loading and unloading.
3. Service environment is good. (Close to ambient temperature without abrasive or corrosive factors)
4. Minimal wear due to appropriate lubrication.

Safety factor by chain speed Ks

Chain speed	Safety factor Ks
30m/min or less	7 or more
30～40m/min	8 or more
40～50m/min	9 or more
50～60m/min	10 or more

Service factor Ke

	Service factor Ke	
	Service time per day	
	10 hours or less	10~24 hours
Good	1.0	1.2
Fair	1.2	1.4
Bad	1.5～2.0	1.8～2.5

In any special environment (when the temperature of chain is higher than 200°C, wet, abrasive, corrosive articles are conveyed or etc.), the environment must be carefully examined when determining chain size. Consult us in such cases.

Examples of Calculation for Selection

Selection case Ⅰ

A powder is horizontally scraped to be conveyed by a scraper conveyor.

Specifications

Conveyor type	Scraper conveyor
Max. conveyance capacity	Q =100 ton/h
Conveyance speed	S = 20 m/min
Horizontal center distance between sprocket shafts	L = 30 m
Scraper installation intervals	600 mm
Weight of traveling components	M =W_1+W_2
Weight of scraper	W_1=30 kg/m
Weight of chain	W_2

Note: Estimate W_2 as 20kg/m/strand for the initial calculation.

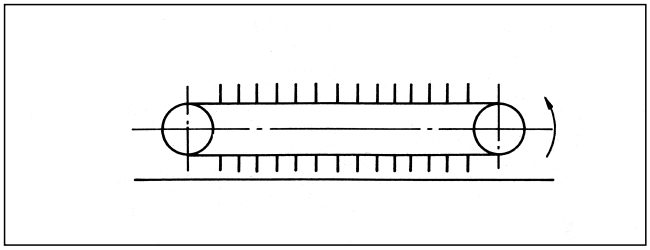

Coefficient of friction between chain and guide rail	f_1=0.2
Coefficient of friction between conveyed articles and bottom plate or side plate	f_2=0.6
Number of chain strands	2 strands

Calculation

Apply the formula for horizontal conveyance by scraping shown in the table on P333.

$$\text{Max. chain tension } T=(16.7\times\frac{Q}{S}\times f_2+2.1\times M\times f_1)\times L\times\frac{g}{1{,}000}$$

$$\text{Required power } kW=\frac{T\times S}{52.2\times\eta}$$

When the values of the above specifications are applied to these formulas,

$$T=(16.7\times\frac{100}{20}\times 0.6+2.1\times 50\times 0.2)\times 30\times\frac{9.80665}{1{,}000}$$
$$=21\text{ kN}$$

The value of T obtained here is a tension acting on two strands. So, the chain tension per strand is T/2.
Since the conveyance speed (chain speed) is 20 m/min the safety factor Ks is 7 from the table of P334.
Furthermore, for an 8-hour operation per day with no lubrication, the service factor Ke is 1.5 from the table on P334.

$$\text{Required chain strength}=\frac{21}{2}\times 7\times 1.5=110\text{ kN}$$

Therefore, Standard Conveyor Chain DK11150F standard can be tentatively selected as it satisfies the average tensile strength.
Then, an accurate calculation can be done with the actual weight of the selected chain.
This chain has Attachment A2 for every four links. From the dimension tables on P229, the dimensions for the components are as follows:

Chain weight : 7.9 kg/m
Attachment weight : 0.24 kg/pc.
Attachment installation intervals : 0.6 m
Hence,

$$\text{Weight of chain}=7.90+\frac{0.24}{0.60}=8.3\text{ kg/m/strand}$$

$$\text{Weight of traveling parts } M=30+8.3\times 2=46.6\text{ kg/m}$$

Therefore, the maximum working chain tension is

$$T=(16.7\times\frac{100}{20}\times 0.6+2.1\times 46.6\times 0.2)\times 30\times\frac{9.80665}{1{,}000}$$
$$=20.5\text{ kN}$$

The chain tension per strand is

$$\frac{20.5}{2}\times 7\times 1.5=108\text{ kN}<112\text{ kN}$$

Hence, the chain size to be selected is DK11150F-4PA2 standard.

$$\text{Conveyor chain safety factor } Sf=\frac{112\times 2}{20.5}=11$$

Required power (when the mechanical transmission efficiency of drive is 0.8) is

$$kW=\frac{20.5\times 20}{52.2\times 0.8}=9.8\text{ kW}$$

Selection case Ⅱ

A conveyor chain for bucket elevator conveying a powder vertically using buckets.

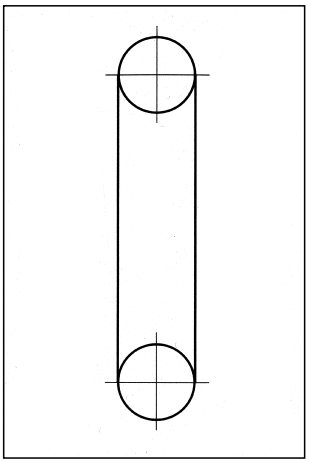

Specifications

Conveyor type	Guide discharge type bucket elevator
Max. conveyance capacity	Q= 250 ton/h
Conveyance speed	S= 25 m/min
Horizontal center distance between sprocket shafts	L= 20 m
Weight of bucket	W_1= 60 kg/m
Weight of chain	W_2

(Estimate W_2 as 20kg/m/strand for the initial calculation.)

Bucket installation intervals	500 mm
Chain pitch	250 mm
Number of chain strands	2 strands

Calculation

Apply the formula for horizontal conveyance by scraping shown in the table on P333.

Weight of traveling components per 1m $M=W_1+2\times W_2=60+2\times 20=100$kg/m

$$\text{Max. chain tension } T=(16.7\times\frac{Q}{S}+M)\times(L+2)\times\frac{g}{1{,}000}$$

$$\text{Required power } kW=\frac{T\times(L+2)}{320\times\eta}$$

When the values of the above specifications are applied to these formulas.

$$T=(16.7\times\frac{250}{25}+100)\times(20+2)\times\frac{9.80665}{1{,}000}$$

$$=57.6\text{ kN}$$

The value of T obtained here is a tension acting on two chain strands. So, the chain tension per stands is T/2.
Since the conveyance speed (chain speed) is 25 m/min the safety factor Ks is 7 from the table of P334.
Furthermore, for an 12-hour operation per day with no lubrication, engendered by poor environment, the service factor Ke is 1.8 from the table on P333.

$$\text{Required chain strength}=\frac{57.6}{2}\times 7\times 1.8=362.9\text{ kN}$$

Therefore, NE Bucket Elevator Chain DK35Z250M can be tentatively selected as it satisfies the average tensile strength.
Then, an accurate calculation can be done with the actual weight of the selected chain.
Since the weight of this chain with Attachment G4 on every two links is 15kg from the dimension table on P287,

Weight of traveling components $M=60+15\times 2=90$ kg/m

Therefore, the maximum working chain tension is

$$T=(16.7\times\frac{250}{25}+90)\times(20+2)\times\frac{9.80665}{1{,}000}$$
$$=55.4\text{ kN}$$

The chain tension per chain strand is

$$\frac{55.4}{2}\times 7\times 1.8=349\text{ kN}<392\text{ kN}$$

Hence, the chain size to be selected is DK35Z250M-2PG4.

$$\text{Conveyor chain safety factor } Sf=\frac{392\times 2}{55.4}=14$$

Required power (when the mechanical transmission efficiency of drive is 0.8)

$$kW=\frac{55.4\times 25}{52.2\times 0.8}=33.2\text{ kW}$$

Allowable Loads of Rollers and Attachments

Allowable Load of Rollers

When selecting a chain for conveyors carrying loads on them, the allowable load of rollers must be taken into account. The allowable load per roller under good service conditions is as shown in the following table.
When using A attachment, use a roller with an allowable load smaller than that of the attachment.
The tensile strength of the rail must be 400N/min² (41kgf/mm²) or more.

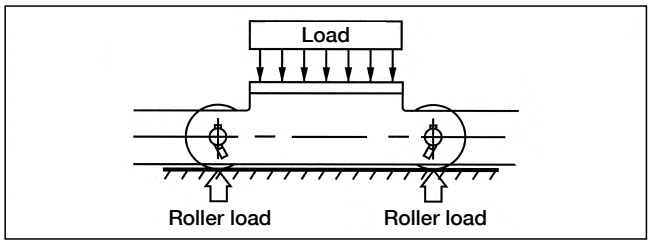

Allowable Load of Standard A attachment

Vertical loads from the weight of loads and slats etc. are applied on A attachment. The allowable vertical load per attachment is as shown in the following table.
When the load is received by the rollers, use a roller with an allowable load smaller than that of the attachment.

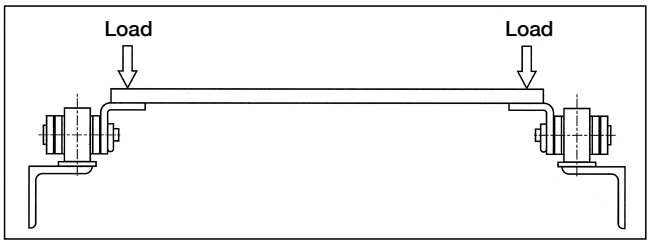

Allowable load of roller

Unit: kN (kgf)/(1) roller

Chain No.	R, F-roller		S, M-roller	
	Standard (J)	Standard (A) Heavy-duty	Standard	Heavy-duty
DK 03075 ※1 DK 03100 ※1 DK 03125 ※1 DK 03150 ※1	0.53 (55)	0.88 (90)	0.53 (55)	
DK 07075 ※1 DK 07100 ※1 DK 07125 DK 07150	0.98 (100)	1.56 (160)	0.98 (100)	
DK 09100 DK 09125 DK 09150	1.37 (140)	2.25 (230)	1.47 (150)	
DK 11100 DK 11125 DK 11150 DK 11200	1.76 (180)	2.94 (300)	1.96 (200)	
DK 13150 DK 13200	2.45 (250)	4.11 (420)	2.45 (250)	
DK 19200 DK 19250 DK 19300	2.45 (250)	4.11 (420)	2.74 (280)	
DK 25200 DK 25250 DK 25300	4.31 (440)	7.15 (730)	4.51 (460)	
DK 32200 DK 32250 DK 32300 DK 32450	5.39 (550)	8.92 (910)	5.58 (570)	
DK 50250 DK 50300 DK 50450 DK 50600	7.45 (760)	12.3 (1,260)	7.45 (760)	
DK 65300 DK 65450	8.92 (910)	14.8 (1,510)	9.31 (950)	
DK 05101 ※1 ※2	0.98 (100)	1.66 (170)	1.17 (120)	
DK 08066 ※3 DK 08101	1.27 (130)	2.15 (220)	1.27 (130)	
DK 09101 ※2	1.56 (160)	2.54 (260)	1.56 (160)	
DK 11152	1.66 (170)	2.84 (290)	1.66 (170)	
DK 13101 ※2	2.05 (210)	3.43 (350)	2.05 (210)	
DK 19152	2.45 (250)	4.02 (410)	2.74 (280)	
DK 25152	3.04 (310)	5.09 (520)	3.23 (330)	

Allowable load of A attachment

Unit: kN (kgf)/(1) attachment

Chain No.	Standard (J, A)	Heavy-duty
DK 03075	0.78 (80)	1.17 (120)
DK 03100	0.83 (85)	1.27 (130)
DK 03125	0.98 (100)	1.47 (150)
DK 03150	1.07 (110)	1.66 (170)
DK 07075	1.07 (110)	1.76 (180)
DK 07100	1.17 (120)	1.86 (190)
DK 07125	1.37 (140)	2.15 (220)
DK 07150	1.56 (160)	2.45 (250)
DK 09100	1.76 (180)	3.23 (290)
DK 09125	2.05 (210)	3.23 (330)
DK 09150	2.25 (230)	3.62 (370)
DK 11100	1.56 (160)	2.54 (260)
DK 11125	1.86 (190)	2.94 (300)
DK 11150	2.05 (210)	3.33 (340)
DK 11200	2.25 (230)	3.72 (380)
DK 13150	2.94 (300)	4.70 (480)
DK 13200	3.62 (370)	5.78 (590)
DK 19200	3.92 (400)	6.27 (640)
DK 19250	5.58 (570)	8.91 (910)
DK 19300	7.25 (740)	11.56 (1,180)
DK 25200	4.21 (430)	6.27 (640)
DK 25250	5.97 (610)	8.91 (910)
DK 25300	7.74 (790)	11.56 (1,180)
DK 32200	3.92 (400)	5.78 (590)
DK 32250	5.58 (570)	8.23 (840)
DK 32300	7.15 (730)	11.66 (1,190)
DK 32450	10.78 (1,100)	15.97 (1,630)
DK 50250	4.31 (440)	4.31 (440)
DK 50300	5.58 (570)	5.58 (570)
DK 50450	8.42 (860)	8.42 (860)
DK 50600	10.38 (1,060)	10.38 (1,060)
DK 65300	6.37 (650)	6.37 (650)
DK 65450	10.38 (1,060)	10.38 (1,060)
DK 05101	1.37 (140)	2.25 (230)
DK 08066	0.98 (100)	1.56 (160)
DK 08101	1.76 (180)	2.74 (280)
DK 09101	1.86 (190)	3.03 (310)
DK 11152	2.05 (210)	3.33 (340)
DK 13101	3.13 (320)	4.99 (510)
DK 19152	3.33 (340)	5.29 (540)
DK 25152	4.21 (430)	6.27 (640)

Note: ※1 : M-roller is not available. ※2 : F-roller is not available. ※3 : R-roller is not available.

Property of Loads and Recommended Chains

The following table shows chain specifications for loads in general. A specific powder or granular material belonging to the same category in the following table may differ in physical properties, depending on the place of production, manufacturer, grain form, storage condition, supply condition, temperature, humidity, etc. Confirm all the properties of the specific load when selecting the conveyor type and chain.

	Loads	Properties				Recommended conveyor type					Recommended chain spec
		Apparent specific gravity	Wear	Corrosion	Adhesion	Bucket elevator	Continuous flow conveyor	Drag chain conveyor	Scraper conveyor	Pan conveyor	
Metal, ore and dust	Iron ore powder	1.6～2.4	○			○	○	○		○	K
	Iron ore lumps	1.6～2.6	○			○	○	○		○	K
	Zinc ore	1.6～2.6	○			○	○			○	K
	Zinc dust	0.4～0.6				○	○			○	A
	Manganese ore (powder)	1.3～1.5	○			○	○			○	K
	Nickel ore (powder)	0.9～1.2	○			○	○			○	K
	Copper ore (powder)	1.0～1.9	○	○		○	○			○	K
	Iron sulfide ore (powder)	1.5～2.5	○	○	○	○	○			○	K
	Bauxite	0.9～1.3	○			○	○			○	K
	Alumina	0.4～1.0	○			○	○			○	K
	Titanium oxide (lumps) (powder)	0.6～1.0	○			○	○			○	K
	Sintered ore	1.6～1.8	○			○	○			○	K
	Re-sintered ore	1.6～1.8	○			○	○			○	K
	Iron ore pellets	1.6～2.1	○			○	○	○		○	K
	Slag	1.0～1.2	○			○	○	○		○	K
	Casting bed dust	1.0～1.5	○			○	○			○	K
	Sintered dust	0.6～1.5	○			○	○			○	K
	Kiln exhaust gas dust	0.8～1.2	○			○	○			○	K
	Iron oxide dust	0.3～0.6	○			○	○			○	K
Coal	Coal (grains)	0.5～1.0		○		○	○	○	○	○	SH
	Coal (lumps)	0.6～0.7		○		○	○	○	○	○	SH
	Pulverized coal	0.5～0.8		○	○	○	○		○	○	SH
	Coke	0.5～0.8	○			○	○			○	K
	Powdery coke	0.3～0.8	○		○	○	○			○	K
Waste	Fuel oil ash	0.6～1.0		○		○	○		○	○	D1
	Sludge ash	0.6～0.8				○	○		○	○	A
	Refuse ash	0.4～0.8				○	○		○	○	A
	Wet refuse			○					○	○	D1
Cement and lime	Cement	0.8～1.2				○	○			○	A
	Blast furnace cement	0.8～1.2	○			○	○			○	K
	Cement raw material powder	0.8～1.0				○	○			○	A
	Cement clinker	1.2～1.6	○			○	○	○	○	○	K
	Cement cottrell dust	0.7～1.0				○	○			○	A
	Clinker dust	0.6～1.2	○		○	○	○			○	K
	Limestone (lumps)	1.2～1.6	○			○	○	○	○	○	A
	Limestone (grains)	1.0～1.4				○	○		○	○	A
	Limestone (powder)	0.9～1.0				○	○			○	A
	Limestone dust	0.5～0.6				○	○			○	A
	Quick lime	0.7～1.2				○	○		○	○	A
	Slaked lime	0.4～0.7				○	○		○	○	A
Non-metal	Dolomite	1.5～1.8	○			○	○	○	○	○	K
	Calcium carbonate	0.5～1.4				○	○			○	A
	Silica sand	1.1～1.5	○			○	○			○	K
	Silica rock	1.0～1.5	○			○	○			○	K
	Clay (dry)	1.0～1.6	○		○	○	○	○	○	○	D2
	Clay dust	1.1～1.6	○		○	○	○			○	D2
	Fluorite	1.7～1.8				○	○		○	○	A
	Gypsum	0.6～0.9		○	○	○	○		○	○	D2
	Talc	0.5～0.7			○	○	○		○	○	A
	Feld spar	1.0～1.4	○			○	○		○	○	K

	Loads	Properties				Recommended conveyor type					Recommended chain spec
		Apparent specific gravity	Wear	Corrosion	Adhesion	Bucket elevator	Continuous flow conveyor	Drag chain conveyor	Scraper conveyor	Pan conveyor	
Non-metal	Bentonite	0.6～0.8	○			○	○		○	○	A
	Fly ash	0.7～1.6	○			○	○			○	K
	Magnesia clinker	1.3～1.9	○			○	○	○	○	○	K
	Brick stone scraps	1.3～1.5	○			○	○	○		○	K
	Soda ash (dense)	0.9～1.1				○	○		○	○	A
	Soda ash (light)	0.3～0.6			○	○	○		○	○	A
	Casting sand	1.5～1.8	○		○	○	○	○	○	○	K
	Crushed stone and gravel	1.2～2.0	○			○				○	K
	Raw material of ferrite	0.7～0.9			○	○	○		○	○	A
	Porcelain clay	0.9～1.4	○			○	○		○	○	K
	Carbide	0.6～1.3				○	○		○	○	A
	Urea	0.5～0.8		○	○	○	○		○	○	S4
	Glauber's salt	0.6～0.9		○	○		○			○	S4
	Anhydrous sodium sulfate	1.1～1.3		○		○	○			○	S4
	Sulfur powder	0.8～1.0				○	○			○	A
	Cullet	1.3～1.7	○			○				○	K
	PVC powder	0.5～0.7				○	○			○	A
	Plastic powder	0.5～0.6				○	○			○	A
	Synthetic detergent	0.5～0.6			○	○	○		○	○	A
	Carbon black	0.1～0.4	○		○	○	○		○	○	K
	Fine powder carbon	0.2～0.3	○		○	○	○		○	○	K
	Rubber powder	0.3～0.4				○	○			○	A
	Wood chips	0.1～0.3				○	○		○	○	A
	Raw materials of agricultural chemicals	0.4～0.6	○	○	○	○	○			○	SH
	Phosphorus ore (powder)	0.9～1.5	○			○	○			○	K
	Phosphorus ore (lumps)	1.1～1.6	○			○	○			○	K
Fertilizer	Phosphorus sulfide (powder)	0.7～1.0				○	○		○	○	A
	Ammonium phosphate	0.9～1.2			○	○	○		○	○	A
	Ammonium chloride (powder)	0.5～0.7		○	○	○	○		○	○	A
	Ammonium chloride (grains)	0.6～0.9		○		○	○		○	○	A
	Ammonium sulfate	0.8～1.2		○	○	○	○		○	○	A
	Potassium sulfate	0.5～1.3		○	○	○			○	○	SH
	Potassium chloride	0.7～1.0		○	○	○			○	○	SH
	Lime nitrogen	0.8～1.3	○			○	○		○	○	SH
	Calcium superphosphate	0.8～1.0		○	○				○	○	SH
	Compound fertilizer	0.7～1.2		○	○	○	○		○	○	SH
	Fused phosphate	1.0～1.3	○			○	○		○	○	K
Cereal, food and feed	Rice	0.7～0.8				○	○		○	○	A
	Barley	0.6～0.7				○	○		○	○	A
	Wheat	0.7～0.8				○	○		○	○	A
	Wheat flour	0.4～0.7			○	○	○		○	○	A
	Soybean	0.7～0.8	○			○	○		○	○	A
	Corn	0.7～1.0				○	○		○	○	A
	Malt	0.9～1.0				○	○		○	○	A
	Starch	0.4～0.7			○	○	○		○	○	A
	Sugercane	0.2～0.3							○	○	A
	Bagasse	0.1～0.2			○				○	○	A
	Sugar	0.8～1.0			○	○	○		○	○	S4 S3
	Salt (dry)	0.9～1.3		○	○	○	○		○	○	A
	Mixed feed	0.4～0.6		○		○	○		○	○	A

Note: 1. For the symbols of recommended chain versions, see P223.
2. If the conveyed articles are food, please state that effect.

Corrosion Resistance Against Various Substances

This table shows experimental data on the corrosion resistance of chains to various substances, and is not to guarantee chain performance. When selecting a chain, examine all aspects including service conditions, temperature, and load concentration.

Corrosion of metal

When a metal is exposed to a corrosive environment, various phenomena occur. Above all, stress corrosion cracking, hydrogen embrittlement cracking, pitting corrosion etc. can cause serious accidents, and sufficient preventive measures must be taken.

1) Stress corrosion cracking

Stress corrosion cracking occurs when corrosive action and static stress work simultaneously. When a metal is gradually affected as in ordinary corrosion, the timing of replacement can be relatively easy to predict. However, stress corrosion cracking causes sudden brittle fracture, and is a serious problem.

In general, most industrial alloys may crack in any environment. The corrosive materials most likely to cause stress corrosion cracking are chlorine and chlorine ion ($C\ell^-$).

Cathodic polarization can be used to prevent cracking or to slowdown the progression of cracking.

2) Hydrogen embrittlement cracking

Sudden cracking may occur if processes like acid cleaning, plating, or welding are not followed by sufficient post-treatment, or if a metal is used in an acidic environment. This is because the hydrogen produced by acidic corrosion permeates and embrittles the metal. This is called "hydrogen embrittlement cracking".

Though difficult to distinguish from stress corrosion cracking, in hydrogen embrittlement cracking, the entire metal is embrittled, baking allows recovery from embrittlement, and cracking can be prevented by anodic polarization.

3) Pitting corrosion

Corrosion is concentrated locally on a surface of a metal, increasing only the depth and forming corroded holes. This phenomenon is called pitting corrosion. Under conditions causing general corrosion, pitting corrosion is not common, but is one of the most damaging corrosion types especially for stainless steel. Specifically, when pitting corrosion occurs at an area receiving tensile stress, strength is extremely lowered in the worst case.

Medium	Standard	High guard	Double guard	Stainless steel	
				S4	S3
Aceton	×	○	○	○	○
Sulfurous gas (wet)	×	×	×	×	○
Sulfurous gas (dry)	—	△	△	—	○
Ammonia gas (cool)	—	○	○	—	○
Ammonia gas (hot)	×	△	△	×	×
Ammonia water	△	×	○	○	○
Ethanol	○	○	○	○	○
Sodium chloride, salt	×	○	○	×	△
Hydrochloric acid	×	×	△(pH3)	×	×
Chlorine gas (wet)	×	×	×	×	×
Sea water	×	○	○	×	△
Hydrogen peroxide	×	○	○	△	△
Caustic soda (20%)	×	×	○	○	○
Gasoline	○	○	○	○	○
Potassium permanganate	△	○	○	△	○
Formic acid	×	×	×	×	×
Milk	○	○	○	○	○
Citric acid	×	×	△(pH3)	○	○
Glycerin	△	○	○	△	○
Acetic acid (10%)	×	×	△	△	○
Bleaching powder, sodium hypochlorite	×	△	△	×	×
Carbon tetrachloride (dry)	△	○	○	△	△
Alcoholic soap (10%)	×	△	△	△	△
Oxalic acid (5%)	×	△	△	△	△
Oxalic acid (10%, boiled)	×	×	×	×	×
Nitric acid (10%)	×	×	×	△	○
Vinegar	×	○	○	×	△
Calcium hypochlorite	×	△	△	×	×
Baking soda	○	△	○	○	○
Water	×	○	○	○	○
Calcium hydroxide	△	×	×	○	○
Phenic acid, Phenol	×	×	×	△	△
Petroleum	○	○	○	○	○
Soapwater	△	○	○	○	○
Carbonic water	○	○	○	○	○
Sodium carbonate	○	○	○	○	○
Kerosene	○	○	○	○	○
Lactic acid (5%)	×	○	○	×	○
Lactic acid (10%, 65°C)	×	○	○	×	△
Paraffin	○	○	○	○	○
Beer	○	○	○	○	○
Benzene, benzol	○	○	○	○	○
Boric acid (5%)	×	×	×	○	○
Pottasium alum	×	×	×	×	△
Methanol	○	○	○	○	○
Iodine	×	×	×	×	×
Butyric acid	×	—	—	—	△
Sulfuric acid	×	×	×	×	×
Phosphoric acid (10%)	×	×	×	×	△
Sodium sulfate (5%)	△	○	○	○	○
Wine	○	○	○	○	○

Note: 1. ○: Corrosion resistant,
△: Corrosion resistant depending on conditions,
×: No resistance
2. Unless specified, tests were conducted at 20 °C.

Rust Prevention of DK Conveyor Chain

DK Conveyor Chains are coated with a rust prevention oil diluted by light oil (we call it "P oil") unless otherwise specified. Rust prevention by P oil is effective for two to three months indoors. Specify NP-2, a rust prevention oil diluted by JIS solvent, for a longer effect when using chains for export or installation work etc. For a sewage chain low in operation frequency, considering corrosion resistance during service as well, a more adhesive tarry rust preventing oil NP-1 (JIS standard) is recommended. Our rust prevention oils are listed below. Note that lubricating effect cannot be expected from these oils, and that chain lubrication is required irrespective of their use.

Rust prevention type	Features	Application
P oil	Rust prevention oil diluted by light oil	For general use
NP-2	JIS rust prevention oil with a thicker film than P oil	For export
NP-1	A more abrasive tarry JIS rust preventive oil	For sewage chain, etc.
NP-19	Transparent semi-drying powerful JIS rust prevention oil	For spare chain parts
Coating	Contact us concerning a specific application	

〈Reference〉

Stainless steels

Stainless steels can be classified into four types, austenitic stainless steel, ferritic stainless steel, martensitic stainless steel, and quench hardened stainless steel.

Classification and features of stainless steels

	Austenitic stainless steel	Ferritic stainless steel	Martensitic stainless steel	Quench hardened stainless steel
Name	18Cr-8Ni stainless steel	18Cr stainless steel	13Cr stainless steel	17Cr-4Ni stainless steel
Typical grade steel	SUS 304 SUS 316	SUS 430	SUS 403 SUS 410 SUS 420 SUS 431	SUS 630
Heat treatment and features	All the alloy elements are melted into the base metal at a temperature higher than 1000°C, and the mixture is quenched. (Solution treatment) The steel is excellent in corrosion resistance and high enough in ductility to be cold-worked.	Not hardened. Since it is as soft as pure iron, it is not suitable for applications requiring strength. It is rather poor also in corrosion resistance, but since it is inexpensive, it is used instead of austenitic stainless steel.	Like ordinary steel, it is hardened and tempered. Since it is as hard as ordinary steel, it is often used. However, it is slightly poor in corrosion resistance.	Like austenitic steel, this is solution-treated, but later aging-treated to partially quench alloying ingredients for hardening, to raise the strength. It is excellent in both strength and corrosion resistance.
Corrosion resistance	High	Low	Low	Medium
Hardness	Low	Low	High	High
Viscosity	Large	Large	Large for the hardness	Large
Wear resistance	Low	Low	Large	Large
Cautions	Intergranular corrosion, pitting corrosion, stress corrosion cracking	Sigma embrittlement 475 °C embrittlement	Hydrogen embrittlement cracking	
Applications	Various chemical equipment High quality tableware	Stainless steel sinks Light corrosion resistant parts	Cutting tools, Mechanical parts with high hardness	Mechanical parts with high strength and high corrosion resistance

SUS304, a typical austenitic stainless steel, is considered to be non-magnetic, but when used in chains, since it is cold-worked and extensively processed to achieve high-strength, it is slightly magnetic. Since the magnetism is extremely weak compared to that of iron and steel, the chain can be used for ordinary applications without any problem. However, consult us for an application very sensitive to magnetism such as the production of electronic parts.

Installation, Adjustment and Maintenance

Installation of Sprockets

The installation accuracy of sprockets greatly affects the service life of equipment and conveyor chain. Even if they are accurately installed, vibration during operation, land subsidence, etc. may cause deviation. In such cases, the teeth of sprockets are worn laterally and/or the conveyor chain is damaged. Misalignment, parallel measurement and other checks must be conducted from time to time.

Levelness

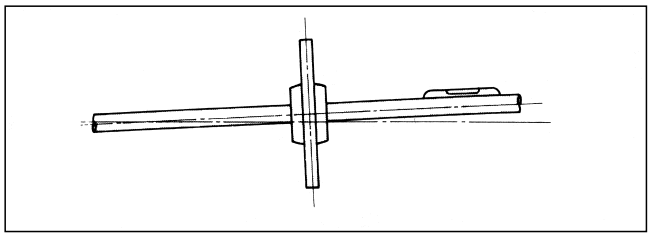

Using a level, adjust the levelness as specified below.

Flow conveyor : $\frac{\pm 0.5\text{mm}}{1\text{m}}$ or less

Bucket conveyor : $\frac{\pm 0.5\text{mm}}{1\text{m}}$ or less

Long pan conveyor : $\frac{\pm 0.5\text{mm}}{1\text{m}}$ or less

Slat conveyor : $\frac{\pm 1.0\text{mm}}{1\text{m}}$ or less

Deviation of sprocket from conveyor chain center line

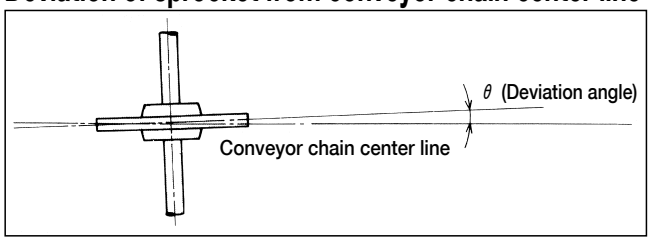

Adjust to eliminate deviation from the conveyor chain center line.

Misalignment of sprockets

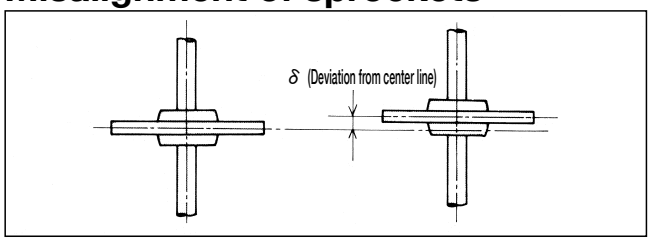

Adjust to align the driving and driven sprockets as specified below.

Flow conveyor : δ = 1mm or less
Bucket conveyor : δ = 2mm or less
Long pan conveyor : δ = 1mm or less
Slat conveyor : δ = 1mm or less
(3 mm or less for strong type chain 120H, 120Z or larger)

Conveyor Chain Connection Procedure

As the general connection procedure for conveyor chain, take steps 1 through 4 below. For disconnection, reverse the steps.

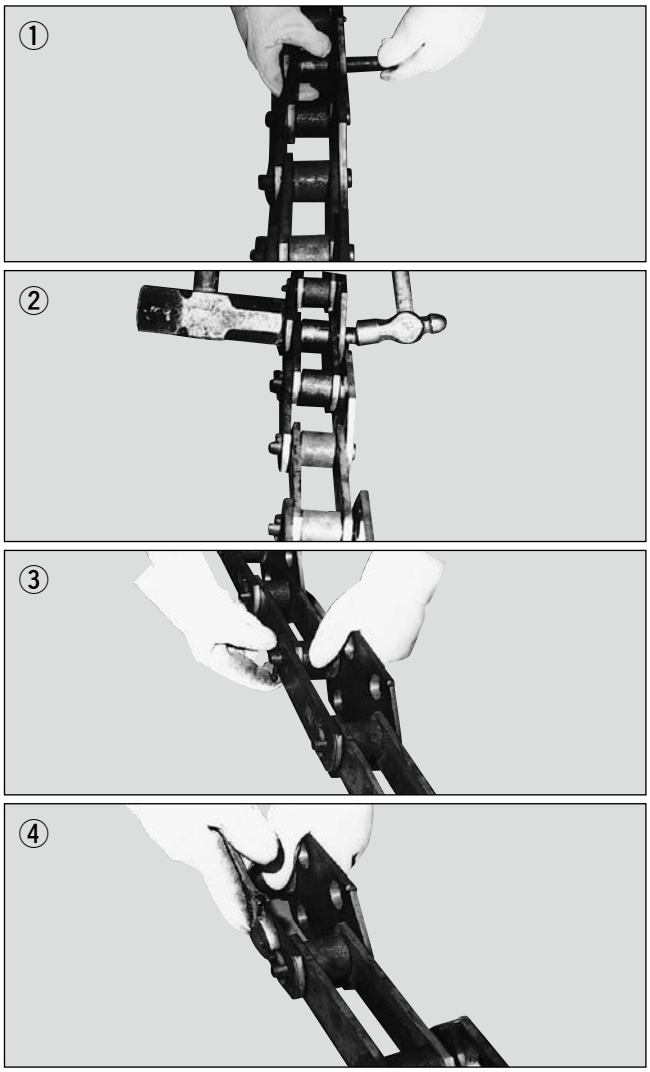

1. Pull out the pin from one end of the chain, and place the chain in alignment with the pin holes of the inner and outer plates. (Photo 1)
2. Insert the pin into the plate hole. (Photo 1)
3. Apply one hammer to the back of the plate on the other side, and insert the pin by hitting it with another hammer. (Photo 2)
4. Insert a T-pin into the pin hole, and bend it by a wrench etc. to secure it in position. (Photo 3 and 4)

(Cautions)

1. Confirm the feeding direction of the chain, the positions of attachments etc. before connecting.
2. When hammering in the pin, do not grind the pin to make the process easier. A ground pin will cause various troubles.
3. After completion of chain connection, confirm whether the chain can bend smoothly.

Tension Adjustment of Conveyor Chain

Overly tight or sagged conveyor chain cannot be smoothly operated. Especially, an overly sagged chain rides over sprockets and interferes with the rail, etc. So, check chain condition at appropriate timing and adjust the chain for proper operation.

Timing of Adjustment

At the beginning of operation, a chain causes initial elongation, and subsequently is elongated due to steady wear. Usually the components of a chain are hardened on the surface, and if the hardened layer is exhausted, elongation progresses rapidly. So, periodical checks are necessary.

● Check frequency for 8-hour per day operation

Within one week after start up of operation	Once daily
Within one month after start up of operation	Once weekly
One month after start up of operation	Twice monthly

This table shows a general case. In the case of continuous operation, operation in abrasive or corrosive environments, increase the check frequency.

(Cautions)

- Also for a chain with tension automatically adjusted by counter weight take-up or spring take-up, confirm whether the tension device functions properly.
- When high-temperature articles are conveyed, be sure to adjust the take-up since the chain expands or contracts remarkably when the conveyor is started or stopped.

Adjust Take-up by Two People

The take-up adjustment must be performed equally on both sides. So, one person is required to check the tension of chain, while the other carries out adjustment. For adjustment, alternate tension on both sides little by little. When chain is tensioned too tightly on one side only, accidents are caused. Be sure to position the chain at the centers of the teeth of the sprockets. When the chain is not positioned at the centers of teeth, adjust by tightening the side with a clearance between the sprocket and the chain, or loosen the side where the sprocket is in contact with the chain.

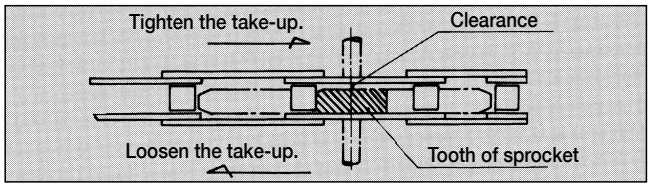

Shorten the Chain Before Elongation Limit

The chain tension is adjusted by take-up. However, cut short the chain before the elongation comes close to the limit. An overly sagged chain causes troubles due to interference and contact.

Check Point

Chains sag generally at one place. Therefore, confirm at first what point of the conveyor should be checked. Furthermore, ensure the safety of the area to be checked.

- With a horizontal conveyor, irrespective of top or bottom conveyance, the sagging is usually eliminated on the chain return side at a portion immediately after or downstream of the driving sprocket.
- With a straight gradient conveyor, the point where the sagging is eliminated depends on the gradient angle and the kind of conveyor, so refer to the instruction manual, etc.
- With an L-type or S-type conveyor, sagging is eliminated at the bend case.

Tension Adjusting Degree

The degree of tension adjustment is determined with reference to the following conditions.

- The chain smoothly departs from the sprockets.
- Spaces are secured to keep the chain, attachments, pans, etc. from interfering with the rail and frames.
- Appropriate tension is given to prevent surging.

For example, for a horizontal continuous flow conveyor, adjust the sag depth to about δ = L /10 ~ L /20.

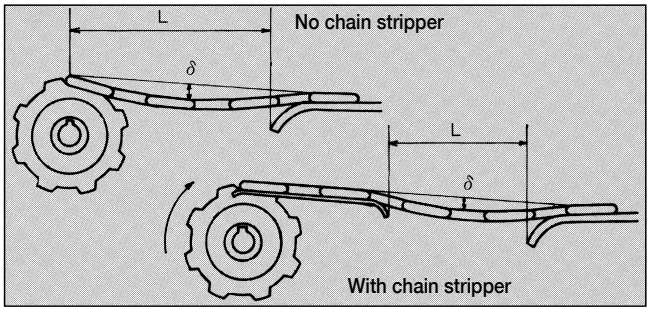

However, in the following cases, increase the adjusting frequency and set to δ = L /15 ~ L /25.

- Intermittent operation of conveyors
- High-temperature loads
- High chain speed (25m/min or more)
- Heavy and/or large chains

With L-type continuous flow conveyor, adjust the tension to keep the chain directly visible from the inspection hole. The dimension is $\ell \fallingdotseq$L/2.

Overly tight or sagged chains may cause accidents.

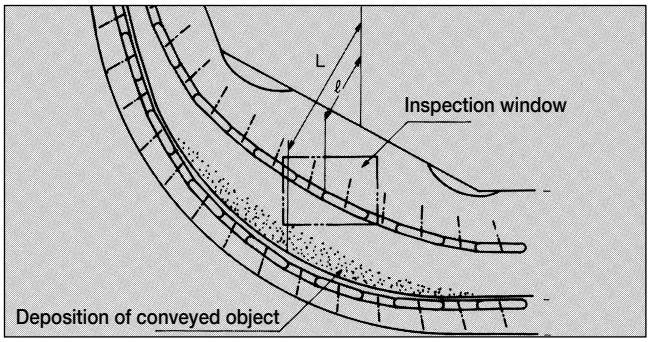

On the bottom of case, the conveyed articles are often deposited. So, periodically clean the inside, to secure space for slackening of chain.

Lubrication

To extend the life of chain, periodical lubrication is important. However, in the following cases, avoid lubrication.

1) The chain is embedded in the loads (granular material, powder, etc.).
2) Granular material and powder deposit on the chain when carried by pan or apron conveyors. Here, lubrication works adversely.
3) The chain temperature becomes high.

● Lubricating oils and lubrication frequency

ISO VG	Temperature
100	-10°C ~ 0°C
150	0°C ~ 40°C

In general, lubricate once a week by applying or dripping.

Service Limits of Conveyor Chain and Sprockets

■ Service limit of conveyor chain

Conveyor chain performance gradually deteriorates by wear, corrosion, etc. depending on service conditions. The service limits of respective components are as stated below.

● R-rollers and F-rollers

When the plates begin to contact the rail due to inside and outside wear of rollers.

● S-rollers and M-rollers

When rollers are partially cracked or thickness becomes 40% of the original dimension due to wear.

● Bushings

When the thickness of bushings become 40% of the original dimension due to wear.

● Plates

Service limit of plate thickness :

When plate thickness decreases down to 1/3 of the original dimension due to mutual abrasion or contact with rollers.

Service limit of plate width :

When the plates directly slide on liners, the plates are worn in width, and strength is diminished.

In this case, X=1/8B is the service limit.

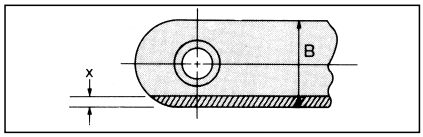

● Oblong pin-and bushing-fitted portions.

Pins and bushings are securely locked and pressed in plates. Long-term use or an overload loosens the portions where pins and bushings are fitted.

In this case, the plate holes become gradually oblong causing sudden progression of chain elongation. This is the service limit.

● Pitch elongation

A chain is bent when it engages with the sprockets or at corners, and the mutual wear between pins and bushings causes the entire length to be elongated. If the elongation becomes excessive, the engagement between the chain and the sprockets becomes less smooth and troubles occur.

Limit of chain elongation is 2 % of nominal pitch.

Measure chain elongation where tension is applied. Usually, measure from the head of one pin to the head of another, using a tape measure. Measure the length of four pitches or more.

● Fatigue limit

A chain receives varying loads repetitively every cycle. Long-term use causes plates, pins, etc. to reach their fatigue limit, resulting in cracking and then fracture. This is the service limit.

■ Service Limit of Sprocket

The wear of sprocket teeth is generally neglected. It is difficult to measure the wear loss and repair by padding is troublesome and diminishes operation efficiency. However, check teeth wear since it promotes wear elongation of the chain.

The wear limit is 3~5mm.

A sprocket reaching the service limit should be repaired according to a padding gauge or replaced entirely.

When a sprocket is replaced, pay attention to hub and key slot dimensions, etc.

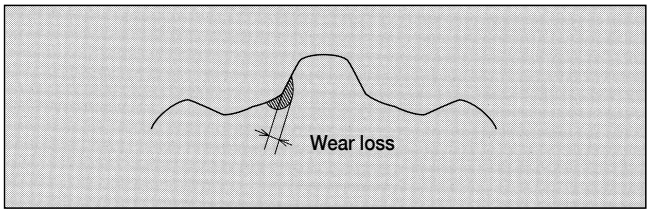

● Welding rod for padding

In general, select a welding rod of HV350 ~ HV600 in deposited metal hardness from JIS No.DF2B-B according to the degree of wear loss. However, note that if the hardness is about HV600, finishing is difficult.

When wear loss is extensive, use welding rod D4316 for underlaying.

● Teeth gauge for padding

Accurate finishing by a grinder using a teeth gauge is necessary when padding. Consult us for gauges.

Inquiry Sheet (for Conveyor Chain)

When placing an order or inquiring, please fill in the following information.
Use additional sheets when necessary.

Number of attached sheets:[ ]

Name	Date of inquiry: Year Month Day
Company name	Department
Address 〒	TEL ( ) FAX ( )
Machine concerned	Manufacturer
Chain currently used	Manufacturer

Conveyed material	Detail	
	Corrosiveness	With / without ( )
	Abrasiveness	With / without ( )
	Adhesion	With / without ( )
	Temperature	Room temperature C
	Dimensions･Mass	kg/pc.
Service conditions	Conveyed quantity	Countable articles: max kg Bulk material: max t / hr
	Machine length	m
	Lifting height	m
	Conveyance speed	m / min
	Number of chain strands	( ).Strands (interval m)
	Conveying method	Top loading / Lifting / Sliding / Pushing by dogs Horizontal / Vertical / Slope Other ( )
	Operating hours	Hr / day (days/year)
	Operation method	Continuous / Intermittent / Back and forth
	Service atmosphere	High temperature (℃) / Low temperature (℃) / Water splash / Submerged

Service conditions	Place of installation	Indoor / outdoor ( )
	Lubrication	Delivery: With / without ( ) During use: Impossible / Possible (Frequency) Kind: Manual / Drip / Other ( )
	Motor used	AC / DC kW× rpm× unit (s)
	Chain pitch	mm
	Average tensile strength	kN (kgf)
Chain	Roller type	S / M / R / F / Special ( )
	Attachments	Installation intervals: Every links (every mm) A( )/ K( )/ G( )/ SA( )/ SK( ) Special ( )
	Mirror arranged attachments	Yes / No
	Sliding parts	Rollers / Plates / Other ( )
Sprocket	Number of teeth of driving side	NT (PCD mm)
	Number of teeth of driven side	NT (PCD mm) / Tail drum
	Shaft hole diameter	ϕ Tolerance: H7 / H8 / Other ( )
	Hub form	Type (A / B / C) ϕ × L
	Key groove	No / Yes Demensions: ANSI: b Xt( ) Parallel or Tapered
	Tooth Finish	Precision fusion cutting / Mechanical toothed wheel cutting / Induction hardening / Hard facing

Notes and machine layout

Please indicate in detail the form of conveyor, loading and unloading methods, forms of attachments and rails, installation method on the return side, etc.
Describe the maximum chain tension if it is known.
Also indicate any problems of the machine and chain in current use.
Inquiry sheet is also provided on our website below.
http://www.did-daido.co.jp

Glossary

Terms such as average tensile strength, minimum tensile strength, maximum allowable tension, and table of maximum horsepower ratings are important terms that indicate the performance of chains, and are often used in the text and table of chain dimensions in this catalog. Frequently used terms are explained below.

1. Average tensile strength

We conduct a test where a chain is pulled at both ends with a gradually increasing load until it breaks. The maximum load in this case is called the tensile strength of the chain. The average tensile strength is obtained by repeating this test. Since the average tensile strength is not a guaranteed value, it cannot be used for calculation of safety factor.

2. DID minimum tensile strength

This is our guaranteed tensile strength. Therefore, our chains all have tensile strengths exceeding this value. Use it for strength calculations such as to obtain safety factor. This value is decided on the conservative side, based on statistical processing of numerous tensile strength data and experience.

3. JIS minimum tensile strength

This is the strength value required for a chain conforming to JIS B 1801.

4. Maximum allowable tension

"Slow-speed selection" (P123) is a method for selecting chains that uses the maximum allowable tension for the criterion of safety. The maximum allowable tension is decided on the more conservative side than the fatigue limit. Fatigue fracture * will not occur if a load less than this value is repeatedly applied.

5. Table of maximum horesepower ratings

A chain is usually selected according to the "General selection" method (P122) which uses the maximum horsepower rating for the criterion of safety. As shown on P122, the maximum horsepower rating shows the power which can be transmitted when the chain is operated under an ideal condition. The maximum horsepower ratings were obtained by actually operating chains in a test facility under good lubrication condition without vibration or shock.

International System of Units (SI)

The international system of units has been in use since Oct. 1, 1999. The units in our catalogue include SI units and old units. Use the values in old units as reference.

SI unit

	SI Indication	SI Conversion
Weight	Kg (kilogram)	
Power	N (newton)	1kN=1000N (kilonewton) $1kN=\frac{1,000}{9.8}kgf$
Torque moment	N·m (newtonmeter)	
Stress (pressure)	Pa (pascal)	$1Pa=\frac{1}{1,000,000}N/mm^2$ (pascal) $=\frac{1}{10,000}N/cm^2$ 1MPa=1000kPa (megapascal) 1kPa =1000Pa (kilopascal) 1hPa =100Pa (hectopascal)
Work energy	J (joule)	1N·m=1J (joule)
Work rate	S (second)	1W=1J/s=1N·m/s (watt)

SI Calculations Using SI Units

1. Relation of torque, transmission power and rpm

$$T=\frac{1000\times P}{2\pi n_s}=\frac{60000\times P}{2\pi n_m}$$

T : Torque (N·m)
P : Transmission power (kW)
n_s : rpm (s^{-1})
n_m : rpm (min^{-1})

2. Relation of required power, power and speed

$$P=\frac{F\times V}{1000\times \eta}$$

P : Required power (kW)
F : Power (N)
V : Speed (m/s)
η : Efficiency

3. Relation of rotating unit break torque and downtime

$$T=\frac{I\times 2\pi n_s}{t}=\frac{I\times 2\pi n_m}{60t}$$

T : Break torque (N·m)
I : Inertia moment ($kg\cdot m^2$)
n_s : rpm (s^{-1})
n_m : rpm (min^{-1})
t : Downtime (s)

Factory:
DAIDO KOGYO CO., LTD.
I-197, Kumasaka-machi, Kaga-shi, Ishikawa, 922-8686, Japan
http://www.did-coltd.com/english/

Tokyo Office
3-5-4, Nihombashi ningyo-cho, Chuo-ku, Tokyo, 103-0013, Japan
Phone +81-3-3808-0785 Fax +81-3-5695-7146

Osaka Office
2-12-12, Minamisemba, Chuo-ku Osaka-shi, Osaka, 542-0081, Japan
Phone +81-6-6251-2027 Fax +81-6-6258-3230

Distributed by

Note) To consistently improve our products, the specifications in this catalog are subject to change without notice.

PRINTED WITH SOY INK
Trademark of American Soybean Association

© DAIDO KOGYO CO.,LTD. JAN.2014 143A06-B
Printed in Japan